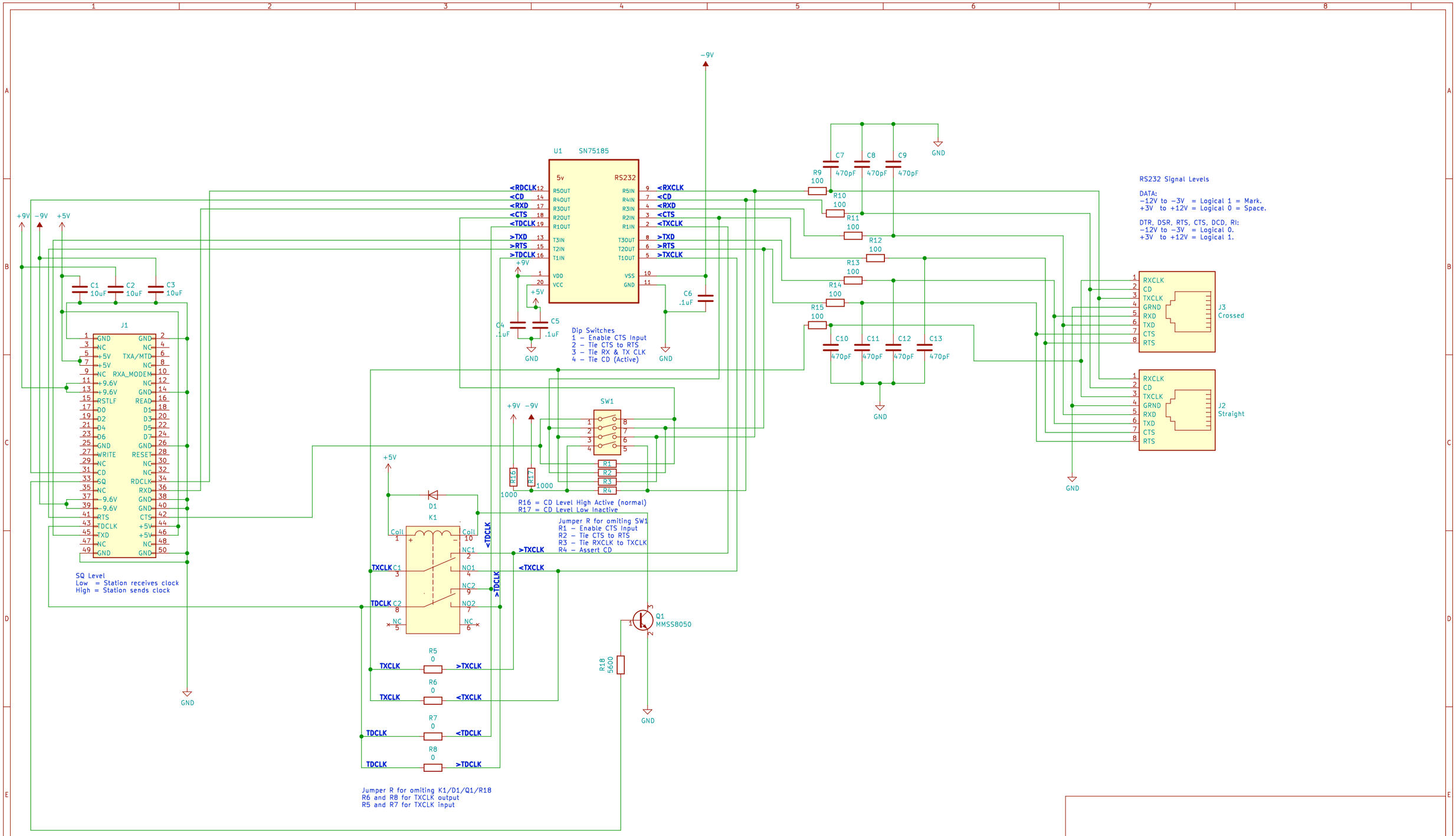

Bryan Fields

Sheet: /

File: v.24 board.sch

Title: Quantar V.24 Converter

Size: USLedger	Date: 2024-05-22	**Rev: 2024-05-22**
KiCad E.D.A. kicad (5.1.0-0)		Id: 1/1