SERVICE MANUAL

4945A
TRANSMISSION IMPAIRMENT MEASURING SET

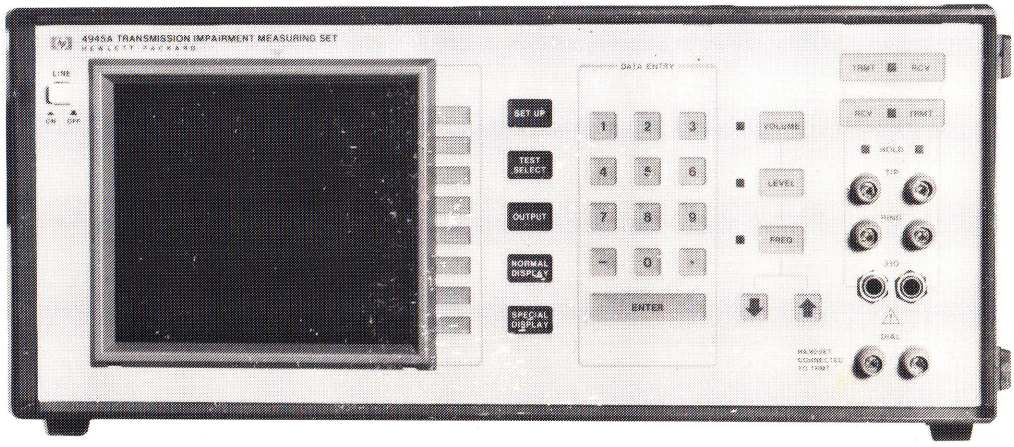

HEWLETT PACKARD

HP 4945A

SAFETY

This product has been designed and tested according to International Safety Requirements. To ensure safe operation and to keep the product safe, the information, cautions, and warnings in this manual must be heeded. Refer to Section I and the Safety Summary for general safety considerations applicable to this product.

CERTIFICATION

Hewlett-Packard Company certifies that this product met its published specifications at the time of shipment from the factory. Hewlett-Packard further certifies that its calibration measurements are traceable to the United States National Bureau of Standards, to the extent allowed by the Bureau's calibration facility, and to the calibration facilities of other International Standards Organization members.

WARRANTY

This Hewlett-Packard product is warranted against defects in material and workmanship for a period of one year from date of shipment. During the warranty period, Hewlett-Packard Company will, at its option, either repair or replace products which prove to be defective.

The cathode-ray tube (CRT) in the instrument and any replacement CRT purchased from HP are also warranted against electrical failure for a period of one year from the date of shipment from Colorado Springs. BROKEN TUBES AND TUBES WITH PHOSPHOR OR MESH BURNS, HOWEVER, ARE NOT INCLUDED UNDER THIS WARRANTY.

For warranty service or repair, this product must be returned to a service facility designated by HP. However, warranty service for products installed by HP and certain other products designated by HP will be performed at Buyer's facility at no charge within the HP service travel area. Outside HP service travel areas, warranty service will be performed at Buyer's facility only upon HP's prior agreement and Buyer shall pay HP's round trip travel expenses.

For products returned to HP for warranty service, Buyer shall prepay shipping charges to HP and HP shall pay shipping charges to return the product to Buyer. However, Buyer shall pay all shipping charges, duties, and taxes for products returned to HP from another country.

LIMITATION OF WARRANTY

The foregoing warranty shall not apply to defects resulting from improper or inadequate maintenance by Buyer. Buyer-supplied software or interfacing, unauthorized modification or misuse, operation outside of the environmental specifications for the product, or improper site preparation or maintenance.

NO OTHER WARRANTY IS EXPRESSED OR IMPLIED. HP SPECIFICALLY DISCLAIMS THE IMPLIED WARRANTIES OF MERCHANTABILITY AND FITNESS FOR A PARTICULAR PURPOSE.

EXCLUSIVE REMEDIES

THE REMEDIES PROVIDED HEREIN ARE BUYER'S SOLE AND EXCLUSIVE REMEDIES. HP SHALL NOT BE LIABLE FOR ANY DIRECT, INDIRECT, SPECIAL, INCIDENTAL, OR CONSEQUENTIAL DAMAGES, WHETHER BASED ON CONTRACT, TORT, OR ANY OTHER LEGAL THEORY.

ASSISTANCE

Product maintenance agreements and other customer assistance agreements are available for Hewlett-Packard products.

For any assistance, contact your nearest Hewlett-Packard Sales and Service Office.

SERVICE MANUAL

4945A

TRANSMISSION IMPAIRMENT MEASUREMENT SET

SERIAL NUMBERS

This manual applies directly to instruments with serial numbers prefixed 2344A.

For additional important information about serial numbers, see INSTRUMENTS COVERED BY MANUAL in Section I.

COPYRIGHT HEWLETT-PACKARD CO./COLORADO TELECOMMUNICATIONS DIVISION 1983
5070 CENTENNIAL BLVD., P.O. BOX 7050, COLORADO SPRINGS, CO. 80933

ALL RIGHTS RESERVED

Manual Part No: 04945-90005

Includes: Printed Pages - 5957-4423
Binder - 9282-1018

Microfiche Part No: 5957-4424

Operating and Programming Manual Part No: 04945-90001

Printed: November, 1983

SAFETY SUMMARY

The following general safety precautions must be observed during all phases of operation, service, and repair of this instrument. Failure to comply with these precautions or with specific warnings elsewhere in this manual violates safety standards of design, manufacture, and intended use of the instrument. Hewlett-Packard Company assumes no liability for the customer's failure to comply with these requirements.

GROUND THE INSTRUMENT.

To minimize shock hazard, the instrument chassis and cabinet must be connected to an electrical ground. The instrument is equipped with a three-conductor ac power cable. The power cable must either be plugged into an approved three-contact electrical outlet or used with a three-contact to two-contact adapter with the grounding wire (green) firmly connected to an electrical ground (safety ground) at the power outlet. The power jack and mating plug of the power cable meet International Electrotechnical Commission (IEC) safety standards.

DO NOT OPERATE IN AN EXPLOSIVE ATMOSPHERE.

Do not operate the instrument in the presence of flammable gases or fumes. Operation of any electrical instrument in such an environment constitutes a definite safety hazard.

KEEP AWAY FROM LIVE CIRCUITS.

Operating personnel must not remove instrument covers. Component replacement and internal adjustments must be made by qualified maintenance personnel. Do not replace components with power cable connected. Under certain conditions, dangerous voltages may exist even with the power cable removed. To avoid injuries, always disconnect power and discharge circuits before touching them.

DO NOT SERVICE OR ADJUST ALONE.

Do not attempt internal service or adjustment unless another person, capable of rendering first aid and resuscitation, is present.

USE CAUTION WHEN EXPOSING OR HANDLING THE CRT.

Breakage of the Cathode-ray Tube (CRT) causes a high-velocity scattering of glass fragments (implosion). To prevent CRT implosion, avoid rough handling or jarring of the instrument. Handling of the CRT shall be done only by qualified maintenance personnel using approved safety mask and gloves.

DO NOT SUBSTITUTE PARTS OR MODIFY INSTRUMENT.

Because of the danger of introducing additional hazards, do not install substitute parts or perform any unauthorized modification of the instrument. Return the instrument to a Hewlett-Packard Sales and Service Office for service and repair to ensure that safety features are maintained.

DANGEROUS PROCEDURE WARNINGS.

Warnings, such as the example below, precede potentially dangerous procedures throughout this manual. Instructions contained in the warnings must be followed.

WARNING

Dangerous voltages, capable of causing death, are present in this instrument. Use extreme caution when handling, testing, and adjusting.

U.S.A. ONLY

The Federal Communications Commission (in 47 CFR 15.818) has specified that the following notice be brought to the attention of the users of this product. This notice does not indicate a change of Hewlett-Packard's normal quality standards or testing program.

FEDERAL COMMUNICATIONS COMMISSION RADIO FREQUENCY INTERFERENCE STATEMENT

Attention: This equipment generates, uses, and can radiate radio frequency energy and if not installed and used in accordance with the instructions manual, may cause interference to radio communications. It has been tested with a Class A computing device and found to comply with the limits for a Class A computer peripheral device pursuant to Subpart J of Part 15 of FCC Rules, which are designed to provide reasonable protection against such interference when operated in a commercial environment. Operation of this equipment in a residential area is likely to cause interference in which case the user at his own expense will be required to take whatever measures may be required to correct the interference.

If this equipment does cause interference to radio or television reception, which can be determined by turning the equipment off and on, the user is encouraged to try to correct the interference by one or more of the following measures:

Reorient the receiving antenna.

Relocate the computer with respect to the receiver.

Move the computer away from the receiver.

Plug the computer into a different outlet so that computer and receiver are on different branch circuits.

If necessary, the user should consult the dealer or an experienced radio/television technician for additional suggestions. The user may find the following booklet prepared by the Federal Communications Commission helpful:

"How to Identify and Resolve Radio-TV Interference Problems".

This booklet is available from the U.S. Government Printing Office, Washington, DC 20402, Stock No. 004-000-00345-4.

IEC SYMBOLS

The following is a list of key IEC symbols used by Hewlett-Packard. All symbols are normally applied adjacent to the device requiring the symbol. They shall not be placed on removable parts likely to be detached or lost.

Instruction Manual symbol: If necessary, to preserve the apparatus from damage it is necessary for the user to refer to the instruction manual, then shall the apparatus be marked with this symbol (IEC 348;16a).

Terminal devices fed from the interior by live voltages that may be dangerous when connecting to or disconnecting from those devices shall be marked with the flash shown when the voltage exceeds 1 KV: The flash shall be red (IEC 348;18c).

Earth Terminals. If the use of this symbol for the protective earth terminal is not permitted by National Standards, it may be modified, for example, by being placed inside a circle (IEC 348;18a).

AC current (IEC 117-1, symbol No. 3).

DC current (IEC 117-1, symbol No. 2).

AC or DC current (IEC 117-1, symbol No. 8).

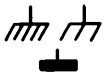

Frame or chassis connection. The hatching may be completely or partly omitted if there is no ambiguity. If the hatching is omitted, the line representing the frame or chassis shall be thicker (IEC 117-1, symbol No. 87).

A — Ampere (IEC 117-4, symbol No. 356).

V — Volt (IEC 117-4, symbol No. 357).

VA — Voltampere (IEC 117-4, symbol No. 358).

W — Watt (IEC 117-4, symbol No. 360).

Wh — Watthour (IEC 117-4, symbol No. 361).

VAh — Voltamperehour (IEC 117-4, symbol No. 362).

Hz — Hertz (IEC 117-4, symbol No. 365).

Contactor, normally closed. In order to avoid confusion with the symbol for a capacitor, the distance between the horizontal (as drawn here) lines should be at least equal to the length of those lines (IEC 117-3, symbol No. 215.2).

In addition the following describes the use of Warnings, Cautions and Notes used in HP Automatic Test System Manuals.

Warnings, cautions and notes. (All) Warnings and cautions shall precede the text to which each applies but notes may precede or follow applicable text depending on the material to be highlighted. Warnings, cautions, and notes shall not contain procedural steps nor shall they be numbered. When a warning, caution, or note consists of two or more paragraphs, the heading WARNING, CAUTION, NOTE, shall not be repeated above each paragraph. If it is ever necessary to precede a paragraph by both a warning and a note, or a caution and a note, etc, they shall appear in the sequence as noted, namely, warnings, cautions, notes. Such inserts in the text shall be short and concise and be used to emphasize important and critical instructions.

WARNING

An operating procedure, practice, etc, which, if not correctly followed, could result in personal injury or loss of life.

CAUTION

An operating procedure, practice, etc. which, if not strictly observed, could result in damage to, or destruction of, equipment.

NOTE: An operating procedure, condition, etc. which it is essential to highlight.

Health hazards precaution data. (All) When hazardous chemicals or adverse health factors, in the environment or use of the equipment cannot be eliminated, appropriate precautionary requirements shall be included.

TABLE OF CONTENTS

SECTION I: GENERAL INFORMATION Page

1-1. Introduction 1-1
1-2. Description 1-2
1-3. Safety Considerations 1-2
1-4. Instruments Covered By This Manual 1-3
1-5. Interfaces 1-3
1-6. Accessories Supplied 1-3
1-7. Accessories Available 1-4
1-8. Options 1-4
1-9. Specifications 1-4
1-10. Recommended Test Equipment 1-13
1-11. Service Kit 1-14
1-12. Cleaning and Handling Precautions..... 1-15

SECTION II: INSTALLATION

2-1. Introduction 2-1
2-2. Initial Inspection 2-1
2-3. Power Requirements 2-1
2-4. Power Cable 2-3
2-5. Operating Environment 2-5
2-6. Packaging 2-5

SECTION III: OPERATION

Refer to the 4945A Operating and Programming Manual.

TABLE OF CONTENTS (con't)

SECTION IV: PERFORMANCE TESTS Page

4-1. Introduction 4-1
4-2. Power-On Self Check..... 4-1
4 3. Recommended Test Equipment and Accessories..... 4-2
4-4. Transmitter Level and Frequency Test..... 4-3
4-5. Transmitter Level Distortion Test..... 4-6
4-6. Transmitter Hold Coil Current Test..... 4-8
4-7. Receiver Hold Coil Current Test..... 4-9
4-8. Receiver Level and Frequency Test.....4-10
4-9. Filter Tests.....4-12
4-10. 50 Kilobit Filter Response Test.....4-13
4-11. 15 kHz Filter Response Test.....4-14
4-12. 3 kHz Filter Response Test.....4-15
4-13. 1010 Hz Notch and 15 kHz Filter Response Test.....4-16
4-14. Program Filter Response Test.....4-17
4-15. C-Message Filter Response Test.....4-18
4-16. Receiver Passive Return Loss Test.....4-19
4-17. Transmitter Passive Return Loss Test.....4-21
4-18. Transmitter Longitudinal Balance Test.....4-22
4-19. Receiver Balance.....4-25
4-20. Noise To Ground Test.....4-28
4-21. Message Circuit Noise (No Holding Tone).....4-30
4-22. Noise With Tone (Notch Noise).....4-31
4-23. Intermodulation Distortion.....4-33
4-24. Peak-To-Average Ratio.....4-35
4-25. Amplitude Jitter.....4-36
4-26. Phase Jitter.....4-41
4-27. Phase Hits.....4-46
4-28. Gain Hits.....4-48
4-29. Dropouts.....4-50
4-30. Impulse Noise.....4-52
4-31. Envelope Delay Tests.....4-56
4-32. Transmitter Amplitude Modulation.....4-56
4-33. Transmitter Modulation Frequency.....4-58
4-34. Transmitter Level and Flatness.....4-59
4-35. Envelope Delay Receiver Test.....4-61
4-36 Two Return Loss.....4-62
4-37. Four-Wire Return Loss.....4-64
4-38. Receiver Holding Circuit Impedance.....4-66

SECTION V: ADJUSTMENTS

		Page
5-1.	Introduction	5-1
5-2.	Safety Considerations	5-1
5-3.	Power Supply Adjustments	5-4
5-4.	Frequency Adjustment	5-4
5-5.	+V1 Adjustment (+5 volt)	5-5
5-6.	+V2 Adjustment (+18 volt)	5-6
5-7.	+V4 Adjustment	5-6
5-8.	-V5 Adjustment	5-6
5-9.	Using the Power Supply Test Fixture	5-7
5-10.	Transmitter Adjustments	5-7
5-11.	Level Accuracy	5-7
5-12.	NLD Tone Balance and Level (Primary Method)	5-7
5-13.	NLD Balance (Alternate Method)	5-8
5-14.	Alternate Channel Level (Primary Method)	5-8
5-15.	Alternate Channel Level (Alternate Method)	5-9
5-16.	Hold Coil Current For Transmitter and Receiver	5-9
5-17.	Receiver Adjustments	5-10
5-18.	Level Accuracy	5-10
5-19.	1010 Hz Notch Filter	5-10
5-20.	P/AR Filter	5-10
5-21.	US EDD Hi-Q Filters	5-11
5-22.	US EDD AGC	5-11
5-23.	Phase Hit Balance	5-11
5-24.	NLD 1990 Hz Detector	5-12
5-25.	NLD 520 Hz Bandpass Filter	5-12
5-26.	Two Wire Return Loss	5-13
5-27.	Real Time Clock Oscillator	5-13
5-28.	Display Adjustments	5-14
5-29.	Yoke Adjustment	5-15

SECTION VI: REPLACEABLE PARTS

6-1.	Introduction	6-1
6-2.	Exchange Assemblies	6-1
6-3.	Abbreviations	6-1
6-4.	Ordering Information	6-1
6-5.	Direct Mail Order System	6-2
6-6.	Torques For Hardware	6-4
6-7.	Power Supply Removal	6-5
6-8.	CRT Removal	6-11
6-9.	CRT Installation	6-11
6-10.	Front Panel Removal	6-12
6-11.	Front Panel 310 Connector Precaution	6-14
6-12.	Rear Panel Component Access	6-15
6-13.	Replaceable Parts List	6-16

TABLE OF CONTENTS (cont)

SECTION VII: MANUAL CHANGE

Page

7-1. Introduction 7-1

SECTION VIII: SERVICE

8-1. Introduction 8-1
8-2. Safety Considerations 8-1
8-3. Grid Locators 8-2
8-4. Logic Symbology 8-3
8-5. Transmission Impairment Measurements 8-6
8-6. Service Sheet Organization 8-13
8-7. Block Diagram Description 8-13
8-8. Power-On Self Check 8-20
8-9. Power-On Self Check Troubleshooting 8-24
8-10. Keycode Troubleshooting 8-31
8-11. Display Troubleshooting 8-33
8-12. Transmitter Troubleshooting (A14, A15) 8-35
8-13. Digital Troubleshooting (Signature Analysis) 8-36
8-14. System Processor SA Theory (A11, A12, A13) 8-38
8-15. Receiver Processor SA Theory (A1 - A10) 8-46
8-16. System Processor SA Tables (A11, A12, A13) 8-51
8-17. Receiver Processor SA Tables (A10, A9, A1 - A8) 8-64
8-18. Interface Troubleshooting 8-80
8-19. Diagnostics 8-91
8-20. Running the Diagnostics 8-93
8-21. Mode 1: Detector Digital and ADC Check (A5).....8-95
8-22. Mode 2: Detector Calibration Check (A5).....8-107
8-23. Mode 3: Basic Transmitter Check (A5, A15).....8-112
8-24. Mode 4: Wideband Autorange Amplifier Check (A14, A15, A17)8-120
8-25. Mode 5: Narrowband Autorange Amplifier Check (A14,15,17)..8-123
8-26. Mode 6: Frequency Counter and Crystal Check, (A14,17,8)...8-127
8-27. Mode 7: Transmitter Single Tone Check (A14, 15, 17, 8)....8-134
8-28. Mode 8: Transmitter Multi-tone Check (A14, A8).....8-141
8-29. Mode 9: Transmitter Filter Sweep (A15) 8-145
8-30. Mode 10: Transmitter Alternate Channel Check (A17).....8-149
8-31. Mode 11: Wideband Filter Calibratiion (A2).....8-154
8-32. Mode 12: A2 Filter Sweeps (A2).....8-155
8-33. Mode 13: A2 Filter Checks Continued (A2).....8-160
8-34. Mode 14: A1 and A18 Check.....8-166
8-35. Mode 15: IMD Hardware Check (A3).....8-170
8-36. Mode 16: IMD Filter Calibration (A3).....8-176
8-37. Mode 17: Jitter Digital and Phase Lock Loop Check (A6)....8-178
8-38. Mode 18: Jitter Calibration (A6).....8-185
8-39. Mode 19: Envelope Delay Hardware Check (A7).....8-195
8-40. Mode 20: Envelope Delay Calibration.....8-203

Page

8-41. Mode 21: Transient Measurements Check (A9).....8-206
8-42. Mode 22: A3 FSK Demodulation Check.....8-214
8-43. Performance Verification and Service Aid Modes.....8-219
8-44. Mode 46: Filter Response Checks 8-219
8-45. Mode 47: DC Offset Settling Time (Narrowband.....8-221
8-46. Mode 48: DC Offset Settling Time (Wideband).....8-221
8-47. Mode 49: Filter Path Check.....8-222
8-48. Mode 50: Super P/AR.....8-223
8-49. Mode 51: Receiver Troubleshooting 8-223
8-50. Mode 52: IMD Relative Tone Adjustment) 8-224
8-51. Processors/Memory Diagnostics Section 8-225
8-52. System Processor (A11) 8-225
8-53. System Memory (A12) 8-235
8-54. Receiver Processor (A10) 8-240
8-55. Front Panel Decoder (A25) 8-244
8-56. Receiver Input (A1) 8-247
8-57. Filter Board (A2) 8-248
8-58. NLD/Modem (A3) 8-253
8-59. Autorange Amplifier (A4) 8-263
8-60. Detector (A5) 8-268
8-61. Jitter (A6).....8-272
8-62. US Envelope Delay (A7) 8-278
8-63. Frequency Coounter (A8) 8-285
8-64. Transients Detector (A9) 8-288
8-65. Transmitter Section 8-293
8-66. Basic Transmitter Description 8-301
8-67. Transmitter Control (A14).....8-301
8-68. Waveform Generator (A15) 8-302
8-69. Active Output 8-308
8-70. Transmitter Output 8-315
8-71. Display Section 8-318
8-72. Video Generator (A13) 8-323
8-73. CRT Driver (A19) 8-323
8-74. Power Supply/Motherboard Section 8-330
8-75. Power Supply (A28, A29) 8-341
8-76. AC Mains Switching (A20) 8-342
8-77. DC Connect Board (A21) 8-349
8-78. Power upply Test Fuxtures 8-349
8-79. I/O Section 8-354
8-80. HP-IB Interface (18162A) 8-357
8-81. RS-232 intrface (18163A).....8-359
8-82. HP-IL Firmware Operation.....8-365
8-83. HP-IL Interface (18165A).....8-371

LIST OF ILLUSTRATIONS

FIGURES Page

1-1. HP Model 4945A TIMS and Supplied Accessories 1-0
2-1. Line Voltage Selector Switch 2-3
5-1. Adjustment Locations 5-1
6-1. 65908A and A21 Access Screws 6-6
6-2. A21 Cables 6-7
6-3. 65909A and A20 Access Screws 6-9
6-4. A20 Cables 6-10
6-5. Front Panel Screws Accessed From Cardcage 6-13
6-6. 310 Connector Installation 6-14
6-7. 4945A Chassis Parts 6-87
6-8. 4945A PC Board Locations 6-88
6-9. 4945A Covers 6-89
8-1. Example Grid Locator 8-2
8-2. Logic Symbology Examples 8-5
8-3. P/AR Transmit Signal Frequency Spectrum 8-9
8-4. P/AR Transmit Signal Envelope 8-9
8-5. 4945A Block Diagram 8-12
8-6. Mode 1 Waveforms 8-106
8-7. Mode 3 Waveforms 8-119
8-8. Mode 6 Waveforms 8-133
8-9. Mode 8 Waveforms 8-144
8-10. Mode 15 Waveforms 8-175
8-11. Mode 17 Waveforms 8-184
8-12. Mode 18 Waveforms 8-194
8-13. Mode 19 Waveforms 8-202
8-14. Mode 21 Waveforms 8-213
8-15. Mode 22 Waveforms 8-218
8-16. 4945A Memory Map 8-227
8-17. A11 System Processor Block Diagram 8-229
8-18. A11 System Processor Schematic Diagram 8-231
8-19. A12 System Memory Block Diagram 8-235
8-20. A12 System Memory Schematic Diagram 8-237
8-21. A10 Receiver Processor Block Diagram 8-241
8-22. A10 Receiver Processor Schematic Diagram 8-243
8-23. A25 Front Panel Decoder Schematic Diagram 8-245
8-24. A1 Receiver Input Block Diagram 8-249
8-25. A1 Receiver Input Schematic Diagram 8-251
8-26. A2 Filter Board Block Diagram 8-259
8-27. A2 Filter Board Schematic Diagram 8-261
8-28. A3 NLD/Modem Board Block Diagram 8-263
8-29. A3 NLD/Modem Board Schematic Diagram 8-265
8-30. A4 Autorange Amplifier Block Diagram 8-269
8-31. A4 Autorange Amplifier Schematic Diagram 8-271
8-32. A5 Detector Block Diagram 8-275
8-33. A5 Detector Schematic Diagram 8-277
8-34. A6 Jitter Board Block Diagram 8-281
8-35. A6 Jitter Board Schematic Diagram 8-283
8-36. A7 Envelope Delay Block Diagram 8-285
8-37. A7 Envelope Delay Schematic Diagram 8-287

FIGURES (con't) Page

8-38. A8 Frequency Counter Block Diagram 8-289
8-39. A8 Frequency Counter Schematic Diagram 8-291
8-40. A9 Transients Detector Block Diagram 8-295
8-41. A9 Transients Detector Schematic Diagram 8-297
8-42. A14 Transmitter Control Block Diagram 8-303
8-43. A14 Transmitter Control Schematic Diagram 8-305
8-44. A15 Waveform Generator Block Diagram 8-309
8-45. A15 Waveform Generator Schematic Diagram 8-311
8-46. A17 Active Output Block Diagram 8-315
8-47. A17 Active Output Schematic Diagram 8-317
8-48. A18 Transmitter Output Block Diagram 8-319
8-49. A18 Transmitter Output Schematic Diagram 8-321
8-50. A13 Video Generator Block Diagram 8-327
8-51. A13 Video Generator Schematic Diagram 8-329
8-52. A19 CRT Driver Block Diagram 8-333
8-53. A19 CRT Driver Schematic Diagram 8-339
8-54. Power Supply Block Diagram 8-345
8-55. 65908A and 65909A Power Supply Schematic Diagram 8-347
8-56. Power Supply AC and DC Interconnection Schematic Diagram 8-349
8-57. Passive Loading Board Schematic Diagram 8-351
8-58. Power Supply Test Fixture Schematic Diagram 8-353
8-59. A18 I/O Interface Connections 8-355
8-60. 18162A HP-IB Interface Schematic Diagram 8-355
8-61. 18163A RS-232 Interface Schematic Diagram 8-358
8-62. 18165A HP-IB Interface Schematic Diagram 8-363
8-63. 18163A RS-232 Interface Schematic Diagram 8-369
8-64. 18165A HP-IL Interface Schematic Diagram....8-375

LIST OF TABLES

TABLES

1-1. Service Kit Contents 1-14
2-1. Line Fuse Part Numbers 2-2
2-2. Power Cable Part Numbers 2-4
5-1. Adjustment Summary 5-2
6-1. Reference Designators and Abbreviations 6-3
6-2. 4945A Replaceable Parts 6-19
6-3. List of Manufacturer's Codes 6-85
8-1. Diagnostic Modes 8-92

PRINTING HISTORY

The printing history below identifies the printing dates of this manual and any updates that are included. Periodically, update packages are distributed which contain write-in corrections and/or replacement pages to be merged into the manual. Each update package includes an updated copy of this printing history page to identify the level of manual update.

Each reprinting of this manual will incorporate all past updates, however, no new information will be added. Thus, the reprinted copy will be identical in content to previous printings with its user-inserted update information.

First Printing .....December, 1983

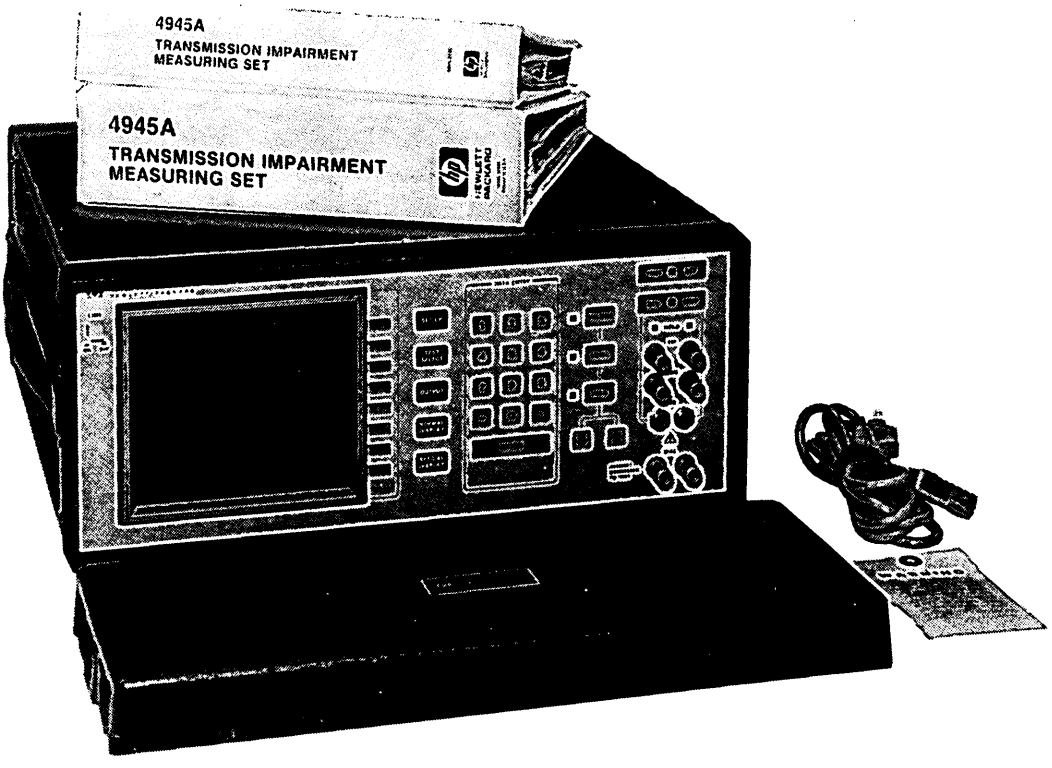

Figure 1-1. HP Model 4945A TIMS and Supplied Accessories

SECTION I
GENERAL INFORMATION

1-1. INTRODUCTION

This manual contains technical information required to install and service the Hewlett-Packard Model 4945A Transmission Impairment Measurement Set. This manual together with the 4945A Operating Manual provides complete documentation for the 4945A.

Figure 1-1 shows the instrument and accessories supplied. Throughout the remainder of this manual, the Model 4945A Transmission Impairment Measurement Set is referred to as the 4945A or the instrument.

This manual is divided into eight sections and contains the following information:

Section I, General Information, identifies the instruments that are documented by this manual. A description of the instrument, the available options and accessories , and the specifications are also included in Section I.

Section II, Installation, provides information about initial inspection, preparation for use, storage, and shipment.

Section III, Operation, references the 4945A Operating Manual which gives detailed operating instructions for the instrument.

Section IV, Performance Test, presents the procedures to check the performance of the instrument.

Section V, Adjustments, provides instructions for properly adjusting the instrument.

Section VI, Replaceable Parts, lists all replaceable parts and assemblies along with ordering information.

Section VII, Manual Changes, contains information necessary to document all serial prefixes listed on the title page of this manual.

Section VIII, Service, provides necessary information to repair the instrument.

The part numbers for the Operating Manual and the Service Manual are listed on the Title Page.

The title page also lists the part numbers for the microfiche version of the Service manual. The microfiche package also includes the latest Manual Changes supplement.

1-2. DESCRIPTION

The Hewlett-Packard 4945A Transmission Impairment Measuring Set is a combination test set used by the telephone industry. The 4945A is used for measuring analog parameters on voice bandwidth data circuits as well as wideband analog program channels and wideband digital channels (DDS). The 4945A frequency range is from 20 Hz to 110 kHz for both the transmitter and receiver.

The 4945A contains all measurements needed for installation, maintenance and troubleshooting. The parameters measured are:

- Level/Frequency
- Message Circuit Noise
- Noise With Tone
- Signal-to-Noise Ratio
- Noise-to-Ground
- Intermodulation Distortion
- Peak-to-Average Ratio
- Phase and Amplitude Jitter
- Phase Hits, Gain Hits, Dropouts
- Impulse Noise
- Envelope Delay
- Return Loss (2 and 4 wire)

The 4945A has a built-in, comprehensive self-check capability.

The Master/Slave feature allows complete control of a slave unit from the master unit over 4-wire circuits.

The 4945A can communicate with an external controller via RS-232C, HP-IB or HP-IL.

1-3. SAFETY CONSIDERATIONS

WARNING

TO PREVENT PERSONAL INJURY, OBSERVE ALL SAFETY PRECAUTIONS AND WARNINGS STATED ON THE IN INSTRUMENT AND IN THE MANUAL. THIS PRODUCT IS A SAFETY CLASS 1 INSTRUMENT (PROVIDED WITH A PROTECTIVE EARTH TERMINAL). THE 4945A AND ALL RELATED DOCUMENTATION MUST BE REVIEWED FOR FAMILIARIZATION WITH SAFETY MARKINGS AND INSTRUCTIONS BEFORE OPERATIONS.

1-4. INSTRUMENTS COVERED BY THIS MANUAL

Attached to the instrument is a serial number plate. The serial number is in the form:0000A00000. It is in two parts: the first four digits and the letter are the serial number prefix and the last five digits are the suffix. The prefix is the same for all identical instruments; it changes only when a change is made to the instrument. The letter in the prefix designates the country in which the instrument was manufactured (A=USA; G=West Germany; J=Japan; S=Singapore). The suffix changes to identify the individual instrument.

The contents of this manual apply to all instruments with the serial number prefix(es) listed under SERIAL NUMBERS on the title page. An instrument manufactured after the printing of this manual may have a serial prefix that is not listed on the title page. This unlisted serial number prefix indicates that the instrument is different from those described in this manual. Manuals accompanying this newer instrument include a Manual Changes supplement. This supplement contains change instructions to adapt the manual to the newer instrument.

For information concerning a serial prefix number that is not listed on the title page contact the nearest Hewlett-Packard Sales and Service office.

1-5. INTERFACES

Three interfaces are available for the 4945A.

- 18162A HP-IB Interface (Option 001)
- 18163A RS-232 Interface (Option 002)
- 18165A HP-IL Interface (Option 003)

There is room for any two of these interfaces on the 4945A rear panel.

Operating information for the interfaces is found in the 4945A Operating Manual (HP Part Number 04945-90001).

Service information for the interfaces is found in the back of this manual.

1-6. ACCESSORIES SUPPLIED

Accessories supplied with the instrument are listed below.

Power Cord 2.3 m (7.5 ft)	Part No. 8120-1378
Operating Manual	Part No. 04945-90001
Service Manual	Part No. 04945-90005
Quick Reference Card	Part No. 04945-90010

The power cable and line fuse are selected at the factory according to the country of destination. Part numbers of the available power cables are listed in Section II.

1-7. ACCESSORIES AVAILABLE

The following accessories are available for the 4945A.

10833A	1 metre HP-IB Cable
13242N	RS-232C Terminal Cable
13242G	RS-232C Modem Cable
15513A	36-inch 310 to 310 Cable
18169A	19-inch Rack Mount Kit
18170A	Soft Carrying Case
82167A	.5 metre HP-IL Cable
9211-2650	Rugged Transit Case

1-8. OPTIONS

Standard options are modifications installed at the factory and can be ordered by contacting a Hewlett-Packard sales office.

1-9. SPECIFICATIONS

GENERAL

Power Requirements:	115/230 Vac +11%/-22%, 48 to 63 Hz. 150 watts maximum.
Dimensions: (excluding feet)	Height: 18.4 cm (7.25 in) Width: 45.1 cm (17.75 in) Depth: 48.9 cm (19.25 in)
Weight:	15 kg (33 lbs)
Operating Environment:	Temperature: 0° to +50°C (+32° to 122°F)
	Humidity: 10% to 90%, non-condensing
	Altitude: up to 4600 m (15,000 ft)
	Warm-up time: 5 minutes for stated accuracy
Interfaces:	HP-IB (IEEE 488), RS-232C, HP-IL
HP-IB Capabilities:	AH1, SH1, C0, L4, T5, SR1, RL1, PP1, DC1, DT0

RS-232C Capabilities:	Bit Rates: 50, 75, 110, 150, 300, 600, 1200, 2400, 4800, 9600 bps. Asynchronous half or full duplex. 7 or 8 bit word. Parity: none, odd, even mark or space.
HP-IL Capabilities:	R, AH, SH, D, T1-T5, L1, AA1, C0, DC2, DT0, PP1, SR2, RL2, PD0, DD0
Termination Impedance: (receiver and transmitter)	135, 600, 900 or 1200 ohm
Hold Circuits:	Two circuits, each independent; > 20 mA for applied open circuit voltages from 42.5 to 105 volts dc, either polarity, through an external resistance of <=1700 ohms. Nominal: 23 mA, 48 V, 1300 ohms.
Return Loss: (receiver and transmitter)	>20 dB from 20 Hz to 110 kHz >30 dB from 800 Hz to 110 kHz at 135 ohms >30 dB from 200 Hz to 20 kHz
Bridging Loss: (receiver)	< 0.2 dB
Longitudinal Balance: (receiver and transmitter)	>90 dB, 50 Hz to 120 Hz decreasing 6 dB per octave above 120 Hz
Maximum dc blocking:	150 volts

Transmitter Frequency

Range:	20 Hz to 110 Hz; selected by keypad or six programmable steps.
Resolution:	1 Hz from 20 Hz to 9999 Hz 10 Hz from 10 kHz to 110 kHz
Accuracy:	± .01 % of output frequency
Sweep:	Automatic or manual from 20 Hz to 110 kHz. Auto sweep is single or repetitive, up or down. Step size programmable 1 Hz to 10 kHz (1 Hz resolution) Sweep rates; .3, 1 or 3 steps per second
SF Skip:	Skips a band from 2450 to 2750 Hz
Holding Tone:	1004 Hz ± 0.1 Hz

Transmitter Level

Range: -60 to +13 dBm (600, 900, 1200 ohm)
-60 to +5 dBm (135 ohm)

Resolution: 0.1 dB

Accuracy: ± 0.1 dB at 1004 Hz, -20 to 0 dBm ± 0.2 dB at 1004 Hz, -60 to +10 dBm

Flatness:

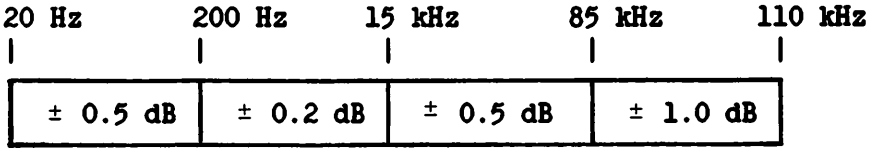

Flatness is not specified below 200 Hz when using the 135 ohm termination.

Total Distortion: 100 Hz to 3 kHz, >= 50 dB down from fundamental, measured in 3 dB bandwidth up to 12 kHz (for signal levels -40 dBm to +10 dBm)

3 kHz to 20 kHz, >=40 dB down from fundamental, measured in 3 dB bandwidth up to 80 kHz (for signal levels -40 dBm to +10 dBm)

20 kHz to 110 kHz, >=40 dB down from fundamental, measured in 3 dB bandwidth up to 440 kHz (for signal levels -30 dBm to +10 dBm)

Receiver Frequency

Range: 20 Hz to 110 kHz

Resolution: 1 Hz from 20 Hz to 9999 Hz 10 Hz from 10 kHz to 110 kHz

Accuracy: for signal levels > -50 dBm at > 20 dB signal-to-noise ratio

1 Hz from 20 Hz to 9999 Hz

10 Hz from 10 kHz to 110 kHz

Receiver Level

Range:	-60 to +13 dBm
Resolution:	.1 dB
Detector:	full wave average
Accuracy (in dB):	-50 dBm to +13 dBm

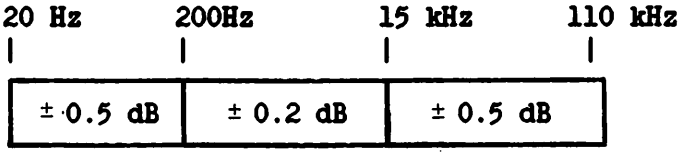

-60 dBm to -50 dBm

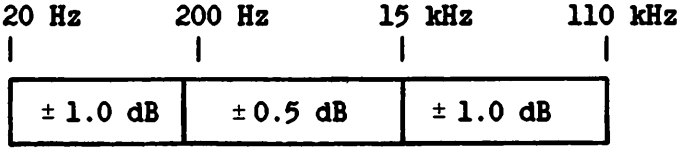

1004 Hz holding tone accuracy is ± 0.1 dB from -20 to 0 dBm

accuracy is not specified below 200 Hz when using the 135 ohm termination

Filters Available: 50 Hz highpass, 10 kHz lowpass

MESSAGE CIRCUIT NOISE MEASUREMENT

Transmitter:	quiet termination

Receiver

Weighting Filters:	C-message, 3 kHz flat, 15 kHz flat, 50 kbit or Program
Range:	+10 to +90 dBrn
Resolution:	1 dB
Accuracy:	± 1 dB
Detector:	True rms

NOISE WITH TONE MEASUREMENT

Transmitter

Frequency:	1004 Hz (fixed)

Receiver

Weighting Filters:	C-message, 3 kHz flat, 15 kHz flat, 50 kbit or Program
Notch Filter:	>60 dB rejection from 995 to 1025 Hz
Range:	+10 to +90 dBrn
Resolution:	1 dB
Detector:	True rms
Accuracy:	± 1 dB

SIGNAL-TO-NOISE MEASUREMENT

Transmitter

Frequency:	1004 Hz (fixed)

Receiver

Weighting Filters:	C-message, 3kHz flat, 15 kHz flat, 50 kbit or Program
Notch Filter:	> 60 dB rejection from 995 to 1025 Hz
Ratio Range:	10 dB to 45 dB
Resolution:	1 dB
Signal level range:	from -40 to +13 dBm
Detector:	full wave average and true rms

NOISE-TO-GROUND MEASUREMENT

Transmitter:	quiet termination

Receiver

Weighting Filters:	C-message, 3 kHz flat, 15 kHz flat 50 kbit or Program
Range:	40 to 130 dBrn (C-Message, 3 kHz) 50 to 130 dBrn (Program, 15 kHz, 50 kbit)
Resolution:	1 dB
Accuracy:	± 1.5 dB
Detector:	True rms

INTERMODULATION DISTORTION MEASUREMENT

Transmitter

Signal Spectrum:	four tone, non-linear distortion
Level Range:	-40 dBm to 0 dBm (not specified at 135 ohms

Receiver

Signal Level Range:	-40 dBm to 0 dBm
Resolution:	1 dB
Accuracy:	± 1 dB
Filters:	Second order centered at 520 Hz and 2240 Hz Third order centered at 1900 Hz
Distortion Range:	10 to 70 dB (not specified at 135 ohms)

PEAK TO AVERAGE RATIO MEASUREMENT (P/AR)

Transmitter

Signal Spectrum:	meets Bell System PUB 41009 specifications
Level Range:	-40 to 0 dBm
Level Resolution:	0.1 dB

Receiver

Signal Level Range:	-40 to 0 dBm
P/AR Range:	0 to 120 units
Accuracy:	± 2 P/AR units over range of 40 to 110 units ± 4 P/AR units elsewhere
Resolution:	1 P/AR unit

PHASE AND AMPLITUDE JITTER MEASUREMENTS

Transmitter

Frequency:	1004 Hz (fixed)

Receiver

Level Range:	-40 to +10 dBm
Bandwidths:	20 to 300 Hz, 4 to 20 Hz and 4 to 300 Hz

Range: Phase (peak to peak) 0 to 40 degrees Amplitude (peak to peak) 0 to 40 %

Accuracy:	Phase: ±.2 deg or ±5% of reading Amplitude: ±.2% abs or ±5% of reading (for received tone of 990 to 1030 Hz, -40 to +10 dBm)
Outputs:	Demodulated carrier and jitter available

TRANSIENTS MEASUREMENT

Transmitter

Frequency:	1004 Hz (fixed) and quiet termination are selectable

Receiver

Holding Tone:	-40 to +10 dBm, 995 to 1025 Hz
Count Rate:	7, 8 or 100 counts per second
Count Range:	0 to 9999 for all count indicators
Timer:	1 to 9,999 minutes, or continuous

Note: the following accuracy specifications apply to the 7 and 8 counts per second rates only.

Impulse Noise:	low, 30 to 110 dBrn in 1 dB steps
Threshhold Range:	medium, programmable, 2, 3, 4, 5 or 6 dB above low
	high, programmable, 2, 3, 4, 5 or 6 dB above medium
Threshold Accuracy:	+- 1 dB
Phase Hits	
Threshold Level:	5 to 45 degrees in 5 degree steps
Threshold Accuracy:	±0.5 degrees, ±10% of threshold setting (10 to 45 degrees)
Gain Hits	
Threshold Range:	2 to 10 dB in 1 dB steps
Threshold Accuracy:	± 0.5 dB
Dropouts	
Threshold:	>=12 dB
Threshold Accuracy:	±1 dB
Duration:	>= 4 milliseconds, ±10%

ENVELOPE DELAY MEASUREMENT

Transmitter	
Level Range:	-40 to 0 dBm
Modulation Frequency:	83 1/3 Hz, ±0.1%
Receiver	
Level Range:	-40 to +10 dBm
Measurement Range:	-3000 to +9000 microseconds
Resolution:	1 microsecond
Accuracy:	± 10 usec from 600 to 4000 Hz ± 30 usec from 300 to 600 Hz

RETURN LOSS MEASUREMENT

Modes:	ERL, SRL-High, SRL-Low and Sine Wave
Two-Wire Return Loss	
Level Range:	-10 to -2 dBm
Measurement Range:	0 dB to 40 dB
Resolution:	0.1 dB
Reference Impedance:	600 or 900 ohms (± 1%) in series with 2.16 microfarads (± 1%), or External
Four-Wire Return Loss	
Transmitter	
Level Range:	-10 to -2 dBm
Receiver	
Range:	0 dB to 50 dB
Accuracy:	± 0.5 dB
Resolution:	0.1 dB
Transhybrid Loss Compensation:	-10 to +30 dB

1-10. RECOMMENDED TEST EQUIPMENT

The following test equipment is recommended to service the 4945A. This equipment is used for the adjustments, troubleshooting and the performance verification tests. Equivalent equipment may be substituted.

- Standard hand tools for electronic PC board repair
- Torque driver: 0 to 50 in. lbs. or a driver to measure 11, 21 and 35 in. lbs. For example, the Lowell, TS-360, 50 in. lbs. driver.

References: A = Adjustment
P = Performance
T = Troubleshooting

Instrument	Specifications	Model	Use
Signature Analyzer/ Multimeter	Multiple logic SA, 20 MHz Clk Freq., Qualifier SA Mode	HP5005A/B	T,P
Oscilloscope	Dual Channel 5 mV or better sensitivity, X vs Y Mode, Sweep Rate 0.5 uSec/div 1000:1 HV probe (HP34111A)	HP1740A	T,P,A
Digital Voltmeter	Accuracy - <= 0.005% Resolution - > 1 uV, 6 1/2 digits, Input impedance > 10 Megohm 50:1 probe (HP10002A)	HP3455A	T,P,A
Universal Counter	Low Freq. Resolution, 7 digits/sec. from 1 Hz to 100 MHz, Sensitivity - 10mV rms from 1 Hz to 10 MHz	HP5315A/B or HP5316A	T,P,A
Spectrum Analyzer	20Hz to 40MHz Range, 0.1 Hz resolution	HP3585A	P,A
Signal Analyzer	20Hz to 100KHz Range, 30 kHz low pass filter with ability to <-50dB distortion in log/ ratio.	HP8903A	P,A
Frequency/Level Synthesizer	200 Hz to 100 kHz range, 0.05 dB Flatness accuracy	HP3336B (Opt005)	T,P,A
Function Generator/ Synthesizer	1 uHz to 20.99 MHz, DC/phase Offset, Amp./Ph. Modulation	HP3325A	T,P,A
Power Supply	Bench Operational, 0 - 320 V	HP6209B	P,A
Attenuator	Balanced 600 Ohm Input/Output Impedance.	HP4436A	P,A
True RMS Voltmeter	DC plus 2Hz to 100MHz Thermopile; Replaces HP3455A Long Period TRMS readings for critical readings	HP3403C	T,P,A
Pulse/Function Generator	10mVpp to 16Vpp, 1mHz to 50MHz	HP8116A	T,P,A
Power Amplifier	+100V to -100V,0 to 40 times Voltage Gain, DC to 15 kHz, 0.1% THD to 100Hz.	HP6827A Opt.009	
Low Frequency Impedance Analyzer	Swept frequency measurement of all Impedance Parameters 5Hz to 13MHz, Synthesizer/Source	HP4192A	T,P,A
Gain/Phase Meter	Dual channel with 0.1 degree accuracy and resolution	HP3575A (Opt 001)	T,P,A
Service Kit	Required for power supply and transmitter distortion	HP-Part No. 04945-62607	T,P,A
Interface Controllers	HP-IB I/O	HP-85A,w/82937A	P,T
	RS232C I/O(Serial)	HP-85A,w/82939A	
	HP-IL I/O	HP-41C	

Note: HP9826/36A may be recommended for auto-performance tests w/HB-IB high speed test programs.

Supplemental Test Equipment

The following test equipment is used to perform supplemental tests which are in addition to or are alternate methods of checking the 4945A specifications.

- **Luminance Meter (Example: TV-Mate Photometer, Model PR-505D)**

Instrument	Specifications	Model	Use
Signal Analyzer	Freq. Resolution to 1 Hz 5Hz to 25MHz Band Analysis, 0.1dB Flat for 4 tone IMD.	HP3582A	T,P,A

References: A = Adjustment
P = Performance
T = Troubleshooting

1-11. SERVICE KIT

The 04945-62607 Service Kit contains the special service assemblies and tools needed to properly service the 4945A. Here is a list of the kit contents.

Table 1-1. Service Kit Contents

HP Part No.	Description
04945-60023	50 pin extender board
04945-60024	120 pin extender board
04945-60062	Passive loading board
04945-61617	A13 to A19 extender cable
04945-62608	Power supply test fixture
04945-62615	Test Amplifier
04945-62614	440 kHz Band Pass Filter
04945-62613	368 ohm balanced network
1251-3890	Ground Connector Terminal

Details of the Passive Loading Board and the Power Supply Test Fixture are given at the end of Section 8.

1-12. CLEANING AND HANDLING PRECAUTIONS

When cleaning the instrument or handling and repairing PC boards, the following precautions should be observed.

Cabinet Cleaning

To clean the instrument cabinet, use only a damp cloth and a mild detergent. Do not allow water to penetrate inside the cabinet.

When cleaning the plastic CRT window, use only a non-abrasive cleaner and a soft cloth.

Clean the fan filter every three months or more often depending on your environment. Clean the fan filter in warm, soapy water and allow it to dry before reinstalling.

PC Board Cleaning

When repairing PC boards, only RMA type solder should be used. This type is low in chlorides which are the main cause of most contamination problems.

It is recommended that the solder flux and resin be left on the board after a repair. This residue does not cause any electrical problems. Flux remover makes the board look good but leaves a film that can cause intermittents.

Do not use a pencil eraser to clean PC board edge connectors. Erasers all leave a film which causes intermittent problems.

The correct procedure is to clean the connectors with a 50/50 solution of water and isopropyl alcohol using a lint-free cloth (HP P/N 9310-0039). Do not use abrasive paper wipes.

The water/alcohol solution disolves the chemicals that get on the connectors from the soldering process. The lint-free cloth provides the mechanical rubbing action needed to free the contact fingers of all contamination.

PC Board Handling

All of the 4945A PC boards should be protected from contaminants such as oils and greases, fingerprints, body perspiration (sodium-chloride residue) and cleaning solutions with ionic detergents.

All of the 4945A PC boards have a Dry Film, High Impedance surface.

When handling a PC board, touch only the board edges and the board extractors, or wear clean cotton gloves.

If fingerprints and/or other contamination are suspected of causing operational problems, use the following cleaning procedure.

1. Wash both sides of the PC board with hot water and a stiff bristle brush. Clean between the traces on both sides of the board.

2. Place the cleaned boards in a drying oven at approximately 140 degrees F for 30 minutes.

   Handle the boards by the edges to avoid re-contamination.

SECTION II
INSTALLATION

2-1. INTRODUCTION

This section provides installation instructions for the 4945A. Also included in this section is information pertinent to initial inspection, preparation for use, storage, and shipment.

2-2. INITIAL INSPECTION

WARNING

TO AVOID HAZARDDOUS ELECTRICAL SHOCK, DO NOT CONDUCT PERFORMANCE WHEN THERE ARE SIGNS IF SHIPPING DAMAGE TO ANY PORTION OF THE OUTER COVERS AND PANELS.

Inspect the shipping container for damage. If the shipping container or cushioning material is damaged, it should be kept until the contents of the shipment have been checked mechanically and electrically. The electrical performance is checked automatically at the time of power on. If there are any selfcheck failures refer to Section IV for a description of the power-on self checks. If there is mechanical damage or defect, or if the instrument does not pass the electrical performance test, notify the nearest HewlettPackard Sales and Service office. If the shipping container or the cushioning materials show signs of damage, notify the carrier as well as the Hewlett-Packard office. Keep the shipping material for the carrier's inspection.

2-3. POWER REQUIREMENTS

The 4945A requires a power source of 115 or 230 Vac +11%/-22%, 48-63 Hz, single phase.

WARNING

THIS IS A SAFETY CLASS I PRODUCT (PROVIDED WITH A PROTECTIVE EARTH TERMINAL). AN UNINTERRUPTIBLE SAFETY EARTH GROUND MUST BE PROVIDED FROM THE MAIN POWER SOURCE TO THE PRODUCT IN PUT WIRING TERMINALS, POWER CORD, OR SUPPLIED CABLE SET. WHENEVER IT IS LIKELY THAT THE PROTECTION HAS BEEN IMPAIRED, THE INSTRUMENT MUST BE MADE INOPERATIVE AND BE SECURED AGAINST ANY UNINTENDED OPERATION. IF THIS INSTRUMENT IS TO BE ENERGIZED VIA AN AUTO TRANSFORMER OR VOLTAGE REDUCTION, MAKE SURE THE COMMON TERMINAL IS CONNECTED TO THE EARTHED POLE OF THE POWER SOURCE.

CAUTION

BEFORE CONNECTING THIS INSTRUMENT TO THE LINE VOLTAGE, BE SURE THAT THE LINE VOLTAGE SWITCH IS SET CORRECTLY AND THAT THE PROPER FUSE IS INSTALLED.

DAMAGE TO THE INSTRUMENT WILL OCCUR IF THE LINE VOLTAGE SELECTOR SWITCH IS SET TO 115 VOLTS WHEN 230 VOLTS IS APPLIED TO THE INSTRUMENT.

IF THE LINE FUSE BURNS OUT, DO NOT REPLACE IT UNTIL THE FAULT HAS BEEN DETERMINE AND REPAIRED BY ONLY A QUALIFIED SERVICE PERSON.

The 4945A is normally set at the factory for 115-volt operation. To operate the instrument from a 230-volt ac power source, proceed as follows:

1. Disconnect input power cable from instrument.
2. Select and install proper line fuse (see Table 2-1).
3. Slide the selector switch to the 230 volt position (See Figure 2-1).
4. Reconnect power cable.

Table 2-1. Line Fuse Part Numbers

Line Voltage	Fuse Rating	HP part Number
115 volts ac	T 3 A (250V)	2110-0381
230 volts ac	T 1.5 A (250V)	2110-0304

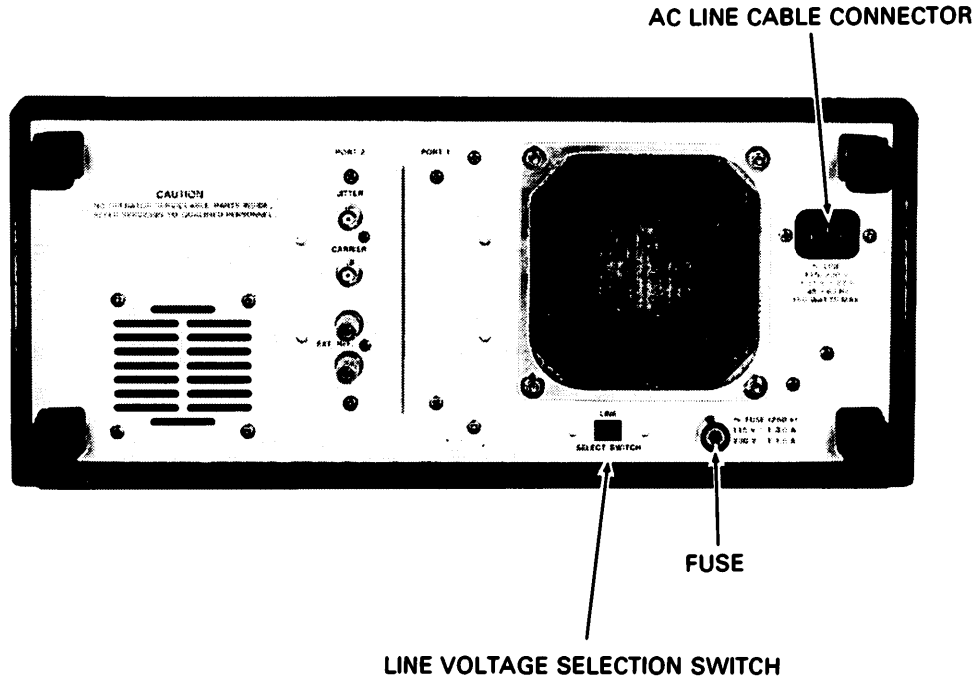

Figure 2-1. Line Voltage Selector Switch

WARNING

BEFORE CONNECTING THIS INSTRUMENT TO THE LINE VOLTAGE, THE PROTECTIVE EARTH TERMINAL OF THE INSTRUMENT MUST BE CONNECTED TO THE PROTECTIVE CONDUCTOR OF THE MAIN POWER CABLE. THE MAIN PLUG MUST BE INSERTED IN A SOCKET OUTLET PROVIDED WITH A PROTECTIVE EARTH CONTACT. THE PROTECTIVE ACTION MUST NOT BE NEGATED BY THE USE OF AN EXTENSION CORD WITHOUT A PROTECTIVE CONDUCTOR (GROUNDING). GROUNDING ONE CONDUCTOR OF A TWO-CONDUCTOR OUTLET DOES NOT PROVIDE AN INSTRUMENT GROUND.

2-4. POWER CABLE

The instrument power cable has three wires. When connected to an appropriate power receptacle this cable grounds the instrument cabinet. The type of power cable shipped with each instrument depends on the country of destination (see Table 2-1).

If the appropriate power cable is not included with the instrument, notify the nearest Hewlett-Packard sales and service office for a replacement.

Table 2-2. Power Cable Part Numbers

Plug Type	Cable HP Part Number	C D	Plug Description	Cable Length (inches)	Cable Color	For Use In Country
250V 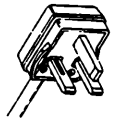	8120-1351 8120-1703	0 6	Straight*BS1363A 90°	90 90	Mint Gray Mint Gray	United Kingdom, Cyprus, Nigeria, Rhodesia, Singapore
250V 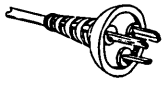	8120-1369 8120-0696	0 4	Straight*NZSS198/ASC112 90°	79 87	Gray Gray	Australia, New Zealand
250V	8120-1689 8120-1692	7 2	Straight*CEE7-Y11 90°	79 79	Mint Gray Mint Gray	East and West Europe, Saudi Arabia, Egypt, So. Africa, India (unpolarized in many nations)
125V 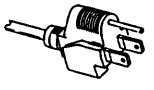	8120-1348 8120-1398 8120-1754 8120-1378 8120-1521 8120-1676	5 5 7 1 6 2	Straight*NEMA5-15P 90° Straight*NEMA5-15P Straight*NEMA5-15P 90° Straight*NEMA5-15P	80 80 36 80 80 36	Black Black Black Jade Gray Jade Gray Jade Gray	United States, Canada, Japan (100V or 200V), Mexico, Philippines, Taiwan
250V 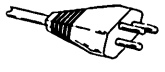	8120-2104	3	Straight*SEV1011 1959-24507 Type 12	79	Gray	Switzerland
250V 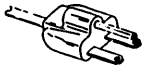	8120-0698	6	Straight*NEMA6-15P			United States, Canada
220V 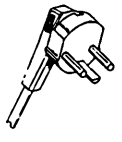	8120-1957 8120-2956	2 3	Straight*DHCK 107 90°	79 79	Gray Gray	Denmark
250V 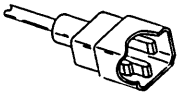	8120-1860	6	Straight*CEE22-VI (Systems Cabinet use)			

*Part number shown for plug is industry identifier for plug only Number shown for cable is HP Part Number for complete cable including plug.

2-5. OPERATING ENVIRONMENT

CAUTION

DO NOT BLOCK THE FAN OR VENTILATION HOLES. CLEARANCE SHOULD BE PROVIDED AROUND THE SIDES OF THE INSTRUMENT. AVOID ENVIRONMENT EXTREMES THAT MIGHT CAUSE CONDENSATION WITHIN THE INSTRUMENT.

The operating environment should be within the following limits:

Temperature..... 0 to 55 degrees C (32 to 131 degrees F)

2-6. PACKAGING

Original Packaging

Containers and materials identical to those used in factory packaging are available through Hewlett-Packard offices. If the instrument is being returned to Hewlett Packard for service, attach a tag indicating the type of service required, return address, model number, and full serial number. Mark the container FRAGILE to ensure careful handling. In correspondence, refer to the instrument by model number and full serial number.

Other Packaging

The following general instructions should be used for repackaging with commercially available materials:

A. Wrap the instrument in heavy paper or plastic.

B. Use a strong shipping container. A double-walled carton made of 350-pound test material is suitable.

C. Use a layer of shock-absorbing material 70 to 100 mm (3 to 4 inches) thick around all sides of the instrument to provide firm cushioning and to prevent movement inside the container.

D. Seal shipping container securely.

E. Mark shipping container FRAGILE to ensure careful handling.

F. In any correspondence, refer to the instrument by model number and full serial number.

SECTION III
OPERATION

Complete operation information for 4945A is described in the 4945A Operating Manual and is not duplicated in this Service Manual.

SECTION IV
PERFORMANCE TESTS

4-1. INTRODUCTION

This section describes the power-on self checks that are built into the 4945A and the performance verification tests which are used to verify the 4945A specifications.

Other tests (the diagnostic test modes) are described in Section 8.

4-2. POWER-ON SELF CHECK

At power-on, the 4945A executes a series of self tests on the digital and analog circuits. Error codes are displayed in the event of a hardware failure. The instrument also beeps and lights the front panel LEDs to indicate the passage of some digital tests and to serve as an indication in case the display hardware is not functional.

The power-on self check first tests the System Processor. If this test passes, the 4945A beeps once and the LED next to the VOLUME key lights.

The System Memory is then checked. If this test passes, the 4945A beeps twice and the LED next to the LEVEL key lights.

The Display Control circuits are tested. If this test passes, the 4945A beeps three times and the LED next to the FREQUENCY key lights.

The Receiver Processor is tested, and once it passes, it performs basic communications and measurement tests on the receiver circuits.

Upon completing these tests, the receiver processor and the system processor perform other tests to ensure that the communications between the two microprocessor systems is entirely functional.

The system processor then checks the "last setup" information stored in memory. If the last setup was not stored, "LAST SET-UP NOT RETAINED" is displayed and the system uses default setup values that are stored in ROM.

If an error occurs in the power-on self checks, an error number is displayed. Refer to "Power-On Self Check Troubleshooting" in Section 8 for detailed description of the power-on self check and definitions of the error numbers.

4-3. RECOMMENDED TEST EQUIPMENT AND ACCESSORIES

The test equipment used in the performance tests is included in the Recommended Test Equipment list (Paragraph 1-10) in Section 1.

In addition to the test equipment, the following accessories are used in the performance tests.

Cables

Two-conductor (twisted-pair) shielded cables must be used for their low noise, low capacitance and low crosstalk characteristics.

Cables should be 36 inches or less in length and have a capacitance in the 10 pf/ft range.

A good example of the recommended cables are the Model 1167 series cables from the Pomona Electronics Co.

Connector Adapters

The following connector adapters are used.

WE #310 (PJ -051) to Binding Post adapter
Example: Pomona Electric, Model 2112

Binding Post to Male BNC adapter
Example: Pomona Electric, Model 1296

Resistive Loads

The following load resistors are used.

Series impedance matching resistors

Value	HP Part Number
85 ohm, 1%	0698-8242
550 ohm, 1%	0811-2790
850 ohm, 1%	0811-1730
1150 ohm, 1%	0698-4469

Load resistors

Value	HP Part Number
135 ohm, 0.1%	0698-7364
368 ohm balanced	network (part of service kit)
600 ohm, 0.1%	0698-7408
900 ohm, 0.1%	0698-6344
1200 ohm, 0.1%	0699-1004 (or two, 600 ohm)
1700 ohm, 2%, 3W	0766-0006

4-4. TRANSMITTER LEVEL AND FREQUENCY TEST

Test Equipment Required

HP 3455A Digital Voltmeter
HP 5315A or HP 5316A Counter
HP 04945-62615 Test Amplifier (part of service kit)
600 ohm load
550 ohm resistor
Low Capacitance/Low Crosstalk Cables

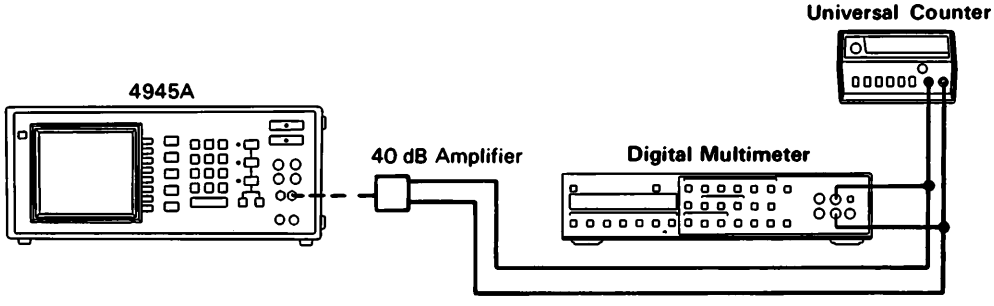

Setup Conditions

Connect the test equipment as shown above.

4945A:	Test Mode - Level/Frequency Transmit Impedance - 600 ohm
04945-62615:	variable, see table
3455A:	Function - AC volts Range - 1 volt (for best accuracy) 10 volt (for +13 dB measurement)
5315A/5316A:	Sample rate - maximum Below 10 kHz use 10 kHz low pass filter Adjust sensitivity for steady reading

Procedure

1. Check the 4945A output frequency accuracy at the five frequencies listed below. The accuracy at each frequency should be +-.01 %. Be sure to set the Test Amplifier to 0 dB.

Frequency Setting	Actual Reading
20 Hz	
200 Hz	
1004 Hz	
15 kHz	
110 kHz	

2. Check the 4945A output level flatness at the four levels listed in the table below. Check the four levels at each one of the five frequencies listed. Record your readings in the table below. The level specification for each frequency is given below each column of the table.

Transmitter Output Level Table

Note: The amplifier settings are used to make use of the 1 volt range of the 3455A, which is the most accurate.

		Frequency				
4945A Level	HP----A (Level)	20 Hz	200 Hz	1004 Hz	15 kHz	110 kHz
+13 dB	0 dB (346 mV)					
0 dB	0 dB (775 mV)					
-20 dB	+20 dB (775 mV)					
-40 dB	+40 dB (775 mV)					
	Spec.*	+-.5dB	+-.5dB	+-.2dB	+-.5dB	+-1dB

* Here are the specification values converted into volts.

+13 dB	+-.5 dB	=	3.266 to 3.665 volts
	+-.2 dB	=	3.381 to 3.541 volts
	+- 1 dB	=	3.084 to 3.882 volts
0 dB	+-.5 dB	=	.731 to .820 volts
	+-.2 dB	=	.757 to .792 volts
	+- 1 dB	=	.690 to .869 volts
-20 dB	+-.5 dB	=	.082 to .073 volts
	+-.2 dB	=	.079 to .075 volts
	+- 1 dB	=	.087 to .069 volts

-40 dB	+-.5 dB	=	.0081 to .0073 volts
	+-.2 dB	=	.0079 to .0076 volts
	+- 1 dB	=	.0087 to .0069 volts

3. Accuracy at 1004 Hz is +-0.1 dB for -20 to 0 dBm levels, and +- 0.2 for -60 to +10 dBm levels. This can be checked at the same time as the other measurements.

Measurements Below -40 dB:

Test Equipment Required

HP 3336B, Opt 005, Synthesizer
HP 3585A Spectrum Analyzer
HP 04945-62615 Test Amplifier
550 ohm resistor

Setup and Procedure

1. Connect the test amplifier to the 600 ohm output of the 3336B and then to the 3585A via a series 550 ohm resistor. Set the amplifier gain to +40 dB.

   3336B Opt 005: Frequency - 1000 Hz
   Level - -50 dBm or -60 dBm

   3585A: Center Frequency - 1000 Hz
   Sweep - Manual
   dB/Div. - 1.0 dB
   Input impedance - 50 ohms
   Counter - ON
   RBW - 10 Hz
   VBW - 3 Hz
   Auto Range - ON
   REF LVL Track - ON, then cycle OFF and back ON

2. With the 3336B at either - 50 dB or -60 dB, set up the 3585A for a reference level of either - 10 dBv or -20 dBv. Press MKR->CF, and set 0.00 dB offset. Readings should be - 10 dBv +- -0.1 or -20 dBv +- -0.1.

3. Move the test amplifier to the 4945A transmitter output.

   4945A: Test Mode - Level Frequency
   Frequency - 1000 Hz (600 ohm)
   Level - -50 dBm or -60 dBm

   Check the output accuracy on the 3585A for -50 dBv +- -0/2 or -60 dBv +- - 0.2.

4-5. TRANSMITTER LEVEL DISTORTION TEST

Test Equipment Required

HP 8903A Audio Analyzer

HP 04945-62615 Test Amplifier

Low Capacitance/Low Crosstalk Cables

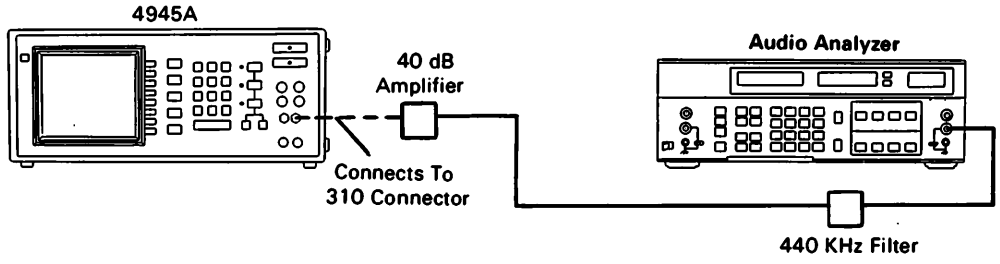

Setup Conditions

Connect the test equipment as shown above.

4945A:	Test Mode - Level/Frequency Transmit Impedance - 1200 ohm
8903A:	Measurement - Distortion Log/lin - log Input - Floating, high input with 600 ohm load Use 30 kHz LPF below 3 kHz Use 80 kHz LPF above 3 kHz
04945-62615:	Use only on measurements below -10 dB

Procedure

1. Refer to the table below and check each frequency at the four levels. For amplitudes below -10 dB, use the test amplifier to get the signal to a measureable level (approximately 20 dB gain).

   The noise level should be >=50 dB below the signal level for 100 Hz, 1004 Hz and 3 kHz. Be sure to use the 30 kHz LPF.

   The noise level should be >=40 dB below the signal level for 4 kHz, 10 kHz and 20 kHz. Be sure to use the 80 kHz LPF.

2. Record your readings in the table below.

Transmitter Level Distortion Table

	Level				
Frequency	-40 dB	-20 dB	0 dB	+10 dB	
100 Hz					>=50 dB
1004 Hz					
3 kHz					
4 kHz					>=40 dB
10 kHz					
20 kHz					

4-6. TRANSMITTER HOLD COIL CURRENT TEST

Test Equipment Required

HP 3478A Digital Multimeter

HP 6827A (Opt. 009) or HP 6209B Power Supply (floating) to supply +-42.5 V and +-105 V.

1700 ohm resistor

Low Capacitance/Low Crosstalk Cables

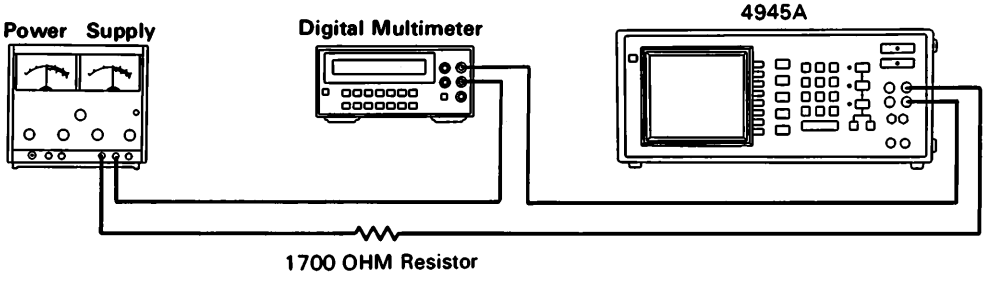

Setup Conditions

Connect the test equipment as shown above. Connect the cable to the transmitter input jacks

4945A: Transmitter - quiet termination or -75 dB level
Transmit Hold Coil - ON

3478A: Measure - dc current

Power Supply: Initially set to +42.5 volts

Procedure

1. Set the power supply to the voltages listed below. Record the current at each voltage. The current should be >20 mA for all voltage settings.

DC Voltage	Hold Current
+42.5 V	
-42.5 V	
+105 V	
-105 V	

2. Make these checks for each of the transmitter termination impedances (135, 600, 900 and 1200 ohms).

4-7. RECEIVER HOLD COIL CURRENT TEST

Test Equipment Required

HP 3468A Digital Voltmeter

HP 6209B Power Supply (floating) to supply +-42.5V and +-105V

1700 ohm resistor

Low Capacitance Cables

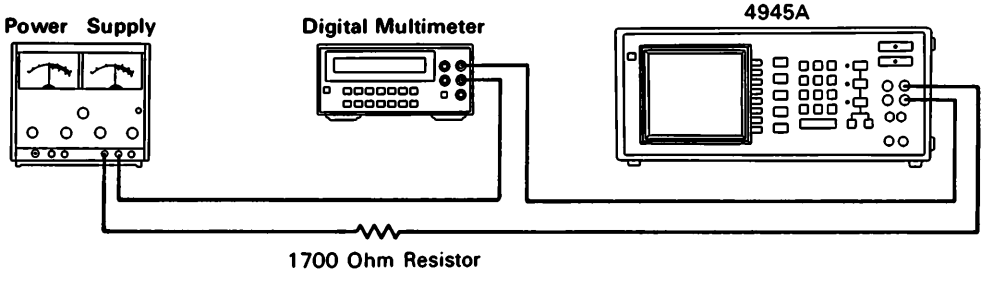

Setup Conditions

Connect the test equipment as shown above. Connect the cable to the receiver input jacks.

4945A: Receiver - level/frequency
Receive Hold Coil - ON

3468A: Measure - dc current

Power Supply: Initially set to +42.5 volts

Procedure

1. Set the power supply to the voltages listed below. Record the current at each voltage. The current should be >20 mA for all voltage settings.

DC Voltage	Hold Current
+42.5 V	
-42.5 V	
+105 V	
-105 V	

2. Make these checks for each of the transmitter termination impedances (135, 600, 900 and 1200 ohms).

4-8. RECEIVER LEVEL AND FREQUENCY TEST

Test Equipment Required

HP 3325A Synthesizer
HP 3455A Digital Voltmeter
HP 4436A Attenuator
550 ohm resistor
Low Capacitance/Low Crosstalk Cables

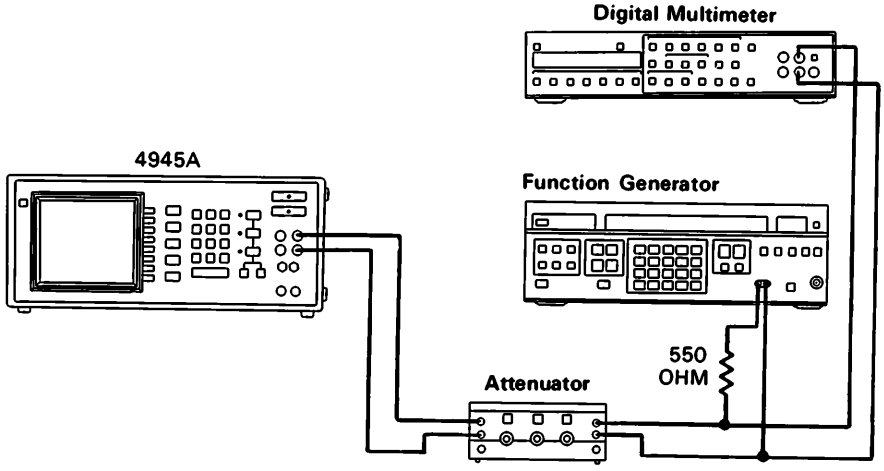

Setup Conditions

Connect the test equipment as shown above.

4945A:	Test Mode - Level/Frequency Termination Impedance - 600 ohm
3325A:	Set level and frequency according to table below
3455A:	AC volts, Range - Auto

Procedure

1. Perform the 4945A calibration by selecting CALIBRATE in the SELF TEST menu, then go back to Level/Frequency.

2. To check the receiver frequency accuracy, set the 3325A to each of the frequencies listed below. Read the 4945A receiver frequency on the display. The 4945A frequency accuracy should be +- 1 Hz from 20 Hz to 9999 Hz and +- 10 Hz from 10 kHz to 110 kHz.

Frequency Setting	Actual Reading
20 Hz	
200 Hz	
1004 Hz	
15 kHz	
110 kHz	

3. To check the 4945A receiver level accuracy, set the 3325A to the frequencies listed in the table below. For each frequency, set the 3325A level to each of the five levels (listed in the table).

   Note: Set the attenuator to 0 dB for the +13 dB, 0 dB and -20 dB levels. Use the attenuator for the -50 dB and -60 dB levels.

4. Record your readings in the table below. The level specification for each frequency is given in the boxes of the following table.

Receiver Level Table

3325A Level	3325A Frequency 20 Hz	200 Hz	1004 Hz	15 kHz	110 kHz
+ 13 dB (3.46 V)	+-.5dB	+-.2dB	+-.2dB	+-.5dB	+-.5dB
0 dB (.775 V)	+-.5dB	+-.2dB	+-.1dB	+-.5dB	+-.5dB
-20 dB (775 mV)	+-.5dB	+-.2dB	+-.1dB	+-.5dB	+-.5dB
-50 dB (2.45 mV)	+-.5dB	+-.2dB	+-.2dB	+-.5dB	+-.5dB
-60 dB (.775 mV)	+-1dB	+-.5dB	+-.5dB	+-1dB	+-1dB

4-9. FILTER TESTS

Test Equipment Required

3325A Synthesizer
550 ohm resistor
Low Capacitance/Low Crosstalk Cables

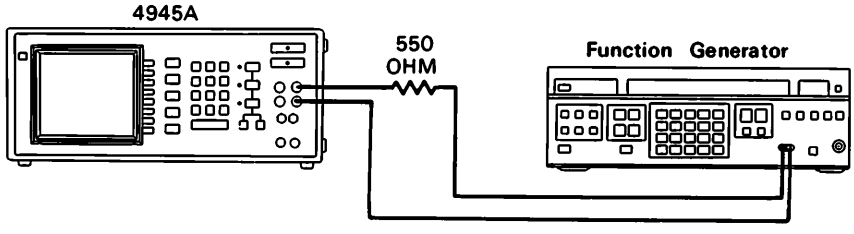

Equipment Setup

Connect the test equipment as shown above. The equipment setup is good for all the filter tests.

The filter tests make use of the 4945A Diagnostic Mode 46. A different segment is used for each filter.

4-10. 50 kilobit Filter Response Test

Setup Conditions

Connect the test equipment as shown at the beginning of "Filter Tests".

4945A: Self Check Mode 46, Segment 4

3325A: Frequency to 1000 Hz

Procedure

1. Run Mode 46, Segment 4.
   Line 1 of the display reads X.XXXX volts with zero blanking
   Line 2 of the display reads XX.XXX dB with zero blanking.

2. Adjust the 3325A output level for a 0.00 dB reading (as close as possible) on line 2 of the display at 1000 Hz. This sets the reference for other measurements.

   Note: Due to impedance matching, the actual level on the 3325A will be approximately +10.8 dB.

3. Set the 3325A to the frequencies listed below and record the levels displayed on line 2. The levels (filter response) should correspond to the expected levels given next to the frequencies.

Frequency	Expected Level in dB	Actual Level in dB
20 Hz	-10 +-3.0	
50 Hz	-2.7 +-1.5	
200 Hz	-0.2 +-0.5	
1000 Hz	0.0 +-0.2	
5000 Hz	-0.1 +-0.5	
10 kHz	-0.3 +-0.5	
15 kHz	-0.7 +-1.0	
20 kHz	-1.3 +-1.0	
25 kHz	-2.1 +-1.0	
30 kHz	-3.3 +-1.5	
35 kHz	-5.0 +-1.7	
40 kHz	-7.8 +-2.0	
45 kHz	-14.0 +-3.0	

4-11. 15 kHz FILTER RESPONSE TEST

Setup Conditions

Connect the test equipment as shown at the beginning of "Filter Tests".

4945A: Self Check Mode 46, Segment 5

3325A: Frequency to 1000 Hz

Procedure

1. Run Mode 46, Segment 5.
   Line 1 of the display reads X.XXXX volts with zero blanking
   Line 2 of the display reads XX.XXX dB with zero blanking.

2. Adjust the 3325A output level for a 0.00 dB reading (as close as possible) on line 2 of the display at 1000 Hz. This sets the reference for other measurements.

   Note: Due to impedance matching, the actual level on the 3325A will be approximately +10.8 dB.

3. Set the 3325A to the frequencies listed below and record the levels displayed on line 2. The levels (filter response) should correspond to the expected levels given next to the frequencies.

Frequency	Expected Level in dB	Actual Level in dB
30 Hz	0.0 +-2.5	
60 Hz	0.0 +-1.7	
400 Hz	0.0 +-0.5	
1000 Hz	0.0 +-0.2	
10 kHz	-0.8 +-1.0	
15 kHz	-3.0 +-1.8	
30 kHz	-12.3 +-3.0	
100 kHz	-33.0 +-___	

4-12. 3 kHz FILTER RESPONSE TEST

Setup Conditions

Connect the test equipment as shown at the beginning of "Filter Tests".

4945A: Self Check Mode 46, Segment 6

3325A: Frequency to 1000 Hz

Procedure

1. Run Mode 46, Segment 6.
   Line 1 of the display reads X.XXXX volts with zero blanking
   Line 2 of the display reads XX.XXX dB with zero blanking.

2. Adjust the 3325A output level for a 0.00 dB reading (as close as possible) on line 2 of the display at 1000 Hz. This sets the reference for other measurements.

   Note: Due to impedance matching, the actual level on the 3325A will be approximately +10.8 dB.

3. Set the 3325A to the frequencies listed below and record the levels displayed on line 2. The levels (filter response) should correspond to the expected levels given next to the frequencies.

Frequency	Expected Level in dB	Actual Level in dB
30 Hz	0.0 +-2.5	
60 Hz	0.0 +-1.7	
400 Hz	0.0 +-0.5	
1000 Hz	0.0 +-0.2	
2000 Hz	-0.8 +-1.0	
3000 Hz	-3.0 +-1.8	
6000 Hz	-12.3 +-3.0	
100 kHz	> -60	

4-13. Hz NOTCH AND 15 kHz FILTER RESPONSE TEST

Setup Conditions

Connect the test equipment as shown at the beginning of "Filter Tests".

4945A: Self Check Mode 46, Segment 3

3325A: Frequency to 3000 Hz

Procedure

1. Run Mode 46, Segment 3.
   Line 1 of the display reads X.XXXX volts with zero blanking
   Line 2 of the display reads XX.XXX dB with zero blanking.

2. Adjust the 3325A output level for a 0.00 dB reading (as close as possible) on line 2 of the display at 3000 Hz. This sets the reference for other measurements.

   Note: due to impedance matching, the actual level on the 3325A will be approximately +10.8 dB.

3. Set the 3325A to the frequencies listed below and record the levels displayed on line 2. The levels (filter response) should correspond to the expected levels given next to the frequencies.

Frequency	Expected Level in dB	Actual Level in dB
3000 Hz	0.0 +-0.2	
400 Hz	0.0 +-0.5	
862 Hz	>= -3.0	
995 Hz	<= -60	
1010 Hz	<= -60	
1025 Hz	<= -60	
1182 Hz	>= -3.0	
1700 Hz	0.0 +-0.5	

4-14. Program Filter Response Test

Setup Conditions

Connect the test equipment as shown at the beginning of "Filter Tests".

4945A: Self Check Mode 46, Segment 7

3325A: Frequency to 1000 Hz

Procedure

1. Run Mode 46, Segment 7.
   Line 1 of the display reads X.XXXX volts with zero blanking
   Line 2 of the display reads XX.XXX dB with zero blanking.

2. Adjust the 3325A output level for a 0.00 dB reading (as close as possible) on line 2 of the display at 1000 Hz. This sets the reference for other measurements.

   Note: Due to impedance matching, the actual level on the 3325A will be approximately +10.8 dB.

3. Set the 3325A to the frequencies listed below and record the levels displayed on line 2. The levels (filter response) should correspond to the expected levels given next to the frequencies.

Frequency	Expected Level in dB	Actual Level in dB
100 Hz	-26.3 +-2.0	
200 Hz	-17.3 +-2.0	
300 Hz	-12.2 +-2.0	
400 Hz	-9.0 +-2.0	
500 Hz	-6.6 +-1.0	
600 Hz	-4.7 +-1.0	
700 Hz	-3.2 +-1.0	
800 Hz	-2.0 +-1.0	
900 Hz	-0.8 +-1.0	
1000 Hz	0.0 +-0.2	
1500 Hz	+3.2 +-1.0	
2000 Hz	+4.8 +-1.0	
2500 Hz	+5.6 +-2.0	
3000 Hz	+6.0 +-2.0	
4000 Hz	+6.5 +-2.0	
5000 Hz	+6.5 +-2.0	
6000 Hz	+6.4 +-3.0	
7000 Hz	+5.8 +-3.0	
8000 Hz	+4.0 +-3.0	
9000 Hz	+1.5 +-4.0	
10 kHz	-8.5 +-4.0	
80 kHz	<= -44	

4-15. C-Message Filter Response Test

Setup Conditions

Connect the test equipment as shown at the beginning of "Filter Tests".

4945A: Self Check Mode 46, Segment 8

3325A: Frequency to 1000 Hz

Procedure

1. Run Mode 46, Segment 8.
   Line 1 of the display reads X.XXXX volts with zero blanking
   Line 2 of the display reads XX.XXX dB with zero blanking.

2. Adjust the 3325A output level for a 0.00 dB reading (as close as possible) on line 2 of the display at 1000 Hz. This sets the reference for other measurements.

   Note: Due to impedance matching, the actual level on the 3325A will be approximately +10.8 dB.

3. Set the 3325A to the frequencies listed below and record the levels displayed on line 2. The levels (filter response) should correspond to the expected levels given next to the frequencies.

Frequency	Expected Level in dB	Actual Level in dB
60 Hz	-55.7 +-2.0	
100 Hz	-42.5 +-2.0	
200 Hz	-25.1 +-2.0	
300 Hz	-16.3 +-1.0	
400 Hz	-11.2 +-1.0	
500 Hz	-7.7 +-1.0	
600 Hz	-5.0 +-1.0	
700 Hz	-2.8 +-1.0	
800 Hz	-1.3 +-1.0	
900 Hz	-0.3 +-1.0	
1000 Hz	0.0 +-0.2	
1200 Hz	-0.4 +-1.0	
1300 Hz	-0.7 +-1.0	
1500 Hz	-1.2 +-1.0	
1800 Hz	-1.3 +-1.0	
2000 Hz	-1.1 +-1.0	
2500 Hz	-1.1 +-1.0	
2800 Hz	-2.0 +-1.0	
3000 Hz	-3.0 +-1.0	
3300 Hz	-5.1 +-2.0	
3500 Hz	-7.1 +-2.0	
4000 Hz	-14.6 +-3.0	
4500 Hz	-22.3 +-3.0	
5000 Hz	-28.7 +-3.0	
40 kHz	> -60	

4-16. RECEIVER PASSIVE RETURN LOSS TEST

Test Equipment Required

HP 3325A Synthesizer
HP 3455A Digital Voltmeter
550 ohm resistance
600 ohm resistor
Low Capacitance Cables

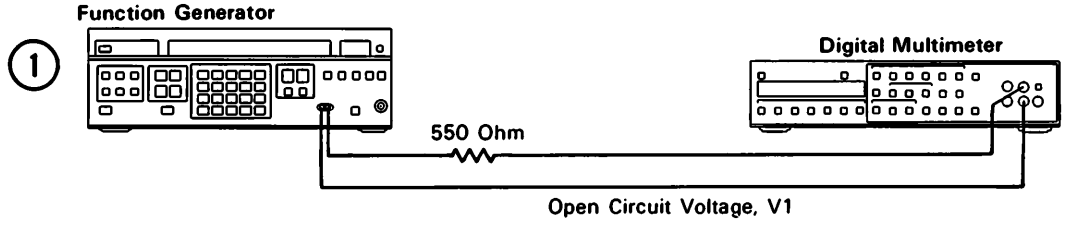

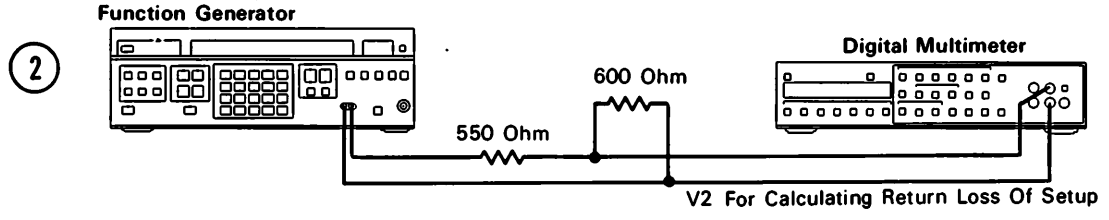

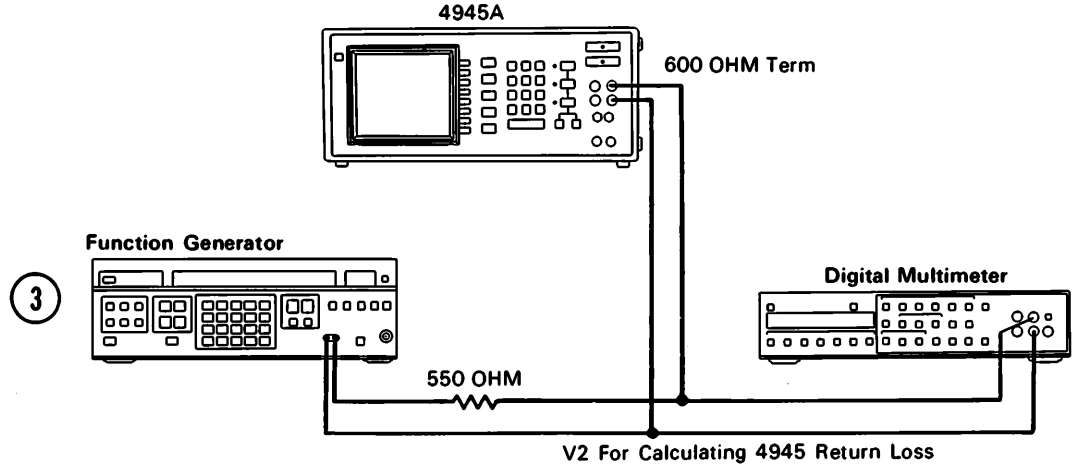

Setup Conditions

Connect the test equipment as shown above. Keep all cables as short as possible.

4945A:	Termination Impedance - 600 ohm Hold - OFF
3325A:	Frequency - 4000 Hz
3455A:	Function - AC Volts Range - Auto

Procedure

Return loss in dB may be found by using the following equation.

$$RL = -20\log\left|\frac{R2 - R1}{R2 + R1}\right| = -20\log\left|\frac{2V2 - V1}{V1}\right|$$

R1 is the source resistance and V1 is its open circuit voltage.
R2 is the load resistance and V2 is the voltage across the load.

1. Connect R1 and measure the open circuit voltage (V1). Set the 3325A output so that the V1 reading on the 3455A is 1.00 volt.

2. Connect R2 (Load R) and record the voltage across the load (V2).

3. Calculate the return loss of the test equipment, using the formula previously shown. The return loss must be greater than 40 dB in order to accurate enough to test the 4955A. If it is not, check R1, the 3325A and the interconnecting cables.

4. Remove the load resistor (R2) and connect the cable to the 4945A receiver input. Sweep the 3325A frequency from 200 Hz to 110 kHz. Record the highest and lowest voltage measured on the 3455A and the frequencies at which these voltages were measured.

5. Disconnect the 4945A and record the open circuit voltage at the points recorded in step 4.

6. Calculate the return loss for both cases. V1 is the open circuit voltage from step 5 and V2 is the voltage recorded in step 4. The return loss must be greater than 30 dB.

4-17. TRANSMITTER PASSIVE RETURN LOSS TEST

Test Equipment Required

HP 3455A Digital Voltmeter
600 ohm resistor
Low Capacitance Cables

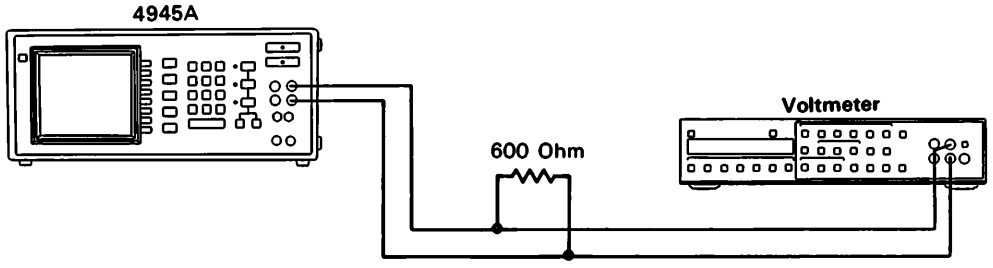

Setup Conditions

Connect the test equipment as shown above. Keep all cables as short as possible.

4945A:	Termination Impedance - 600 ohm
	Hold - OFF
	Frequency - 200 Hz
	Level - 0 dB
3455A:	Function - AC Volts
	Range - Auto

Procedure

Return loss in dB may be found by using the following equation.

$$RL = -20\log\left|\frac{2V2 - V1}{V1}\right|$$

V1 is the 4945A open circuit output voltage.
V2 is the voltage across the load resistor.

1. Connect the cable and the load resistor to the 4945A transmitter output. Slowly sweep the 4945A frequency from 200 Hz to 110 kHz. Record the highest and lowest voltages measured on the 3455A, along with the frequencies at which these voltages occurred. This voltage is V2.

2. Disconnect Load R and measure the open circuit voltage at both frequencies recorded in step 1. This voltage is V1.

3. Calculate the return loss for both cases, using the equation previosly shown. V2 is the voltage measured in step 1. V1 is the voltage measured in step 2. The return loss must be greater than 30 dB.

4-18. TRANSMITTER LONGITUDINAL BALANCE TEST

Test Equipment Required

3585A Spectrum Analyzer
368 ohm Balance Network
Low Capacitance/Low Crosstalk Cables

Note: You can also use a 3582A. In this case, you also need a 3455A Digital Voltmeter and a 1090 ohm load.

The voltmeter is only needed for the 110 kHz measurement.

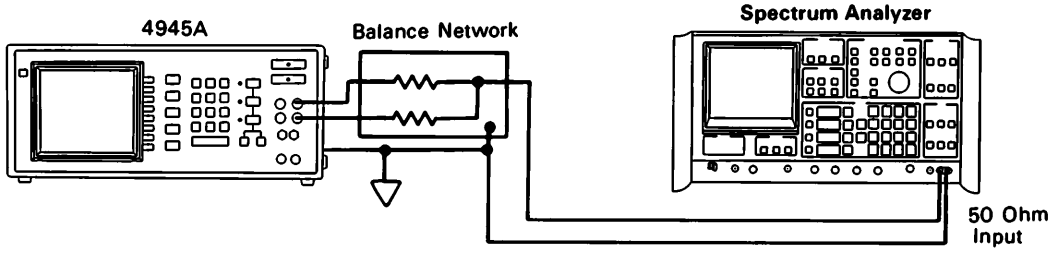

Using the 3585A

Setup Conditions

Connect the test equipment as shown above.

4945A: Test Mode - Level/Freqency set according to table below
Impedance - set according to table below

3585A: Mode - Set Center
Frequency span - 500 Hz
Trace - View A
Sweep - Continuous
Trigger - Freerun
Impedance - 50 ohm
Input - Auto range
Vertical - 10 dB/div

Alternate

3582A: Filter - Flattop
Input - A, Display - A
Sensitivity - 3 mV/div, -50 dBv
Mode - Set Center
Freq Span - 250 Hz

3455A: Measure - AC Range - Auto

Procedure

1. Select the appropriate table below.

2. Set the 4945A to any one of the impedances listed in the table below.

3. Set the 4945A level to the level listed beneath the selected impedance.

4. Set the 4945A frequency to the frequencies listed in the table. Measure the signal level with the 3585A or the 3582A. The signal levels should be below the specification listed next to the frequency. Record your readings in the table.

3585 Measurement Table

XMIT FREQ HZ	Balance Spec. (dB)	135 ohm Level= +4.5dB	600 ohm Level= +.7dB	900 ohm Level= +.7dB	1200 ohm Level= +.7dB
50	>-90dB				
130	>-90dB				
250	>-84dB				
1000	>-71.6dB				
5000	>-58dB				
110k	>-31dB				

3582A Measurement Table

When using the 3582A, the AC Voltmeter is only used for the 110 kHz measurements. Convert the AC voltage reading on the voltmeter to dB.

XMIT FREQ HZ	Balance Spec. (dB)	135 ohm Level= +4.5dB	600 ohm Level= +6.7dB	900 ohm Level= +6.7dB	1200 ohm Level= +6.9dB
50	>-90dB				
130	>-90dB				
250	>-84dB				
1000	>-71.6dB				
5000	>-58dB				
110k	>-31dB				

↑
Subtract +5 dB from measurement for 135 ohms

↑
Add +5 dB to measurement at 110 kHz, 1200 ohm

4-19. RECEIVER BALANCE

Test Equipment Required

HP 3325A Synthesizer
HP 3455A Digital Voltmeter
HP 6827A Amplifier
368 ohm Balance Network

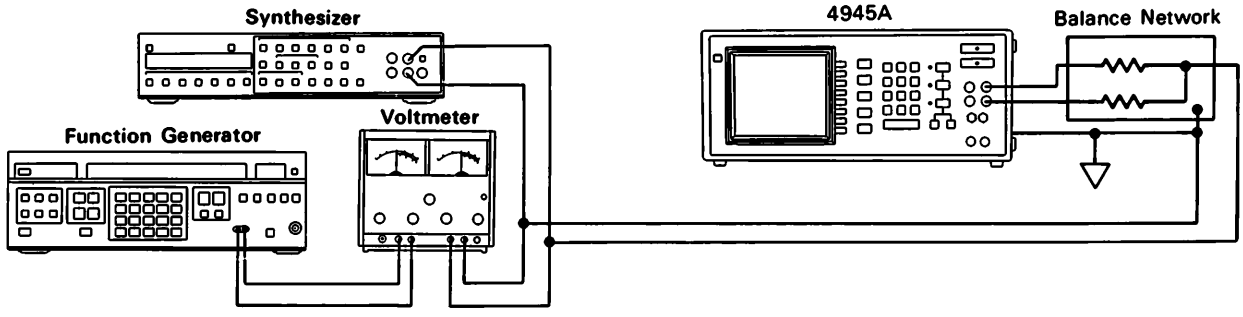

Setup Conditions

Connect the test equipment as shown above.

4945A:	Test Mode - Level Frequency set according to table below Impedance - Receiver - set according to table below Transmitter - quiet termination
3325A:	Frequency - set according to table below Level - set level to achieve 29.97 volts on the 3455A.
6827A:	Gain - set gain to X10.
3455A:	Function - AC volts Range - Auto

Procedure

1. Connect the balance network to the receiver terminals.

2. Set the 4945A receiver impedance to one of the impedances listed below.

3. Set the 3325A to each of the frequencies listed in the table below. Be sure the voltage on the 3455A is set to 29.97 volts.

4. The balance in dB should be greater than the specification listed in the Balance Specification table.

5. To calculate the balance reading, subtract the dB reading shown on the 4945A from the input dB reading which is given in the tables below for each impedance.

For example: 1200 Hz at 600 ohms, the input level is 31.8 dB. If the 4945A reading is -41 dB, Then the balance measurement is:

+31.8 dB - (-41 dB) = 72.8 dB

which is within the specification of > 70 dB.

Receiver Longitudinal Balance Specifications

Freqency	Specification
50 Hz	> 90 dB
120 Hz	> 90 dB
240 Hz	> 84 dB
1200 Hz	> 70 dB
5000 Hz	> 58 dB
110 kHz	> 31 dB

135 ohm Impedance

Freq.	Input Level		4945A Level		Balance dB
50 Hz	+38.2	-		=	
120 Hz	+38.2	-		=	
240 Hz	+38.2	-		=	
1200 Hz	+38.2	-		=	
5000 Hz	+38.2	-		=	
110 kHz	+8.7	-		=	

600 ohm Impedance

Freq.	Input Level		4945A Level		Balance dB
50 Hz	+31.8	-		=	
120 Hz	+31.8	-		=	
240 Hz	+31.8	-		=	
200 Hz	+31.8	-		=	
000 Hz	+31.8	-		=	
110 kHz	+2.2	-		=	

900 ohm Impedance

Freq.	Input Level		4945A Level		Balance dB
50 Hz	+30.0	-		=	
120 Hz	+30.0	-		=	
240 Hz	+30.0	-		=	
1200 Hz	+30.0	-		=	
5000 Hz	+30.0	-		=	
110 kHz	+0.46	-		=	

1200 ohm Impedance

Freq.	Input Level		4945A Level		Balance dB
50 Hz	+28.8	-		=	
120 Hz	+28.8	-		=	
240 Hz	+28.8	-		=	
1200 Hz	+28.8	-		=	
5000 Hz	+28.8	-		=	
110 kHz	-0.8	-		=	

4-20. NOISE TO GROUND TEST

Test Equipment Required

HP 3325A Synthesizer
HP 3455A Digital Voltmeter
HP 6827A Amplifier

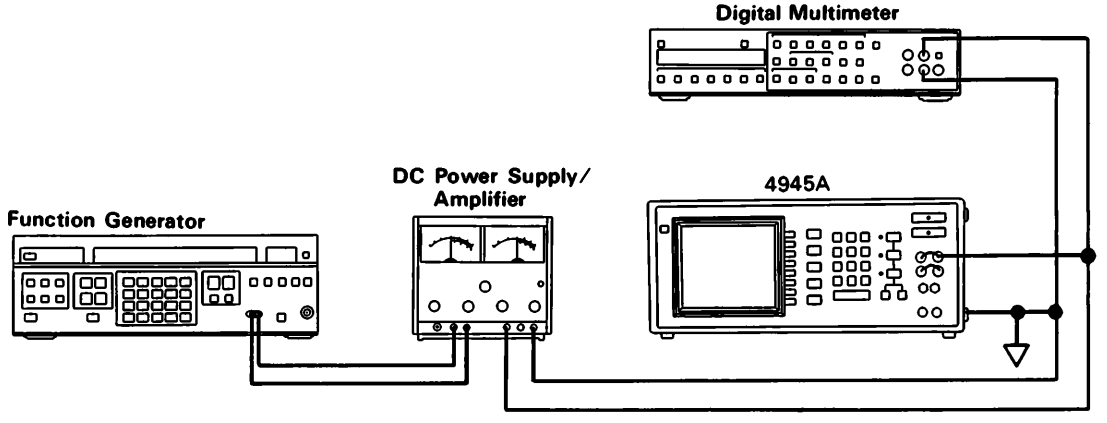

Setup Conditions

Connect the test equipment as shown above. Short the 4945A transmitter output to the receiver input.

4945A: Test Mode - Level/Frequency
Impedance - Receiver - 600 ohm
Transmitter - quiet termination

3325A: Frequency - 1000 Hz Level - set level to achieve level listed in the table below on the 3455A.

6827A: Gain - set gain achieve desired level.

3455A: Function - AC volts
Range - Auto

Procedure

1. Set the 3325A gain and the 6827A gain to achieve the three AC voltage levels (listed in the table) on the 3455A.

2. On the 4945A switch in one of the filters listed in the table. Check the noise readings at the three levels with each of the filters switched in individually.

3. The noise reading in dBrn is displayed on the 4945A. The noise specification is given in the table. Record your readings in the table.

Noise To Ground Table

3325A AC Level at 1 kHz	Spec dBrn +-1dB	Filter Selected				
		C-MSG	3 kHz	15 kHz	Program	50 kbit
+77.46 V (40dBm on 4945A)	130					
+775 mV (0dBm on 4945A)	90					
+2.45 mV (-50 dBm on 4945A)	40					

4-21. MESSAGE CIRCUIT NOISE (No Holding Tone)

Test Equipment Required

HP 3325A Synthesizer
HP 3336A Synthesizer
HP 4436 Attenuator (balanced 600 ohm load)
550 ohm resistor
Low Capacitance/Low Crosstalk Cables

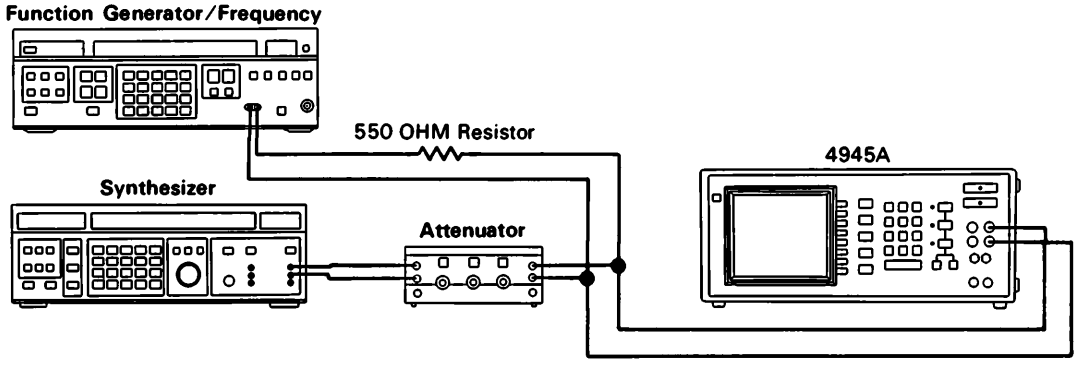

Setup Conditions

Connect the test equipment as shown above. Connect the signal cable to the 4945A receiver input.

4945A: Test Mode - Message Circuit Noise
Impedance - Transmitter, quiet termination
Receiver, 600 ohm

3325A: Frequency - 1 kHz
Level - +14.3 dB
Function - AC

3336A: Frequency - 200 Hz Level - -75 dB

4436: Attenuation - 0.0 dB

Procedure

1. Set the frequency and level of the 3325A and the 3336A as shown above.

2. On the 4945A, switch in the filters listed below.

- C-MSG
- 3 kHz
- 15 kHz
- Program
- 50 kbit

The 4945A display should indicate 90 dBrn +-1 for each filter.

4-22. NOISE WITH TONE (Notch Noise)

Test Equipment Required

3325A Synthesizer
3336A Synthesizer
4436A Attenuator
550 ohm resistor
Low capacitance/Low Crosstalk cables

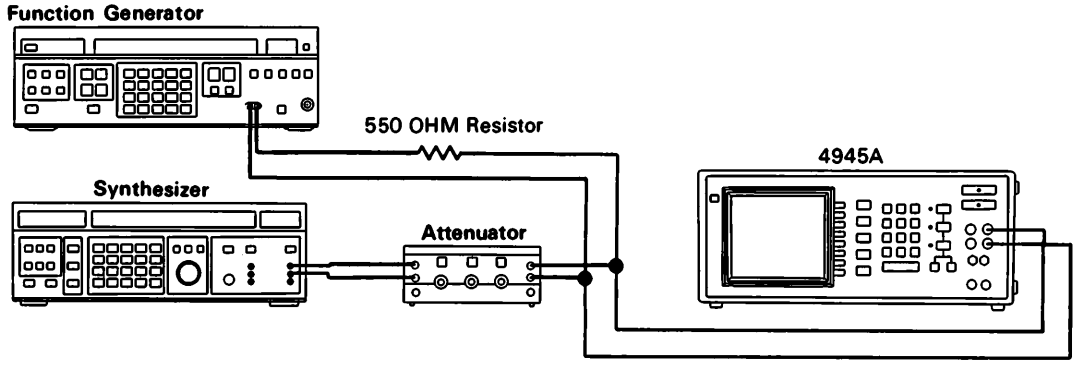

Setup Conditions

Connect the test equipment as shown above. Connect the signal cable to the 4945A receiver input.

4945A: Test Mode - Message Circuit Noise
Impedance - Transmitter, quiet termination
Receiver, 600 ohm

3325A: Set frequency and level according to table below. Function - AC

3336A: Set frequency and level according to table below.

4436: Set attenuation according to the table below.

Procedure

1. Refer to the table below. For each line, set up the 3336A, the 3325A and the 4436A as shown.

2. Select the 4945A filter shown on the particular line.

3. The noise reading in dBrn is displayed on the 4945A. The specification for each line is given in the table.

4. Record your readings for each line in the table.

3336A Freq/Amp	3325A Freq/Amp	4436A Atten	4945A Filter	Spec. dBrn	Your Reading
1kHz/+3.5dB	2kHz/+22.4dB	0 dB	C-MSG	90+-1	
2kHz/-41.4dB	1kHz/+14.3dB	0 dB	C-MSG	44+-1	
2kHz/-64.4dB	1kHz/-24.7dB	0 dB	C-MSG	21+-1	
400Hz/+3.5dB	1kHz/+14.3dB	0 dB	3-kHz	90+-1	
400Hz/-42.5dB	1kHz/-24.7dB	0 dB	3-kHz	44+-1	
400Hz/+3.5dB	1kHz/+14.3dB	0 dB	15-kHz	90+-1	
400Hz/-47.5dB	1kHz/-24.7dB	0 dB	15-kHz	44+-1	
2kHz/-1.3dB	1kHz/+14.3dB	0 dB	Program	90+-1	
2kHz/-47.3dB	1kHz/-24.7dB	0 dB	Program	44+-1	
5kHz/=3.6dB	1kHz/+14.3dB	0 dB	50 kbit	90+-1	
5kHz/-42.4dB	1kHz/-24.7dB	0 dB	50 kbit	44+-1	
2kHz/+1.63dB	1kHz/+22.3dB	0 dB	C-MSG	11+-1	
2kHz/-32.4dB	1kHz/+22.3dB	0 dB	C-MSG	45+-1	
2kHz/-58.4dB	1kHz/-3.7dB	0 dB	C-MSG	45+-1	
2kHz/-28.9dB	1kHz/-24.7dB	-20dB	C-MSG	11+-1	
2kHz/-60.5dB	1kHz/-24.7dB	-20dB	C-MSG	45+-1	
400Hz/-26.4dB	1kHz/-24.7dB	-20dB	3-kHz	11+-1	
400Hz/-60.5dB	1kHz/-24.7dB	-20dB	3-kHz	45+-1	
400Hz/-26.4dB	1kHz/-24.7dB	-20dB	15-kHz	11+-1	
400Hz/-60.5dB	1kHz/-24.7dB	-20dB	15-kHz	45+-1	
2100Hz/-31.5dB	1kHz/-24.7dB	-20dB	Program	11+-1	
2100Hz/-65.5dB	1kHz/-24.7dB	-20dB	Program	45+-1	
5kHz/-26.4dB	1kHz/-24.7dB	-20dB	50 kbit	11+-1	
5kHz/-60.4dB	1kHz/-24.7dB	-20dB	50 kbit	45+-1	

4-23. INTERMODULATION DISTORTION

Test Equipment Required

HP 3336B Synthesizer
HP 4436A Attenuator
Low Capacitance/Low Crosstalk Cables

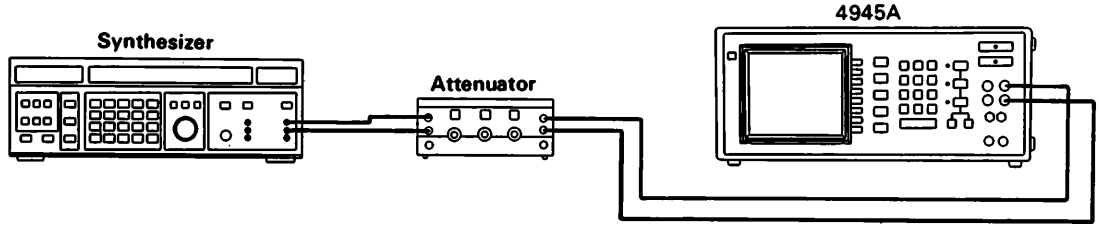

Setup Conditions

Connect the test equipment as shown above. Connect the signal cable to the 4945A receiver input.

4945A:	Test Mode - IMD Receiver Impedance - 600 ohms
3336B:	Output - 600 ohms Frequency - See table Amplitude - See table
4436A:	Attenuation - See table

Procedure

1. Connect the 4945A transmitter output to the receiver input.
2. Set up the 3336B frequency and level according to the tables below.
3. Set the 4436A attenuation shown for each table.
4. Compare the IMD readings on the 4945A with the specifications given in the table.
5. If the display shows a number more than 1 dB from the specified result, an error condition exists. Diagnostic Modes 15 and 16 can help isolate the problem.

Intermodulation Distortion (High Level) Table

4945A Output Level = 0.0 dB
4436A Attenuation = 10 dB

3336B Level (dBm)	3336B Frequency (Hz)	4945A IMD Reading
+6.25	520	11 dB +-1
+5.50	2240	11 dB +-1
+2.53	1900	11 dB +-1
-53.5	520	70 dB +-1
-53.5	2240	70 dB +-1
-56.5	1900	70 dB +-1

Intermodulation Distortion (Low Level) Table

4945A Output Level = -39 dB
4436A Attenuation = 49 dB

3336B Level (dBm)	3336B Frequency (Hz)	4945A IMD Reading
+6.25	520	11 dB +-1
+5.50	2240	11 dB +-1
+2.53	1900	11 dB +-1
-53.5	520	70 dB +-1
-53.5	2240	70 dB +-1
-56.5	1900	70 dB +-1

4-24. PEAK-TO-AVERAGE RATIO

Test Equipment Required

Low Capacitance Cable

Setup Conditions

Connect the 4945A transmitter output to the receiver input.

4945A: Test Mode - P/AR
Impedance - 600 ohm (transmitter and receiver)
Level See table

Procedure

1. Set the 4945A level as shown in the table below.
2. The P/AR reading shown on the display should be within the specification shown in the table.

4945A Level	P/AR Reading	Specification
0 dBm		100 +-2
-11 dBm		100 +-2
-22 dBm		100 +-2
-33 dBm		100 +-2
-39 dBm		100 +-2

4-25. AMPLITUDE JITTER

Test Equipment Required

HP 3325A Synthesizer
HP 3585A Spectrum Analyzer
HP 8116A Pulse/Function Generator
HP 11048C 50 ohm load
550 ohm resistor
Low Capacitance/Low Crosstalk Cables

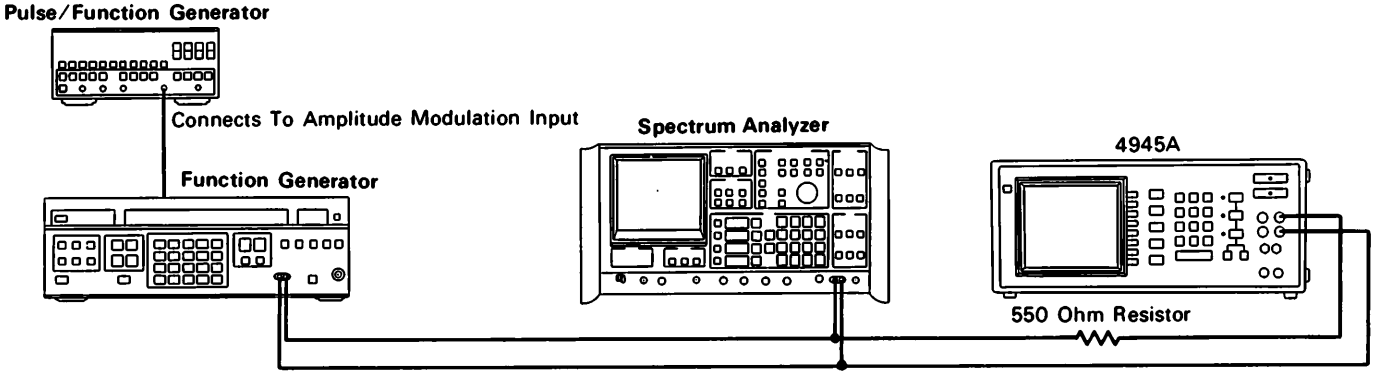

Setup Conditions (for Calibration Procedure)

Connect the test equipment as shown above.

4945A:
Test Mode - Jitter
Band Measurement - See table
Amplitude Jitter - ON
Phase Jitter - OFF

3325A:
Frequency - 1000 Hz
Amplitude - See tables
Amplitude Modulation - ON
Low Voltage Range selected

3585A:
Center Frequency - 1000 Hz, initially
Freq. Span - 200 Hz
Input Impedance - 1 Megohm
Sweep - Manual
dB/Div - 10 dB
Resolution BW - 10 Hz
Video BW - 3 Hz
Counter - On
Autorange - On
REF LVL Track - On then cycle Off and then back On

8116A:
Mode - Normal
Function - Sinewave
Amplitude - 1.0 volts initially, then see table
Frequency - 100 Hz initially, then see table
Offset - 0.00V
Disable - Off, Limit - Off, Complement - Off
Control - All Off
Terminate output with 50 ohm load

Calibration Procedure

1. Press the Amplitude Calibration button on the 3325A.

2. Set the amplitude of the 1000 Hz carrier from the 3325A to the level shown in the table (Column A).

3. Set the 8116A frequency to 100 Hz and set the amplitude to the nominal value in the table for the desired % modulation (Column B).

4. Set the Carrier Level (1000 Hz) to 0.00 dB offset.
   On the 3585A set the RANGE to the level shown in the table (Column C).
   Press: MKR->CF
   Set the dB/Div to 1 dB
   Using the MODIFY and LEVEL keys on the 3325A, adjust the level to read -5.2 dBv +-.1 dB or -41.2 dBv +-.1 dB.
   Set the OFFSET to On
   Press: ENTER OFFSET

5. Measure the sideband level.
   On the 3585A, Set the Center Frequency to 1100 Hz.
   Set Ref Level to the value listed in the table (Column D).
   Press MKR->CF

   Adjust the 8116A amplitude to get the proper sideband level listed in the table (Column E).
   Record this level in the table (Column F).

6. Recheck the carrier level.
   On the 3585A, set the Center Frequency to 1000 Hz.
   Set the Reference Level to the Range level and press; MKR->CF.
   The Marker Level should be approximately +-.02 dB. If not, repeat steps 4 and 5 above.

7. Repeat steps 2 through 6 for the other 3325A level shown in column A.

8. Use the 8116A amplitude calibration levels in the tables below.

Amplitude Jitter Calibration Table

Setup and Calibration for Tests with carrier at -3 dBm +-1 dB (600 ohm)

A	C	D	B	F	E	
3325A 1000 Hz Level in dBm	3585A Range & Ref Level to measure carrier in dBV	3585A Ref Level to measure sideband in dBV	8116A Amplitude		Resulting Sideband Level in dB	Modulation Level in %
			Nominal in volts	Your setting		
14.28	-3.0	-27.0	1.00		-26.02	10.0
14.28	-3.0	-17.0	3.80		-14.40	38.1

Setup and Calibration for Tests with carrier at -39 dBm +-1 dB (600 ohm)

A	C	D	B	F	E	
3325A 1000 Hz Level in dBm	3585A Range & Ref Level to measure carrier in dBV	3585A Ref Level to measure sideband in dBV	8116A Amplitude		Resulting Sideband Level in dB	Modulation Level in %
			Nominal in volts	Your setting		
-21.7	-38.0	-64.0	1.00		-26.02	10.0
-21.7	-38.0	-52.0	3.80		-14.40	38.1

Accuracy Verification Procedure

1. Set the amplitude of the 8116A to the calibration level measured in the Calibration Procedure.

   Set the 8116A frequency according to the tables below.

2. Connect the 3325A (with 550 ohm resistor) to the 4945A receiver input.

3. The percent value is displayed on the 4945A. Compare the displayed values with the specifications given in the table.

   Note: The 4945A takes approximately 5 to 10 seconds to process and display jitter measurements.

4. There is a separate table for each frequency band. Check each band at the two carrier levels and the two sideband levels.

   Note that the 8116A has more than one frequency setting for each table.

5. You can save time be setting a particular sideband level and then checking that level in all three bands before resetting the sideband level.

Amplitude Jitter Table, (4 - 300 Hz Band)

Test level = -3 dBm (600 ohm)

8116A Amplitude	3585A Sideband Level dB	8116A Freq = 8 Hz	8116A Freq = 50 Hz	8116A Freq = 240 Hz	Specification
	-26.02				10.0% +-.7%
	-14.40				38.1% +-2.1%

Test level = -39 dBm (600 ohm)

8116A Amplitude	3585A Sideband Level dB	8116A Freq = 8 Hz	8116A Freq = 50 Hz	8116A Freq = 240 Hz	Specification
	-26.02				10.0% +-.7%
	-14.40				38.1% +-2.1%

Amplitude Jitter Table, (4 - 20 Hz Band)

Test level = -3 dBm (600 ohm)

8116A Amplitude	3585A Sideband Level dB	8116A Freq = 8 Hz	8116A Freq = 16 Hz	Specification
	-26.02			10.0% +-.7%
	-14.40			38.1% +-2.1%

Test level = -39 dBm (600 ohm)

8116A Amplitude	3585A Sideband Level dB	8116A Freq = 8 Hz	8116A Freq = 16 Hz	Specification
	-26.02			10.0% +-.7%
	-14.40			38.1% +-2.1%

Amplitude Jitter Table, (20 - 300 Hz Band)

Test level = -3 dBm (600 ohm)

8116A Amplitude	3585A Sideband Level dB	8116A Freq = 20 Hz	8116A Freq = 70 Hz	8116A Freq = 240 Hz	Specification
	-26.02				10.0% +-.7%
	-14.40				38.1% +-2.1%

Test level = -39 dBm (600 ohm)

8116A Amplitude	3585A Sideband Level dB	8116A Freq = 20 Hz	8116A Freq = 70 Hz	8116A Freq = 240 Hz	Specification
	-26.02				10.0% +-.7%
	-14.40				38.1% +-2.1%

4-26. PHASE JITTER

Test Equipment Required

HP 3325A Synthesizer
HP 3585A Spectrum Analyzer
HP 8116A Pulse/Function Generator
HP 11048C 50 ohm load
550 ohm resistor
Low Capacitance/Low Crosstalk Cables

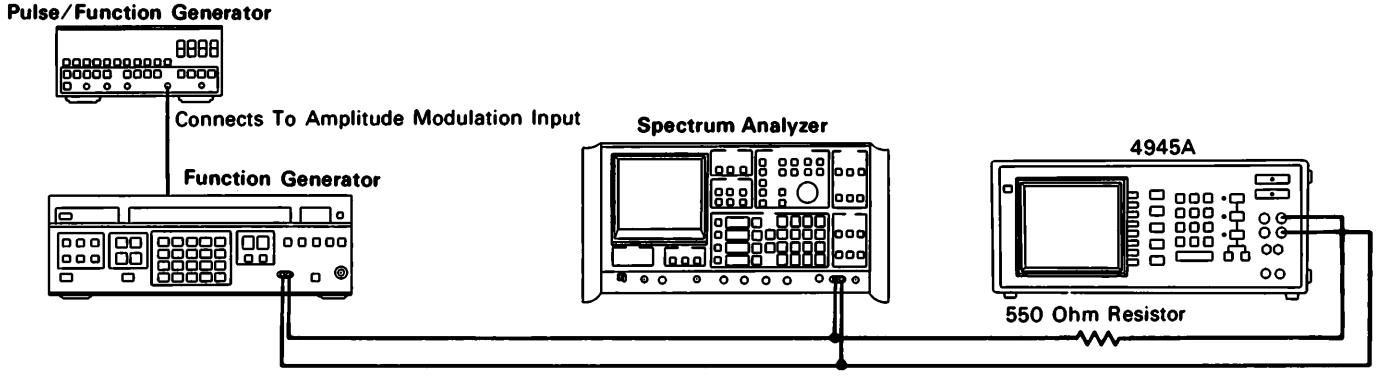

Setup Conditions (for Calibration Procedure)

Connect the test equipment as shown above.

4945A:
Test Mode - Jitter
Band Measurement - See table
Amplitude Jitter - ON
Phase Jitter - OFF

3325A:
Frequency - 1000 Hz
Amplitude - See tables
Phase Modulation - ON
Low Voltage Range selected

3585A:
Center Frequency - 1000 Hz, initially
Freq. Span - 200 Hz
Input Impedance - 1 Megohm
Sweep - Manual
dB/Div - 10 dB
Resolution BW - 10 Hz
Video BW - 3 Hz
Counter - On
Autorange - On
REF LVL Track - On then cycle Off and then back On

8116A:
Mode - Normal
Function - Sinewave
Amplitude - 1.0 volts initially, then see table
Frequency - 100 Hz initially, then see table
Offset - 0.00V
Disable - Off, Limit - Off, Complement - Off
Control - All Off
Terminate output with 50 ohm load

Calibration Procedure

1. Press the Amplitude Calibration button on the 3325A.

2. Set the amplitude of the 1000 Hz carrier from the 3325A to the level shown in the table (Column A).

3. Set the 8116A frequency to 100 Hz and set the amplitude to the nominal value in the table for the desired % modulation (Column B).

4. Set the Carrier Level (1000 Hz) to 0.00 dB offset.
   On the 3585A set the RANGE to the level shown in the table (Column C).
   Press: MKR->CF
   Set the dB/Div to 1 dB
   Using the MODIFY and LEVEL keys on the 3325A, adjust the level to read -5.2 dBv +-.1 dB or -41.2 dBv +-.1 dB.
   Set the OFFSET to On
   Press: ENTER OFFSET

5. Measure the sideband level.
   On the 3585A, Set the Center Frequency to 1100 Hz.
   Set Ref Level to the value listed in the table (Column D).
   Press MKR->CF

   Adjust the 8116A amplitude to get the proper sideband level listed in the table (Column E).
   Record this level in the table (Column F).

6. Recheck the carrier level.
   On the 3585A, set the Center Frequency to 1000 Hz.
   Set the Reference Level to the Range level and press; MKR->CF.
   The Marker Level should be approximately +-.02 dB. If not, repeat steps 4 and 5 above.

7. Repeat steps 2 through 6 for the other 3325A level shown in column A.

8. Use the 8116A amplitude calibration levels in the tables below.

Phase Jitter Calibration Table

Setup and Calibration for Tests with carrier at -3 dBm +-1 dB (600 ohm)

A	C	D	B	F	E	
3325A 1000 Hz Level in dBm	3585A Range & Ref Level to measure carrier in dBV	3585A Ref Level to measure sideband in dBV	8116A Amplitude		Resulting Sideband Level in dB	Modulation Level in Degrees
			Nominal in mV	Your setting		
7.79	-3.0	-27.0	60.0		-26.02	11.5
7.79	-3.0	-17.0	180		-16.40	34.4

Setup and Calibration for Tests with carrier at -39 dBm +-1 dB (600 ohm)

A	C	D	B	F	E	
3325A 1000 Hz Level in dBm	3585A Range & Ref Level to measure carrier in dBV	3585A Ref Level to measure sideband in dBV	8116A Amplitude		Resulting Sideband Level in dB	Modulation Level in Degrees
			Nominal in mV	Your setting		
-28.21	-38.0	-64.0	60.0		-26.02	11.5
-28.21	-38.0	-52.0	180		-16.40	34.4

Accuracy Verification Procedure

1. Set the amplitude of the 8116A to the calibration level measured in the Calibration Procedure.

   Set the 8116A frequency according to the tables below.

2. Connect the 3325A (with 550 ohm resistor) to the 4945A receiver input.

3. The phase value is displayed on the 4945A. Compare the displayed values with the specifications given in the table.

   Note: The 4945A takes approximately 5 to 10 seconds to process and display jitter measurements.

4. There is a separate table for each frequency band. Check each band at the two carrier levels and the two sideband levels.

   Note that the 8116A has more than one frequency setting for each table.

5. You can save time be setting a particular sideband level and then checking that level in all three bands before resetting the sideband level.

Phase Jitter Table, (4 - 300 Hz Band)

Test level = -3 dBm (600 ohm)

8116A Amplitude	3585A Sideband Level dB	8116A Freq = 8 Hz	8116A Freq = 50 Hz	8116A Freq = 240 Hz	Specification
	-26.02				11.5° +-.8°
	-16.40				34.4° +-1.9°

Test level = -39 dBm (600 ohm)

8116A Amplitude	3585A Sideband Level dB	8116A Freq = 8 Hz	8116A Freq = 50 Hz	8116A Freq = 240 Hz	Specification
	-26.02				11.5° +-.8°
	-16.40				34.4° +-1.9°

Phase Jitter Table (4 - 300 Hz Band)

3325A level on the 3585A = 0 dB

Sideband Level dB	8116A Freq= 8 Hz	3585A Freq=50 Hz	Freq=240 Hz	Specification
-26				11.5o +-.8o°
-20				22.9o +-1.3o°
-16.4				34.4o +-1.9o°

3325A level on the 3585A = -25 dB

Sideband Level dB	8116A Freq= 8 Hz	3585A Freq=50 Hz	Freq=240 Hz	Specification
-26				11.5o +-.8o°
-20				22.9o +-1.3o°
-16.4				34.4o +-1.9o°

3325A level on the 3585A = -40 dB

Sideband Level dB	8116A Freq= 8 Hz	3585A Freq=50 Hz	Freq=240 Hz	Specification
-26				11.5o +-.8o°
-20				22.9o +-1.3o°
-16.4				34.4o +-1.9o°

Transients Testing Background Information

When testing transients, it is important to understand how the 8116A an the 3325A are being used.

The 8116A is used to generate a positive or negative pulse depending upon the complement setting. This pulse is applied to the amplitude modulation input of the 3325A. When amplitude modulation is selected on the 3325A, the amplitude of the output signal (with no modulation) is halved; however, the display still indicates the programmed amplitude. When the output signal is modulated 100%, the maximum amplitude of the modulation output equals the programmed amplitude. A modulation input of approximately -5 volts peak results in 100% modulation.

Since pulses are being used, a +5 volt pulse cuts off the output signal (no modulation) and a -5 volt pulse doubles the output (100% modulation).

Refer to the 3325A Operating and Service manual for more information.

For positive gain hits, the 8116A complement is ON. A negative going pulse riding on a positive dc level is output to the 3325A (See Figure A). The resulting 3325A output (See Figure B) is a carrier level which is lower than the amplitude shown on the 3325A display and a positive gain hit level which is measured by the 4945A.

For negative gain hits, the 8116A complement is OFF. A positive going pulse riding on a near zero volt level is output to the 3325A (See Figure C). The resulting 3325A output is a carrier level which is near the amplitude shown on the 3325A display and a negative gain hit level which is measured by the 4945A (See Figure D).

For phase hits, the pulses from the 8116A cause a phase shift of the 3325A output. Refer to the 3325A Operating and Service manual for more information on phase modulation.

Remember that in the transients measurement setup, a 50 ohm load is used to terminate the 8116A output. The 3325A amplitude modulation input is 20 k-ohms and the phase modulation input is 10 k-ohms.

Note

Set the IMPULSE LOW to 100 dBrn to avoid measuring Impulse Noise while doing Phase Hits, Gain Hits and Dropouts.

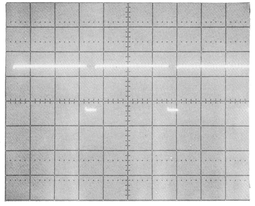

FIGURE A

COMPL ON

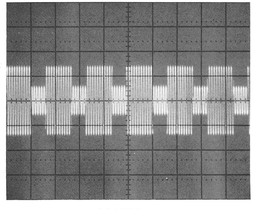

FIGURE B

COMPL ON

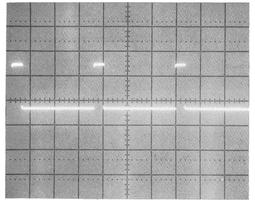

FIGURE C

COMPL OFF

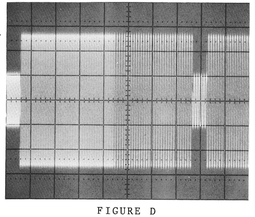

FIGURE D

COMPL OFF

4-27. PHASE HITS

Test Equipment Required

3325A Synthesizer
Low Capacitance/Low Crosstalk Cables

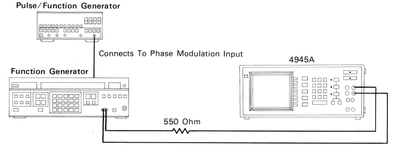

Setup Conditions

Connect the test equipment as shown above. Connect the signal cable to the 4945A receiver input.

4945A:	Test Mode - Transients Phase Hit Threshold - see table
3325A:	Function - Sinewave Amplitude - 20.28 dBm Frequency - 1 kHz

Procedure

1. Set the 4945A to one of the phase thresholds listed in the table below.

2. Press phase mode on the 3325A. Enter the degrees of phase from the table and press Degrees on the 3325A.

   When Degrees is pressed, the frequency shifts to give a positive phase hit. Enter 0 degrees phase to give a negative phase hit. Two phase hits are recorded by the 4945A.

   Note: Phase hits are recorded only if the phase angle is more than the set threshold.

3. Do steps 1 and 2 for each line of the table. The number of phase hits appears on the 4945A display and the specification is given in the table.

Phase Hits Table

4945A Threshold Setting	3325A Phase Angle	4945A Reading	Spec.
10	8		0
10	12		2
20	17		0
20	23		2
35	31.5		0
5	38.5		2
45	40.5		0
45	49.5		2

4-28. GAIN HITS

Test Equipment Required

HP 3325A Synthesizer
HP 8116A Pulse/Function Generator
550 ohm resistor
Low Capacitance Cables

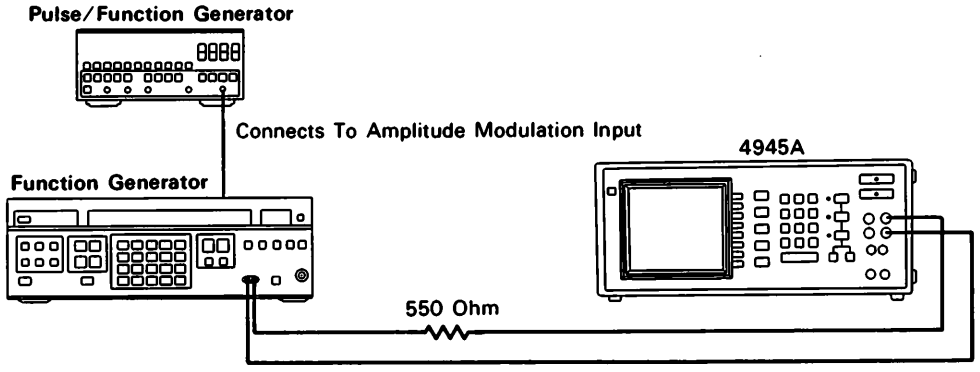

Setup Conditions

Connect the test equipment as shown above.
Connect the 3325A signal cable to the 4945A receiver input.

4945A: Test Mode - Level/Freq initially, then Transients
Input Impedance - 600 ohm
Count Rate - See table
Gain Hits Threshold - 2 dB, then see table
Filter - C-Message

3325A: Frequency - 1000 Hz
Mode - Modulation, press Blue key, Store
Level - 17.26 dBm initially, then see table

8116A: Frequency - 6 Hz
Amplitude - See table
Function - Pulse, positive
Mode - E burst
Burst - 6
WID - 6 msec
HIL - 0 volts
LOL - -0.40 volts

Procedure For Measurement Calibrations

1. Set up the 3325A level to 17.26 dBm (50 ohm) initially and then according to the table below.

2. Set up the 8116A pulse levels, pulse width and frequency according to the initial conditions above. With the 4945A in Level Frequency, toggle the complement switch on the 8116A. Look for a 1.5 dB change. Fine tune the 8116A pulse until a 1.5 dB change is obtained. This sets up the hit level for the first test. The hit level must be set for each test.

3. Set up the 4945A according to the table below.

4. The gain hits are displayed on the 4945A. Compare your reading with the gain hit specification in the table.

Gain Hits Table (Positive)

8116A: Complement - ON
Pulse width - 6 msec
Frequency - 6 Hz

3325A Ampl. dBm	8116A Nominal Hi L	8116A Nominal Lo L	8116A Your Actual Hi L	8116A Your Actual Lo L	Hit Level	4945A Count Rate	4945A Gain Hit Thld. dB	Count Spec.
+17.26	0	-.40			1.5 dB	7/sec	2	0
+17.26	0	-.80			2.5 dB	7/sec	2	15
+22.05	1	-2.28			10.5 dB	7/sec	10	15

Gain Hits Table (Negative)

8116A: Complement - ON
Pulse width - 6 msec
Frequency - 6 Hz

3325A Ampl. dBm	8116A Nominal Hi L	8116A Nominal Lo L	8116A Your Actual Hi L	8116A Your Actual Lo L	Hit Level	4945A Count Rate	4945A Gain Hit Thld. dB	Count Spec.
+21.0	-1.55	-2.3			1.5 dB	7/sec	2	0
+21.0	-1.14	-2.3			2.5 dB	7/sec	2	15
+21.0	-.99	-2.3			10.5 dB	7/sec	10	15

4-29. DROPOUTS

Test Equipment Required

HP 3325A Synthesizer
HP 8116A Pulse/Function Generator
550 ohm resistor
Low Capacitance Cables

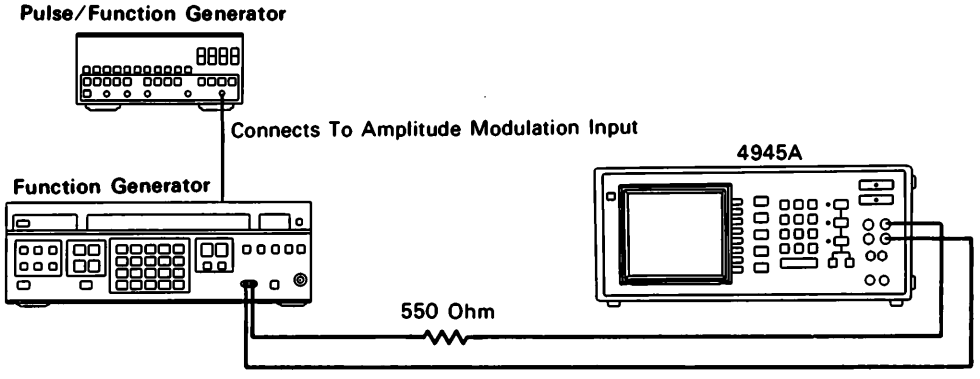

Setup Conditions

Connect the test equipment as shown above.
Connect the 3325A signal cable to the 4945A receiver input.

4945A: Test Mode - Level/Frequency, then Transients
Input Impedance - 600 ohm
Count Rate - See table
Filter - C-Message

3325A: Frequency - 1000 Hz
Mode - Modulation, press Blue key, Store
Level - See table

8116A: Frequency - See table
Amplitude - See table
Function - Pulse, positive
Mode - E burst
E burst - 3

Procedure

1. Set up the 3325A level according to the table below.

2. Set up the 8116A pulse levels, pulse width and frequency according to the initial conditions below. With the 4945A in Level Frequency, toggle the complement switch on the 8116A. Look for an 11 dB change. Fine tune the 8116A pulse until an 11 dB change is obtained. This sets up the dropout for the first test. The dropout level must be set for each test.

3. Set up the 4945A according to the table below.

4. The dropouts are displayed on the 4945A. Compare your reading with the dropout specification in the table.

Dropouts Table

8116A: Complement - OFF
Pulse Width - 6 msec
Frequency - .9 Hz

4945A: Count Rate - 8/sec

3325A Ampl. dBm	8116A Nominal Hi L	8116A Nominal Lo L	8116A Your Actual Hi L	8116A Your Actual Lo L	Dropout (4945A Level)	4945A Dropout Count
+21.0	+1.00	-3.0			11 dB (0 dBm - Comp OFF) (11 dBm - Comp ON)	0
+21.0	+1.00	-4.66			13 dB (0 dBm - Comp OFF) (13 dBm - Comp ON)	3
-26.5	+1.00	-3.0			11 dB (-37 dBm-Comp OFF) (-48 dBm-Comp ON)	0
-26.5	+1.00	-4.66			13 (-37 dBm-Comp OFF) (-51 dBm-Comp ON)	3

4-30. IMPULSE NOISE

Test Equipment Required

HP 3325A Synthesizer
HP 8116A Pulse/Function Generator
Low Capacitance Cables

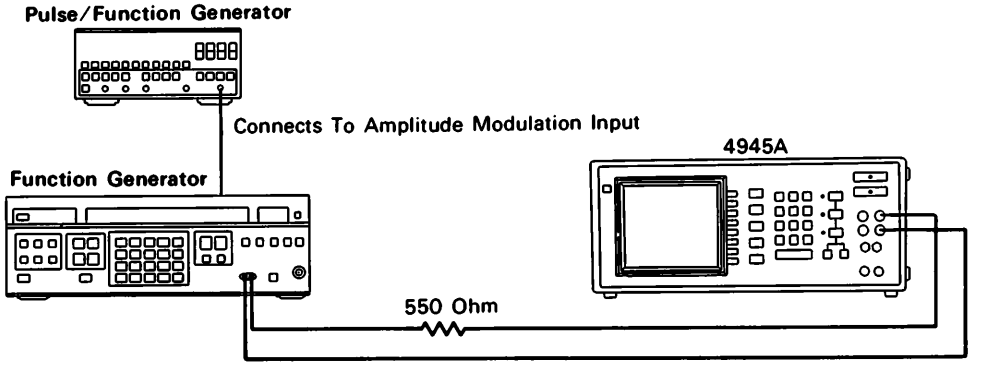

Setup Conditions

Connect the test equipment as shown above.
Connect the 3325A signal cable to the 4945A receiver input.

4945A: Test Mode - Level/Freq initially, then Transients
Impulse Threshold - set for each table
Treshold Step - See table
Count Rate - See table
Count Time - 1 minute

3325A: Frequency - 1800 Hz
Amplitude Modulation - ON
Level - See table

8116A: Frequency - 6 Hz
Pulse Width - 6 msec
Mode - E burst
Hi L - See table
Lo L - See table
E burst - 3

Threshold Considerations

The threshold levels given in the tables were set by considering the following information.
For this measurement, the 3325A outputs a level which is measured on the 4945A in the Level/Frequency mode. The 3325A levels given in the tables are approximate and may vary between 3325As. Reading the level on the 4945A provides a consistent level, however, some conversion factors are taken into account.

For example, to set a 70 dBrn level requires a -20 dBm peak signal. The level displayed on the 4945A is an rms reading which is 3 dB lower than peak. Thus for 70 dBrn, the 4945A reading would be -23 dB.

Note: These are steady state conditions. The actual transient levels are adjusted down 0.5 dB to compensate for modulation overshoot which triggers the transients receiver.

For the impulse measurement the C-Message filter is switched in and the filter factor must be taken into account. At 1800 Hz, +1.5 dBm must be added to the level to compensate for the filter. Thus 70 dBrn = -23 dBm + 1.5 dBm or a level of -21.5 dBm displayed on the 4945A.

Here is an example using a 72 dBrn threshold.

74 dBrn -

73 dBrn - Count all

72 dBrn - Threshold level

71 dBrn - No count

70 dBrn - Peak of steady state carrier set in Level/Freq.

Procedure

1. Three 4945A threshold levels are tested; 30 dBrn, 72 dBrn and 105 dBrn. There is a separate table for each threshold setting.

   For each threshold chart, the actual HiL and LoL readings must be recorded. These readings depend on the particular 8116A and 3325A combination being used.

2. Set the 4945A to one of the three Impulse Noise thresholds.

For each line in the table, do the following steps.

3. Set the 3325A output level so that the 4945A reads the reference level in Level/Frequency mode (See the COMPL ON column in the table).
   This level is set with the 8116A Complement ON.

4. Set the 8116A to Complement OFF and set the pulse level (See the COMPL OFF column in the table).

5. Set the 8116A to Complement ON.

6. Select the transients test mode on the 4945A. Set the counts per second, threshold and step size.

7. Press the MAN button on the 8116A and read the impulse noise counts on the 4945A display.

8. Compare your results with the expected results in the table.

Note: Repeat the setup conditions for each table and for any change of equipment or operating conditions.

Impulse Noise Table For 72 dBrn Threshold

4945A Count Rate = 7 per second
8116A Frequency = 6 Hz

3325A Ampl. dBm	8116A Pulse Level Nominal and (Actual) Hi L COMPL ON	Lo L COMPL OFF	4945A Levels COMPL ON	COMPL OFF	Thld Step Size	4945A Impulse Reading LO	MID	HI
-4.26	0 ( )	-1.18 ( )	-21.5	-19	3	3	0	
+.62	1 ( )	-.22 ( )	-21.5	-16	3	3	3	0
+.62	1 ( )	-1.31 ( )	-21.5	-13	3	3	3	3
-4.26	0 ( )	-1.54 ( )	-21.5	-19	4	3	0	0
+.62	1 ( )	-.55 ( )	-21.5	-15	4	3	3	0
+.56	1.6 ( )	-.15 ( )	-21.5	-11	4	3	3	3
+.62	1 ( )	-.4 ( )	-21.5	-19	6	3	0	0
+.56	1 ( )	-1.31 ( )	-21.5	-13	6	3	3	0
+5.52	1.6	-1.7	-21.5	-7	6	3	3	3

Impulse Noise Table For 105 dBrn Threshold

4945A Count Rate = 8 per second
8116A Frequency = 7 Hz

3325A Ampl. dBm	8116A Pulse Level Nominal and (Actual) Hi L COMPL ON	Lo L COMPL OFF	4945A Levels COMPL ON	COMPL OFF	Thld Step Size	4945A Impulse Reading LO	MID	HI
+11.77	0 ( )	-.22 ( )	+11.5	+12.5	3	0	0	0
+11.77	0 ( )	-.83 ( )	+11.5	+14	3	3	0	0
+11.77	0 ( )	-1.62 ( )	+11.5	+16	3	3	3	0
+13.77	.33 ( )	-1.98 ( )	+11.5	+18	3	3	3	3

Impulse Noise Table For 30 dBrn Threshold

4945A Count Rate = 8 per second
8116A Frequency = 7 Hz

3325A Ampl. dBm	8116A Pulse Level Nominal and (Actual) Hi L COMPL ON	Lo L COMPL OFF	4945A Levels COMPL ON	COMPL OFF	Thld Step Size	4945A Impulse Reading LO	MID	HI
-46.3	0 ( )	-.22 ( )	-63.5	-62.5	3	0	0	0
-46.3	0 ( )	-.9 ( )	-63.5	-61	3	3	0	0
-46.3	0 ( )	-1.62 ( )	-63.5	-59	3	3	3	0
-42.5	1 ( )	-.72 ( )	-63.5	-57	3	3	3	3

4-31. ENVELOPE DELAY TESTS

4-32. Transmitter Amplitude Modulation

Test Equipment Required

HP 3582A Spectrum Analyzer
600 ohm load
Low Capacitance Cables

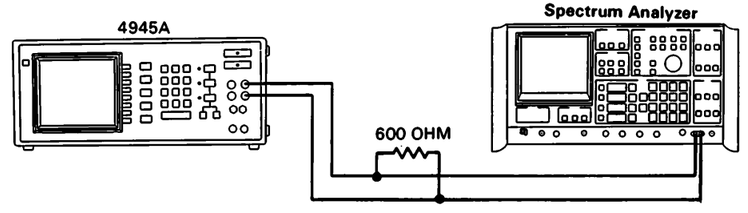

Setup Conditions

Connect the test equipment as shown above. Connect the 4945A output signal cable to the 3582A input.

4945A: Test Mode - Envelope Delay
Transmit Impedance - 600 ohms
Amplitude - See table
Frequency - See table

3582A: Input - Isolated
Filter Shape - Flat top
Bandwidth - 250 Hz
Center Frequency - See table

Procedure

1. Set the 4945A level and frequency as shown in the table.
2. Set the 3582A center frequency to the 4945A frequency. Put the 3582A marker to this frequency and press SET REF.
3. Move the marker to the upper and lower sidebands.
4. Subtract the sideband amplitude from the carrier amplitude and compare your readings with the specification in the table.
5. Do the above steps for each line of the table.

EDD Transmitter Amplitude Modulation Table

4945A		Sideband	Actual Readings	
Level	Frequency	Specs.	Upper	Lower
0 dBm	1804 Hz	-11.2 to -13.0		
0 dBm	300 Hz	-11.2 to -13.0		
0 dBm	4000 Hz	-11.2 to -13.0		
-40 dBm	1804 Hz	-11.2 to -13.0		

4-33. Transmitter Modulation Frequency

Test Equipment Required

HP 3582A Spectrum Analyzer
600 ohm load
Low Capacitance Cables

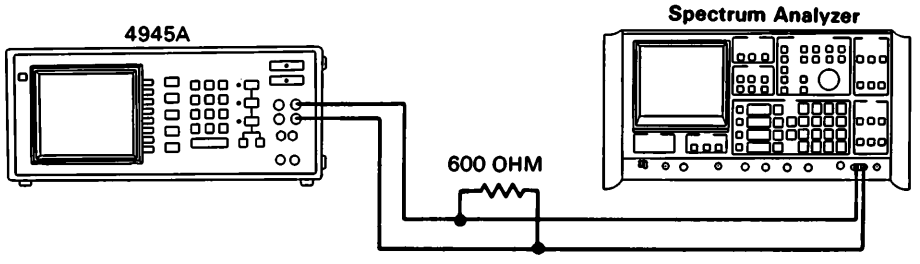

Setup Conditions

Connect the test equipment as shown above. Connect the 4945A output signal cable to the 3582A input.

4945A: Test Mode - Envelope Delay
Transmit Impedance - 600 ohms
Amplitude - 0 dB
Frequency - 1000 Hz

3582A: Input - Isolated
Filter Shape - Flat top
Bandwidth - 5 Hz (to get .02 Hz accuracy)
Center Frequency - 1083 Hz

Procedure

1. Put the 3582A marker on the peak of the 1083 Hz signal.

2. The peak frequency must be between 1083.25 Hz and 1083.41 Hz.

4-34. Transmitter Level and Flatness

Test Equipment Required

HP 3455A Digital Voltmeter
HP 04945-62615 Test Amplifier
600 ohm load
Low Capacitance Cables

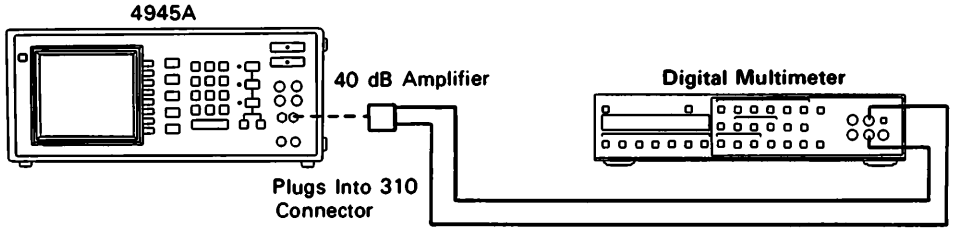

Setup Conditions

Connect the test equipment as shown above. Connect the 4945A output signal cable to the 3455A input.

4945A:	Test Mode - Envelope Delay Transmit Impedance - 600 ohms Amplitude - See table Frequency - See table
3455A:	Input - AC, autorange
04945-62615:	Gain - See table

Procedure

1. Set the 4945A level and frequency to 0.0 dBm and 1 kHz. Set the amplifier gain to 0 dB. The reading on the 3455A should be between .802 volts and .839 volts. This is the level accuracy test.

2. Set the 4945A level and frequency as shown in the table below.

3. Set the amplifier gain as shown in the table below.

4. Record the voltage reading on the 3455A. The voltage level at each frequency should be within the tolerance (<2 dB) shown in the table.

5. Do steps 2 through 4 for each line of the table.

ED Transmitter Flatness Table

4945A Level	Amplifier Level	4945A Frequency 300 Hz	1804 Hz	4000 Hz	Specification < 2 dB change between freq.
0 dBm	0 dB				.615 - .975 V
+10 dBm	0 dB				1.946 - 3.084 V
-20 dBm	+20 dB				.615 - .975 V
-40 dBm	+40 dB				.615 - .975 V

Note: The specification voltages given are calculated for a less than 2 dB change over the three frequencies.

4-35. Envelope Delay Receiver Test

Test Equipment Required

Low Capacitance/Low Crosstalk Cables

Setup Conditions

Connect the 4945A transmitter output to the receiver input.

4945A: Test Mode - Envelope Delay
Impedance - 600 ohm (transmit and receive)
Level - See procedure
Frequency - See procedure

Procedure

1. Set the 4945A level and frequency to 0.0 dBm and 1804 Hz. Let the receiver reading stabilize and press Delay Zero. This sets up a reference for the remaining readings.

2. Set the 4945A level and frequency as shown in the table below.

3. The measured delay is displayed on the 4945A. Compare the reading with the specifications in the table.

Receiver Delay Table

4945A Frequency = 1800 Hz

Level	Delay +-30 us	Change <=5 us
0		
-10		
20		
-30		
-40		

4945A Frequency = 300 Hz

Level	Delay +-30 us	Change <=5 us
0		
-10		
-20		
-30		
-40		

4-36. TWO-WIRE RETURN LOSS

Test Equipment Required

600 ohm, .1%, resistor (0698-7408)
900 ohm, .1%, resistor (0698-6344)

Setup Conditions

4945A: Test Mode - 2-Wire Return Loss

Procedure

1. In Two Wire Return Loss, Press Measure All on the 4945A.
2. Set the output level and reference impedance as shown in the tables below.
3. Check the displayed return loss values with the transmitter jacks Open, Shorted and then terminated with the proper resistor.
4. The values for ECHO, SRL Low and SRL High are displayed at the same time on the 4945A.
5. Record the displayed values in the table below and compare the values against the specifications listed in the table.
6. Select the sine wave return loss test (SINE 1 kHz) and repeat the test.

Two Wire Return Loss Table

Transmit Level = -2.0 dBm
Reference Impedance = 900 ohms

Return Loss Signal	Specification +-.5 dB	Open Circuit	Short Circuit	900 ohms Terminated
ECHO	28.3 dB			
L Low	18.9 dB			
SRL High	36.6 dB			
Sine- 1kHz	28.3 dB			

Transmit Level = -10.0 dBm
Reference Impedance = 600 ohms

Return Loss Signal	Specification +-.5 dB	Open Circuit	Short Circuit	600 ohms Terminated
ECHO	24.7 dB			
SRL Low	15.5 dB			
SRL High	32.9 dB			
Sine- 1kHz	24.3 dB			

4-37. FOUR-WIRE RETURN LOSS

Test Equipment Required

4436B Attenuator
4945A Transmission Impairment Measurement Set
Low Capacitance/Low Crosstalk Cables

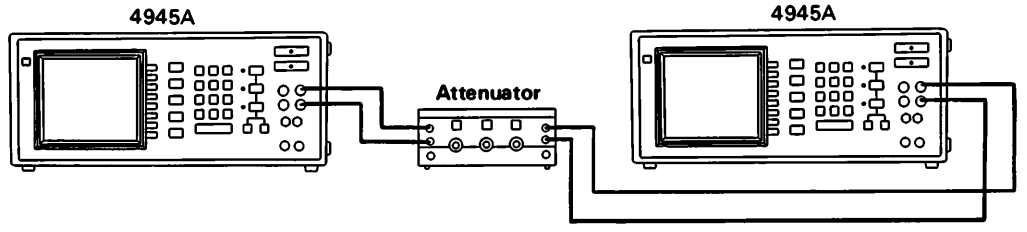

Setup Conditions

Connect the test equipment as shown above.
Connect the signal cable from the attenuator to the 4945A test unit receiver input.

4945A: (Test Unit)	Test Mode - Return Loss, 4-wire (Test Unit) Receive Impedance - 600 ohm
4945A: (Source)	Test Mode - Return Loss, 4-wire Level - -10 dBm Transmit Impedance - 600 ohm
4436B:	Attenuation - See table

Procedure

1. Set the 4436B attenuation to one of the values in the table below.

2. Set the transhybrid loss compensation on the 4945A test unit to the value shown in the table.

3. The return loss in dB is displayed on the 4945A test unit. Check the return loss values in ECHO, SRL Low and SRL high. Record your readings in the table and compare them to the specification given in the table.

Four Wire Return Loss Table

4945A Source Level = -10 dBm

4436B Atten.	4945A Test Unit Received Level	4945A Test Unit Hybrid Compensation Loss	Expected R.L. for ECHO, SRL Low and SRL High +-.5 dB
0 dB	-10 dB	0.0 dB	0 dB
20 dB	-30 dB	0.0 dB	20 dB
40 dB	-50 dB	0.0 dB	40 dB
65 dB	-75 dB	0.0 dB	(over range)
40 dB	-50 dB	10 dB	30 dB
40 dB	-50 dB	20 dB	20 dB
40 dB	-50 dB	30 dB	10 dB
20 dB	-30 dB	20 dB	0 dB
20 dB	-30 dB	30 dB	-10 dB

4-38. RECEIVER HOLDING CIRCUIT IMPEDANCE

Test Equipment Required

4192A Impedance Analyzer

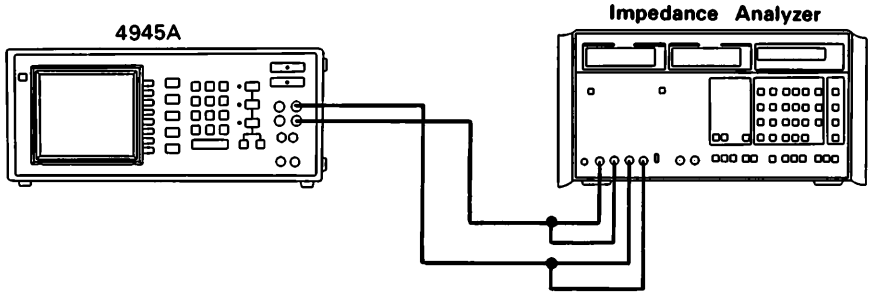

Setup Conditions

Connect the test equipment as shown above. Connect the 4192A four wire probe to the 4945A receiver input.

4945A: Setup - Dial/Hold, Receive Hold Off
Receiver Impedance - 1200 ohms

4192A: |Z| - Phase Measurement
AUTO - Serial Circuit
Frequency - 1000 Hz
Osc. Level - 1 volt
Average - ON
Bias - +12.50 volts (Red light should come on)

Procedure

1. When the setup is complete, the 4192A should read 1200 ohms and -.19 dB.
2. Set the 4192A to R/G and X/B measurement. Select parallel circuit (Mode 3).
3. Record the G and B values with the hold circuit off and on. Record your readings in the chart corresponding to the frequency set on the 4192A.
4. Set the 4192A frequency to each of the four frequencies listed below.
5. Record the G and B values for each frequency.

Frequency = 50 Hz

	G	B
Hold ON		
Hold OFF		
ON - OFF		

Frequency = 1000 Hz

	G	B
Hold ON		
Hold OFF		
ON - OFF		

Frequency = 10 kHz

	G	B
Hold ON		
Hold OFF		
ON - OFF		

Frequency = 110 kHz

	G	B
Hold ON		
Hold OFF		
ON - OFF		

6. Calculate the holding impedance (for each frequency) as follows.

   a. Subtract the Hold OFF value for G and B from the Hold ON value for G and B.

   b. Use these difference values in the formula below.

$$|Z| = \frac{1}{\sqrt{G2 + B2}}$$

   c. The resulting |Z| value is the holding circuit impedance.

   d. The specifications are;

      > 50 k-ohms for frequencies to 10 kHz

      > 20 k-ohms for frequencies to 110 kHz

dB Expressed in Watts and Volts
P = 1 mW V is into 600 ohms

dB	Above Zero Level Watts	Above Zero Level Volts	Below Zero Level Watts	Below Zero Level Volts
0	0.0010	0.775	1.00 X 10^-3	0.7746
1	0.0013	0.869	7.94 X 10^-4	0.6904
2	0.0016	0.975	6.31 X 10^-4	0.6153
3	0.0020	1.094	5.01 X 10^-4	0.5483
4	0.0025	1.227	3.98 X 10^-4	0.4888
5	0.0032	1.337	3.16 X 10^-4	0.4356
6	0.0040	1.545	2.51 X 10^-4	0.3883
7	0.0050	1.734	2.00 X 10^-4	0.3460
8	0.0063	1.946	1.59 X 10^-4	0.3084
9	0.0079	2.183	1.26 X 10^-4	0.2748
10	0.0100	2.449	1.00 X 10^-4	0.2449
11	0.0126	2.748	7.94 X 10^-5	0.2183
12	0.0159	3.084	6.31 X 10^-5	0.1946
13	0.0200	3.460	5.01 X 10^-5	0.1734
14	0.0251	3.882	3.98 X 10^-5	0.1545
15	0.0316	4.356	3.16 X 10^-5	0.1377
16	0.0398	4.888	2.51 X 10^-5	0.1228
17	0.0501	5.483	2.00 X 10^-5	0.1095
18	0.0631	6.153	1.59 X 10^-5	0.0975
19	0.0794	6.904	1.26 X 10^-5	0.0869
20	0.1	7.746	10^-5	7.75 X 10^-2
30	1.0	24.493	10^-6	2.45 X 10^-2
40	10.0	77.460	10^-7	7.75 X 10^-3
50	10^2	244.93	10^-8	2.45 X 10^-3
60	10^3	774.60	10^-9	7.75 X 10^-4
70	10^4	2449.0	10^-10	2.45 X 10^-4
80	10^5	7746.0	10^-11	7.75 X 10^-5
90	10^6	24493.0	10^-12	2.45 X 10^-5
100	10^7	77460.0	10^-13	7.75 X 10^-6

dBrn To dBm Conversion Chart

dBrn	dBm	dBrn	dBm	dBrn	dBm	dBrn	dBm
110	+20	82	-8	54	-36	26	-64
109	+19	81	-9	53	-37	25	-65
108	+18	80	-10	52	-38	24	-66
107	+17	79	-11	51	-39	23	-67
106	+16	78	-12	50	-40	22	-68
105	+15	77	-13	49	-41	21	-69
104	+14	76	-14	48	-42	20	-70
103	+13	75	-15	47	-43	19	-71
102	+12	74	-16	46	-44	18	-72
101	+11	73	-17	45	-45	17	-73
100	+10	72	-18	44	-46	16	-74
99	+9	71	-19	43	-47	15	-75
98	+8	70	-20	42	-48	14	-76
97	+7	69	-21	41	-49	13	-77
96	+6	68	-22	40	-50	12	-78
95	+5	67	-23	39	-51	11	-79
94	+4	66	-24	38	-52	10	-80
93	+3	65	-25	37	-53	9	-81
92	+2	64	-26	36	-54	8	-82
91	+1	63	-27	35	-55	7	-83
90	0	62	-28	34	-56	6	-84
89	-1	61	-29	33	-57	5	-85
88	-2	60	-30	32	-58	4	-86
87	-3	59	-31	31	-59	3	-87
86	-4	58	-32	30	-60	2	-88
85	-5	57	-33	29	-61	1	-89
84	-6	56	-34	28	-62	0	-90
83	-7	55	-35	27	-63		

SECTION V
ADJUSTMENTS

5-1. INTRODUCTION

This section describes adjustments and checks used to return the instrument to its specifications after repairs have been made.

Normally, adjustments need to be made only if the board that the adjustment is on has been changed or repaired.

See paragraph 1-10, Recommended Test Equipment, in Chapter 1 for a list of equipment used to properly service the 4945A.
Table 5-1 gives a summary of the 4945A adjustments.

See Figure 5-1 for adjustmemt locations.

5-2. SAFETY CONSIDERATIONS

WARNING

ADJUSTMENTS ARE PERFORMED WITH POWER APPLIED TO THE INSTRUMENT, AND PROTECTIVE COVERS REMOVED. SUCH MAINTENANCE SHOULD BE PERFORMED ONLY BY SERVICE TRAINED PERSONNEL WHO ARE AWARE OF THE HAZARDS INVOLVED FOR EXAMPLE, FIRE AND ELECTRICAL SHOCK). WHERE MAINTENANCE CAN BE PERFORMED WITHOUT POWER APPLIED, THE POWER SHOULD BE REMOVED.

READ THE SAFETY SUMMARY AT THE FRONT OF THIS MANUAL BEFORE MAKING ANY ADJUSTMENTS.

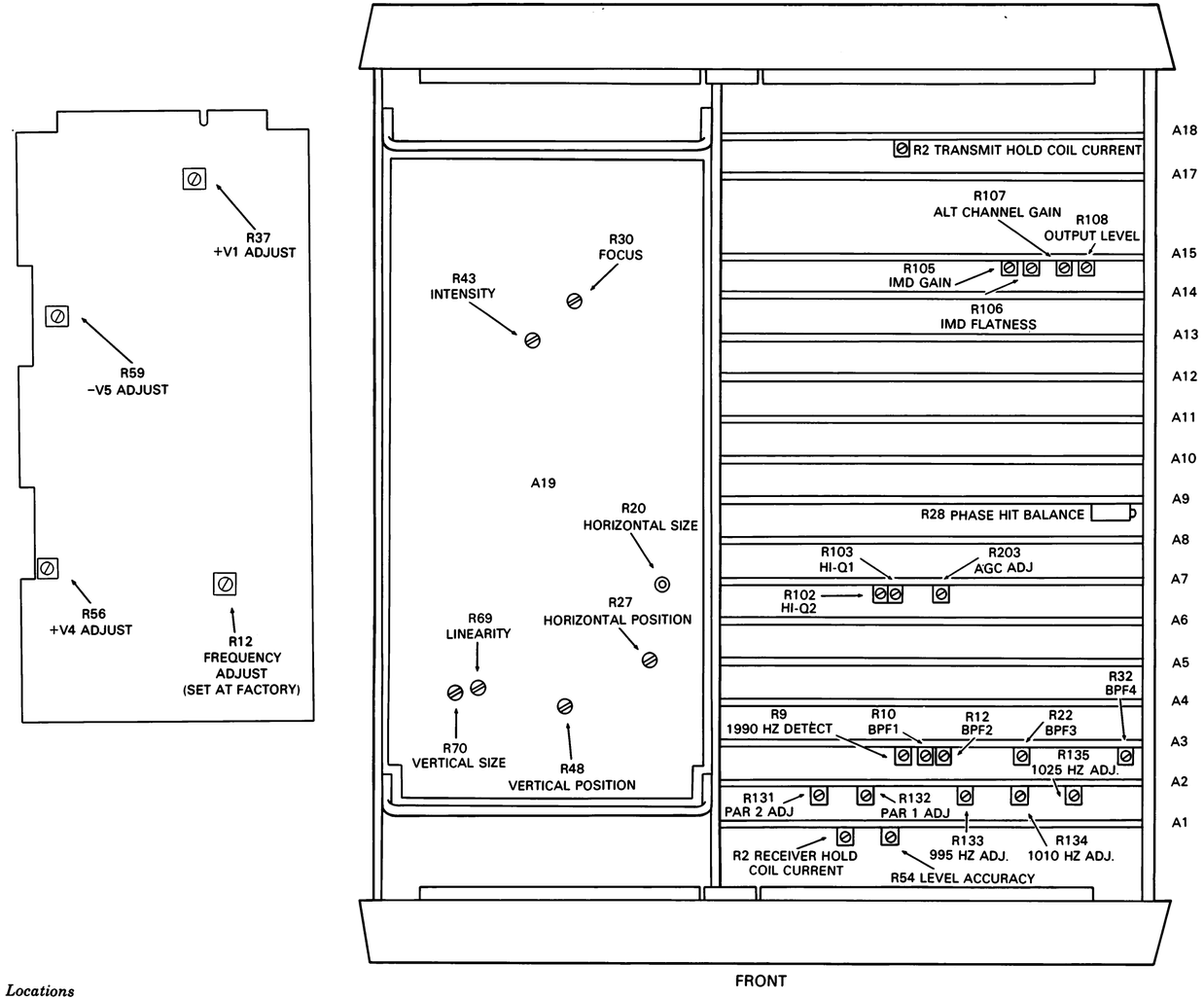

Figure 5-1. Adjustment Locations

Table 5-1. Adjustment Summary

Power Supply Adjustments

These adjustments are on both the 65908A and 65909A power supplies.

Adjustment	Component	Specifications A28	Specifications A29
Frequency	R12	142.86 kHz	142.86 kHz
V1	R37	+5V +-10 mV	+5V +-10 mV
V2		N/A	+18V
+V4	R56	+15V +-100 mV	+12V +-100 mV
-V5	R59	-15V +-100 mV	-12V +-100 mV

Transmitter Adjustments

Adjustment	Component	Specifications
NLD Tone Balance	A15R106	Same voltage for 860 Hz and 1380 Hz at U606 pin 16
NLD Gain (Level)	A15R105	Same voltage at U103 pin 12 and U606 pin 16
Alternate Channel (Level)	A15R107	4.85 V rms +-.5 mv
Hold Coil	A18R2	23 ma +-.1 ma
Transmitter Level Accuracy	A15R108	Set voltage between tip and ring to 4.238 V trms at 900 ohms

Receiver Adjustments

Adjustment	Component	Specifications
Level Accuracy	A1R54	Input and A1 TP1 same level (3.46 V trms at 600 ohms)
1010 Hz Notch Filter	A2R134 A2R135 A2R133	1010 Hz TP NOTCH2 1025 Hz TP NOTCH3 995 Hz TP NOTCH1
P/AR Filter	A2R132	adjust for 0 degrees phase A2R131 adjust for 0 degrees phase
US EDD Hi-Q Filters	A7R72	adjust for 0 degrees phase A7R11 adjust for 0 degrees phase
US EDD AGC	A7R35	TP3 reads 2.19 V rms +50 mV
Phase Hit Balance	A9R28	50% duty cycle at TP2
NLD 1990 Hz Detector	A3R9	1990 Hz +-1 Hz at U701 pin 5
NLD 520 Hz Bandpass Filter	A3R10 A3R12 A3R22 A3R32	90 degrees phase at 562 Hz 90 degrees phase at 492 Hz 90 degrees phase at 555 Hz 0 degrees phase at 480 Hz
Hold Coil	A1R2	24 ma +.1 ma
2-Wire Return Loss	A17R98	ERL reading of 0.0 dB
Real Time Clock Oscillator	A12C34	within 1.00001 seconds

CRT Adjustments

Adjustment	Component	Specifications
Focus	A19R14	best focus
Intensity	A19R52	500 c/m2, full raster, no faceplate
Horizontal Size	A19R9	16.5 cm +-.2 cm
Horizontal Position		centered
Vertical Size	A19R65	11 cm +- .2 cm
Vertical Position	A19R46	centered
Linearity	A19R64	Top and bottom characters are equal size
Yoke	Yoke Clamp	level display

5-3. POWER SUPPLY ADJUSTMENTS

Newer 4945A's have access holes in the power supply sheet metal that allow the adjustments to be made with just the top and bottom covers removed. On the ear lier instruments, these access holes are not present and the left side power supply (A29 and A21) must be swung out to access the adjustments.

If the left side supply must be swung out, refer to the power supply removal procedures in Section 6.

WARNING

LETHAL VOLTAGES ARE PRESENT ON THE A20 BOARD EVEN WHEN THE POWER SWITCH IS OFF.

LETHAL VOLTAGES ARE PRESENT ON THE POWER SUPPLY BOARDS AND ON THE A19 DISPLAY DRIVER BOARD WHEN AC POWER IS ON.

USE A NON-CONDUCTIVE ADJUSTMENT TOOL WHEN PERFORMING THE POWER SUPPLY ADJUSTMENTS.

5-4. Frequency Adjustment

The frequency adjustment is a factory adjustment and not normally done in the field. If you have questions about this adjustment, call the factory service engineer.

5-5. +V1 Adjustment (+5 volt)

The +5 volt supply must be adjusted before the other supplies are adjusted. There are two +5 voltages, one on A28 and one on A29.

Swing out the 65909 supply (A29 and A21, on left side) +5 NSY
Adjust

<u>+5 NSY Adjust</u>

1. Connect a DVM to A10 TP1 (+5V) and A10 TP2 (GND).

2. Adjust V1 on A29 (R37) for +5 volts +-.01 volts.

<u>+5 CLN Adjust</u>

1. Connect a DVM to A6 TP8 (+5V) and A6 TP7 (GND).

2. Use a long adjustment tool to reach the A28 V1 adjustment from the top of the 4945A. Adjust V1 on A28 (R37) for +5 volts +-.01 volts.

5-6. +V2 Adjustment (+18 Volt)

+V2 is +18 volts on the 65909 supply.

1. Swing out the 65909 supply (A29 and A21, on left side).
2. Connect a DVM to the red wire on A21 (+18V) and ground.
3. Check for +18 volts on A21. The voltage comes from the 65909 supply as unregulated +19 volts.

5-7. +V4 Adjustment

V4 is +12 volts on the 65909 supply and +15 volts on the 65908 supply.

Swing out the 65909 supply (A29 and A21, on left side).

+12 Volt Adjust

1. Do the +5 volt NSY adjustment first.
2. Connect a DVM to A19 J1 pin 3 (+12V) and ground.
3. Adjust V4 on A29 (R56) for +12 volts +-.1 volts.

+15 Volt Adjust

1. Do the +5 volt CLN adjustment first.
2. Connect a DVM to A6 TP5 (+15V) and ground.
3. Use a long adjustment tool to reach the A28 V4 adjustment from top of the 4945A (between the A14 and A15 board guides). Adjust V4 on A28 (R56) for +15 volts +-.1 volts.

5-8. -V5 Adjustment

V5 is -12 volts on the 65909 supply and -15 volts on the 65908 supply.

Swing out the 65909 supply (A29 and A21, on left side).

-12 Volt Adjust

1. Do the +5 volt NSY adjustment first.
2. Connect a DVM to A19 J1 pin 1 (-12V) and ground.
3. Adjust V5 on A29 (R59) for -12 volts +-.1 volts.

-15 Volt Adjust

1. Do the +5 volt CLN adjustment first.

2. Connect a DVM to A6 TP4 (-15V) and ground.

3. Use a long adjustment tool to reach the A28 V5 adjustment from the top of the 4945A (between the A9 and A10 board guides). Adjust V5 on A28 (R59) for -15 volts +-.1 volts.

5-9. Using the Power Supply Test Fixture

If you are using the power supply test fixture (04945-62608) to adjust the supply voltages, set the supply voltages to the specified levels and algebraically add the offset voltages listed below.

For V1 (+5V), set the voltage 25 mV high.

For V4 (+12V and +15V), set the voltage 100 mV high.

For V5 (-12V), set the voltage 50 mV high.

For V5 (-15V), set the voltage 100 mV low.

5-10. TRANSMITTER ADJUSTMENTS

5-11. Level Accuracy

Receiver: Level/Freq
Transmitter: 1004 Hz, 0.0 dBm, 600 ohms

Note: Use only 0.1% resistors or better. Refer to paragraph 4-3 for recommended resistor part numbers.

1. Connect the 600 ohm, 0.1% load.

2. Connect a DVM (HP 3455A) to the transmitter output.
   Adjust the XMT Level accuracy (A15R108) for 0.7746 Vrms +-.002 V.

3. Change the transmitter impedance to 900 ohms and verify the output level to be 0.9554 Vrms +-.004 V.

4. Change the transmitter impedance to 1200 ohms and verify the output level to be 1.098 Vrms +-.005 V.

5. Change the transmitter impedance to 135 ohms and verify the output level to be .3650 Vrms +-.002 V.

5-12. NLD Tone Balance and Level (Primary Method)

Receiver: Intermodulation Distortion
Transmitter: 0 dBm, 600 ohms

1. Connect the transmitter output to the receiver input.

2. For NLD balance, select and run diagnostic mode 52.

3. Adjust the NLD Balance (A15R106) so that the 4945A display reads 0.0 dB +-.1 dB. Failures and levels of .5 dB or greater are shown in inverse video.

4. Connect a true rms meter (HP 3403C) to the transmitter output. Adjust the NLD Gain (A15R105) until level is 0.775 V trms. Use the slow response time. **Note:** Other T-rms conversion meters can give different readings.

5-13. NLD Balance (Alternate Method)

Use this method for troubleshooting or performance verification.

Receiver: Intermodulation Distortion
Transmitter: 0 dBm, 600 ohms

1. Connect a spectrum analyzer to the transmitter output. Analyzer must have "Fast Fourier Transform" (FFT) with 0.02 Hz resolution.

   Following is the setup for the HP 3582A analyzer.

Marker -----	On	Freq. Span -----	25 Hz
Mode Set ---	Center	Input Mode -----	A
Coupling ---	ac	Chan A Sense ---	+10 dBV
Trig Level -	Free run, repetitive	Scale ----------	10 dB/div
		Passband shape -	flat top
Display ----	Amplitude A	Amplitude Ref --	Normal

2. Set the center frequency at either 860 Hz or 1380 Hz.

   Press REL and then SET REF after the marker is on the peak. Check the other peaks.

3. Adjust the NLD Balance (A15R106) so that all four IMD tones have identical levels (within .1 dBm offset).

   Note: The adjustment interface between the four peaks and it may require several reference sets to adjust.

5-14. Alternate Channel Level (Primary Method)

Run diagnostic self-check mode 18 (checking 1104 Hz at -20 dBm mixed with 1004 Hz).

1. Connect the DVM (HP 3455A with math function) to A15TP2.

2. Run mode 18 path 1 (1004 Hz single tone).

3. Store Y and press % Error. The DVM should read 0.00 V rms +- .005 V.

4. Run mode 18 path 7.

5. Adjust the Alternate Channel Level (A15R107) for .485% +-.005 %. (This reading is adjusted for the wideband characteristics of the HP 3455A)

5-15. Alternate Channel Level (Alternate Method)

Use this method for troubleshooting or performance verification.

1. Run mode 18 path 7.

2. Connect a spectrum analyzer (HP3582A) to A15TP2.

3. Look at the 1004 Hz and the 1104 Hz signals. The frequency difference should be 100 Hz and the 1104 Hz signal should be 20 dB less than the 1004 Hz signal.

5-16. Hold Coil Current For Transmitter and Receiver

Dial/Hold Setup: Transmit and receive hold on
Transmitter: 1004 Hz, 0 dBm
Receiver: Level/Freq

1. Connect a 12 Vdc +-.2V power supply, a 147 ohm (1%, 1/2W) resistor in series with the transmitter terminals (left) and then the receiver terminals (right). Connect the DVM across the resistor.

   Note: Do now reverse the TMT/RCV terminals during this test.

2. Check for 24 mA +- 0.1 mA (3.53 volt drop across resistor) on both the both the transmitter and receiver terminals. For the transmitter, adjust A18R2 For the receiver, adjust A1R2

3. Loop 1004 Hz from the transmitter to the receiver at -40 dBm and check for any distortion (none allowed). The amplitude of the sinewave is reduced, but it should remain sinusoidal while maintaining the 24 mA hold current.

   If the currents change, repair the holding current regulation circuits on A1 or A18 to achieve a good holding balance.

These holding circuit adjustments are designed for the specification and a response to a holding source from approximately 42.5 Vdc down to 8.5 Vdc with linear output current.

5-17. RECEIVER ADJUSTMENTS

5-18. Level Accuracy

Receiver: Level/Freq, 600 ohms
Transmitter: 1004 Hz, +13.0 dBm, 600 ohms

1. Put the A1 board on an extender. Loop the transmitter output to the receiver input. Alternately monitor the rceiver input level and the level at A1TP3 (SIGNAL) with a DVM. Adjust A1R54 (Input Level Adjust) for identical readings (approximately 3.460 V rms). This adjusts out any losses from A58 and A1.

5-19. 1010 Hz Notch Filter

Receiver: Level/Freq, 600 ohms
Transmitter: +13 dBm, 600 ohms

1. Put the A2 board on an extender board. Loop the transmitter ouput to receiver input.

2. Move the four-position shunt on A2 (JU2, 1010 Hz notch) to the left. Monitor the test points shown below at the frequencies listed. Set the appropriate adjustment for a null indication on the oscilloscope.

Test Point	Trmt Freq	Adjust
TP Notch 1	995 Hz	A2R133
TP Notch 2	1010 Hz	A2R134
TP Notch 3	1025 Hz	A2R135

3. Put the JU2 test shunt back to its original position.

5-20. P/AR Filter

Set up the 4945A as follows:

Receiver: P/AR, 0 dBm, 600 ohm

Note: Refer to the 4192A Impedance Analyzer manual (Paragraph 3-34) for reference information on the phase/gain measurement.

1. Set up the 4192A Impedance Analyzer as follows:

   0.5 volts output voltage
   Frequency - 1300 Hz
   Output Impedance - 50 ohms
   Averaging - ON (switch OFF and then back ON)
   Use the High Current Outputs
   Use 1 to 1 leads to the Channel A and B Reference inputs

2. Connect the 4192A High Current output to the 4945A receiver input. Overranging can be expected on the 4945A, but 0.5 volts input should not cause any internal gain.

3. Connect channels A and B of the 4192A to A2 TP1. Verify that the meter is calibrated and that the reading is less than or equal to 0.01 degrees phase.

4. Connect channel A to A2 TP1. Connect channel B to A2 TP2.

5. Adjust A2R132 (PAR1) for 0.0 degrees.

6. Move channel B to A2 TP3 and adjust A2R131 (PAR2) for 0.0 degrees. This adjustment eliminates any phase difference between PAR1 and PAR3.

7. Check the phase difference between A2 TP PAR and A2 TP NWGT with the 4192A. The phase should be 0.0 degrees +-.1 degree. If the phase is not correct, repeat the adjustment.

   Each filter will have approximately 0.1 dB gain and approximately 0.2 dB accross both.

The 4192A Analyzer has Phase versus Gain measurement capability with accuracy of <= 0.01 degrees which is required for the P/AR filter adjustment.

5-21. US EDD Hi-Q Filters 3 Hz modulation)

Receiver: Level/Freq, 600
Transmitter: 1004 Hz, 0 dBm, 600 ohms

1. Put the A7 board on an extender. On A7, move jumper JU3 (83 1/3 Hz CAL) to the left and move jumper JU1 (83 1/3 Hz BPF)to the left.

2. This adjustment uses an HP 3575A Phase/Gain meter. First connect channel A to the middle pin of JU3 and connect channel B to the left pin of JU3. The phase should be 0.0 degrees +-.1. This checks the meter calibration.

2. Connect Channel A of the phase gain meter to the middle pin of JU3. Connect Channel B to TP1.

3. Adjust A7R103 (HI-Q 1) for 0.0 degrees +-.1.

4. Move Channel A to TP2 and adjust A7R102 (HI-Q 2) for 0.0 degrees +-.1.

5. Move Channel B to the middle pin of JU3 to verify that the filter reads 0.0 degrees +-.1.

   Note: Go back and compensate each adjustment to get the 0.0 degree result.

6. Return the jumpers to their original positions.

5-22. US EDD AGC

Receiver: Envelope Delay Mode
Transmitter: 1804 Hz, 0 dBm, 600 ohms

1. Loop the transmitter output to the receiver input.

2. Monitor A7 TP2 with a DVM and adjust A7R203 (AGC Gain) for 2.19 Vrms +- 50 mV.

3. Change the transmit level to -13 dBm and verify that TP2 still reads 2.19 Vrms + 50 mV. Then go back to 0 dBm and again verify the TP2 level.

5-23. Phase Hit Balance

Run Mode 21, Path 1

1. Connect an oscilloscope to A9 TP2.

2. Coarse adjustment: Adjust A9R28 (Phase Hit Balance) for a 50% duty cycle square wave.

3. Fine adjustment: Adjust A9R28 until Mode 21 Path 1 displays a zero.

4. Mode 21 paths 2 and 3 should read 8 or 9.

5-24. NLD 1990 Hz Detector

1. Monitor the square wave at A3 TP1 with a frequency counter.

2. Adjust A3R9 (1990 Hz adjust) for 1990 Hz +- 1 Hz.

5-25. NLD 520 Hz Bandpass Filter

Receiver: Level/Freq, 600 ohms
Transmitter: 600 ohms

1. Loop the transmitter output to the receiver input.

2. Monitor the A3 test points listed below with an HP3575A Phase/Gain meter. Be sure to set the transmitter frequency and level. Adjust the appropriate adjustment as necessary.

Connect		Transmit			
Channel A	Channel B	Freq	Level	Adjust	For
TP 2	TP 3	562 Hz	-10 dBm	A3R10 (BPF1)	90o
TP 3	TP 4	492 Hz	-10 dBm	A3R12 (BPF2)	90o
TP 4	TP 5	555 Hz	-10 dBm	A3R22 (BPF3)	90o
TP 5	TP 6	480 Hz	0 dBm	A3R32 (BPF4)	0o

You can look at the filter shape by using an HP3585A Spectrum Analyzer. Use thesetup described below.

1. Set up the 3585A to view frequencys from 200 Hz to 800 Hz.

2. Connect the 4945A transmitter output to the high impedance input on the 3585A.

3. Connect the 3585A's tracking generator output to the 4945A receiver input.

4. Connect the signal probe to A3 TP1 and view the filter response curve on the 3585A. The ideal filter shape is shown below. The actual frequency points may +-2 Hz.

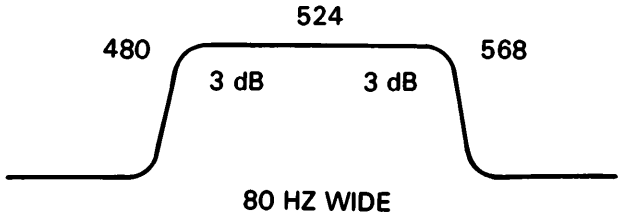

5-26. Two Wire Return Loss

Test Select: ERL, Two Wire, 900 ohm
Transmitter: 1000 Hz, -2.0 dB, 900 ohm
Receiver: 900 ohm

1. Put the A17 board on an extender.

2. Connect an HP3403C True rms voltmeter to A4TP5. Use A6TP7 for the ground connection.

   Note: Other T-RMS conversion meters can give different readings.

3. Adjust A17R98 for 0.758 V trms at A4TP5. The ERL reading on the HP4945A should be 0.0 dB to -0.1 dB.

5-27. Real Time Clock Oscillator

1. Set test switch S406 on A11 to the following position.

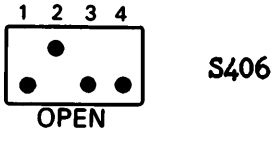

S406

2. Set up the frequency counter (HP5315) as follows:

   Channel A, period measurement
   Trigger - maximum sensitivity
   AC trigger
   Use 100 kHz filter
   Attenuation - X1

   The counter's 7-digit per second resolution feature is needed in this adjustment.

3. Connect the counter to A12 TP103-8, labelled 1 Hz.

4. The reading should be 1.0000000 seconds, +-.0000199 seconds Adjust. Adjust A12 if necessary.

5-28. DISPLAY ADJUSTMENTS

First see that the power supplies are within specifications. The values of +5NSY, +12V and -12V will affect the CRT adjustments. Adjust the supplies if necessary (See Power Supply Adjustments).

Magnetic fields from soldering irons, transformers, instruments and other such devices may cause display distortion. Removing these electromagnetic fields should eliminate unwanted distortions. If this is a new CRT/Yoke assembly, be sure to do the phosphor packing before continuing (See CRT Installation in Chapter 6).

The CRT adjustments should be made in the order given below.

1. Turn the instrument on, and select the TEST PATTERN softkey in the CALIBRATE/SELF-CHECK menu. Display the pattern that has the E characters in the inverse video field.

2. If necessary, adjust the HORIZ SIZE (A19 R20) and VERT SIZE (A19 R65) so the entire video display pattern is visible.

3. The displayed video border should be level and parallel with the display bezel. If not, perform the Yoke Adjustment below.

4. Adjust the LINEARITY (A69 R19) control so the top and bottom video softkey characters are the same size.

5. Adjust the VERT SIZE (A19 R65) and VERT POSITION (A19 R48) so the video border is just within the top and bottom edges of the display bezel. Also check to see that the vide softkeys are aligned with the front panel softkeys when viewing the display.

6. Adjust the HORZ SIZE (A19 R20) and HORZ POSITION (A19 R27) so the video border is just within the left and right edges of the display bezel.

7. Using a photometer, adjust the brightness as follows:

   A. Remove the display bezel by releasing the latches on the underside of the bezel.

   B. Carefully remove the glass contrast faceplate, and thoroughly clean both sides of the faceplate and the CRT face with a mild glass cleaner and a lint-free cloth.

   C. Replace the faceplate, coated side out, and snap the bezel back in place by first hooking the top latches then the botton latches.

D. Adjust the INTENSITY (A19 R43) for the desired intensity OR use a photometer and set the intensity for a luminance of 60 +/-2 Candela per square metre (17.5 +/-0.6 Foot-lambert).

Note: The photometer method should be done when there is more than two 4945A'S together in a system.

8. Adjust the FOCUS (A19 R30) so that the dots in the video are sharp and clear (minimum dot size).

5-29. Yoke Adjustment

WARNING

LETHAL VOLTAGES EXIST ON THE POWER SUPPLIES AND IN THE AREA AROUND THE CRT. USE EXTREME CAUTION WHEN SERVICING. ALL AJUSTMENTS SHOUD BE PERFORMED ONLY BY QUALIFIED PERSONNEL.

1. Set the 4945A power switch to "off" and remove the ac power cord.

2. Swing out the power supply on the left side of the instrument to access the CRT yoke.

3. Loosen the yoke clamp.

4. Connect the power cord and set the power switch to on.

5. Display the test pattern (from the Calibrate/Self Test menu).

6. Rotate the yoke until the display is level.

7. Make sure the yoke is positioned forward against the CRT bell and re-tighten the yoke clamp.

SECTION VI
REPLACEABLE PARTS

6-1. INTRODUCTION

This section contains information for ordering parts and assembly removal procedures. Table 6-1 lists reference designators and abbreviations used in the parts list and throughout the manual. Table 6-2 lists all replaceable parts in reference designator order. Table 6-3 gives the names and addresses that correspond to the manufacturer's code numbers. The figures in this chapter are used to identify the mechanical and hardware part you need. Component locators in Section 8 can be used to identify a part on a PC board. After identifying the part in one of the figures, look up the reference designator in the parts list for ordering information.

6-2. EXCHANGE ASSEMBLIES

The 65908A (A28) and the 65909A (A29) power supplies are on the Blue Stripe Exchange program. The exchange numbers are:

65908-69020 for the 65908A supply

65909-69020 for the 65909A supply

6-3. ABBREVIATIONS

Table 6-1 lists the reference designators and abbreviations used in the parts list, the schematics and throughout the manual. The abbreviations in the parts list are always capital letters. In other parts of the manual abbreviations may be used with both lower and upper case letters.

6-4. ORDERING INFORMATION

To order a part on the material lists, quote the Hewlett-Packard part number, indicate the quantity desired, and address the order to the nearest Hewlett-Packard Sales/ Service Office.

To order a part not on the material lists, include the instrument model number, instrument serial number, a description of the part (including its function), and the number of parts required. Address the order to the nearest Hewlett-Packard Sales/ Service Office.

6-5. DIRECT MAIL ORDER SYSTEM

Within the USA, Hewlett-Packard can supply parts through a direct mail order system. Advantages of using this system are:

a. Direct ordering and shipment from the Hewlett-Packard Parts Center in Mountain View, California.
b. No maximum or minimum on any mail order (there is a minimum order amount for parts ordered through a local Hewlett-Packard office when the orders require billing and invoicing).

c. Prepaid transportation (there is a small handling charge for each order).

d. No invoices.

To provide these advantages, a check or money order must accompany each order. Payment must include handling charge and state tax. HewlettPackard is licensed to do business in all 50 states and must collect appropriate state taxes.

Mail order forms and specific ordering information is available through your local Hewlett-Packard office. Addresses and phone numbers are listed at the back of this manual.

Table 6-1. Reference Designators and Abbreviations

REFERENCE DESIGNATORS

A	= assembly	F	= fuse	Q	= transistor; SCR; triode thyristor	U	= integrated circuit; microcircuit
B	= fan; motor	FL	= filter	R	= resistor	V	= electron tube; glow lamp
BT	= battery	H	= hardware	RT	= thermistor	VR	= voltage regulator; breakdown diode
C	= capacitor	J	= electrical connector (stationary portion); jack	S	= switch; jumper	W	= cable
CR	= diode; diode thyristor; varactor	L	= coil; inductor	T	= transformer	X	= socket
DL	= delay line	MP	= misc. mechanical part	TB	= terminal board	Y	= crystal unit (piezo-electric or quartz)
DS	= annunciator; lamp; LED	P	= electrical connector (movable portion); plug	TP	= test point		
E	= misc. electrical part						

ABBREVIATIONS

A	= amperes	DWL	= dowel	MFR	= manufacturer	RND	= round
A/D	= analog-to-digital	ECL	= emitter coupled logic	MICPROC	= microprocessor	ROM	= read-only memory
AC	= alternating current	ELAS	= elastomeric	MINTR	= miniature	RPG	= rotary pulse generator
ADJ	= adjustment)	EXT	= external	MISC	= miscellaneous	RX	= receiver
AL	= aluminum	F	= farads; metal film (resistor)	MLD	= molded	S	= Schottky-clamped; seconds (time)
AMPL	= amplifier			MM	= millimeter		
ANLG	= analog	FC	= carbon film/ composition	MO	= metal oxide	SCR	= screw; silicon controlled rectifier
ANSI	= American National Standards Institute			MTG	= mounting		
		FD	= feed	MTLC	= metallic	SEC	= second (time); secondary
ASSY	= assembly	FEM	= female	MUX	= multiplexer	SEG	= segment
ASTIG	= astigmatism	FF	= flip-flop	MW	= milliwatt	SEL	= selector
ASYNCHRO	= asynchronous	FL	= flat	N	= nano (10-9)	SGL	= single
ATTEN	= attenuator	FM	= foam;from	NC	= no connection	SHF	= shift
AWG	= American wire gauge	FR	= front	NMOS	= n-channel metal-oxide-semiconductor	SI	= silicon
BAL	= balance	FT	= gain bandwidth product			SIP	= single in-line package
BCD	= binary-coded decimal			NPN	= negative-positive-negative	SKT	= skirt
BD	= board	FW	= full wave			SL	= slide
BFR	= buffer	FXD	= fixed	NPRN	= neoprene	SLDR	= solder
BIN	= binary	GEN	= generator	NRFR	= not recommended for field replacement	SLT	= slot(ted)
BRDG	= bridge	GND	= grounded)			SOLD	= solenoid
BSHG	= bushing	GP	= general purpose	NSR	= not separately replaceable	SPCL	= special
BW	= bandwidth	GRAT	= graticule			SQ	= square
C	= ceramic; cermet (resistor)	GRV	= groove	NUM	= numeric	SREG	= shift register
		H	= henries; high	OBD	= order by description	SRQ	= service request
CAL	= calibrate; calibration	HD	= hardware	OCTL	= octal	STAT	= static
CC	= carbon composition	HDND	= hardened	OD	= outside diameter	STD	= standard
CCW	= counterclockwise	HG	= mercury	OP AMP	= operational amplifier	SYNCHRO	= synchronous
CER	= ceramic	HGT	= height	OSC	= oscillator	TA	= tantalum
CFM	= cubic feet/minute	HLCL	= helical	P	= plastic	TBAX	= tubeaxial
CH	= choke	HORIZ	= horizontal	P/O	= part of	TC	= temperature coefficient
CHAM	= chamfered	HP	= Hewlett-Packard	PC	= printed circuit	TD	= time delay
CHAN	= channel	HP-IB	= Hewlett-Packard Interface Bus	PCB	= printed circuit board	THD	= threaded)
CHAR	= character			PD	= power dissipation	THK	= thick
CM	= centimeter	HR	= hour(s)	PF	= picofards	THRU	= through
CMOS	= complementary metal-oxide-semiconductor	HV	= high voltage	PI	= plug in	TP	= test point
		HZ	= Hertz	PL	= plate(d)	TPG	= tapping
CMR	= common mode rejection	I/O	= input/output	PLA	= programmable logic array	TPL	= triple
CNDCT	= conductor	IC	= integrated circuit			TRANS	= transformer
CNTR	= counter	ID	= inside diameter	PLST	= plastic	TRIG	= trigger(ed)
CON	= connector	IN	= inch	PNP	= positive-negative-positive	TRMR	= trimmer
CONT	= contact	INCL	= include(s)			TRN	= turn(s)
CRT	= cathode-ray tube	INCAND	= incandescent	POLYE	= polyester	TTL	= transistor-transistor
CW	= clockwise	INP	= input	POS	= positive; position	TX	= transmitter
D	= diameter	INTEN	= intensity	POT	= potentiometer	U	= micro (10-6)
D/A	= digital-to-analog	INTL	= internal	POZI	= pozidrive	UL	= Underwriters Laboratory
DAC	= digital-to-analog converter	INV	= inverter	PP	= peak-to-peak	UNREG	= unregulated
		JFET	= junction field-effect transistor	PPM	= parts per million	VA	= voltampere
DARL	= darlington			PRCN	= precision	VAC	= volt, ac
DAT	= data	JKT	= jacket	PREAMP	= preamplifier	VAR	= variable
DBL	= double	K	= kilo (10³)	PRGMBL	= programmable	VCO	= voltage-controlled oscillator
DBM	= decibel referenced to 1 mW	L	= low	PRL	= parallel		
		LB	= pound	PROG	= programmable	VDC	= volt, dc
DC	= direct current	LCH	= latch	PSTN	= position	VERT	= vertical
DCDR	= decoder	LCL	= local	PT	= point	VF	= voltage, filtered
DEG	= degree	LED	= light-emitting diode	PW	= potted wirewound	VS	= versus
DEMUX	= demultiplexer	LG	= long	PWR	= power	W	= watts
DET	= detector	LI	= lithium	R-S	= reset-set	W/	= with
DIA	= diameter	LK	= lock	RAM	= random-access memory	W/O	= without
DIP	= dual in-line package	LKWR	= lockwasher	RECT	= rectifier	WW	= wirewound
DIV	= division	LS	= low power Schottky	RET	= retainer	XSTR	= transistor
DMA	= direct memory access	LV	= low voltage	RF	= radio frequency	ZNR	= zener
DPDT	= double-pole, double-throw	M	= mega (10⁶); megohms; meter (distance)	RGLTR	= regulator	°C	= degree Celsius (Centigrade)
				RGTR	= register		
DRC	= DAC refresh controller	MACH	= machine	RK	= rack	°F	= degree Fahrenheit
DRVR	= driver	MAX	= maximum	RMS	= root-mean-square	°K	= degree Kelvin

6-6. TORQUES FOR HARDWARE

Some of the 4945A screws and nuts must be tightened to specific torque values to prevent damage to the fastener or the chassis. Here is a list of the items that require a specific torques. Also refer to the torque notes on the part locator drawings.

The 10-32 screws holding the handle and the side rails should be tightened to 35 inch pounds.

The following items should be tightened to 21 inch pounds:

- o Screws holding the top and bottom covers and their feet.
- o The six screws that hold the front panel to the chassis.
- o The nuts that hold the 310 connectors to the front panel.
- o The screws that hold the card cage supports to the wire frame.
- o Any screw that uses the wire frame nut clamps. These are on wire frame used to hold several PC boards onto the frame.

The following items should be tightened to 11 inch pounds.

- o All the screws on the rear panel; I/O cover, rear feet, A59 and the screws that hold A18 onto the rear panel.
- o The front panel binding post connectors and the nuts that hold A58.
- o Any screw that uses a sheetmetal nut.

WARNING

REMOVE ANY AC POWER FROM THE 4945A BEFORE REMOVING ANY ASSEMBLY OR PART.

CAUTION

HANDLE THE FLAT, FLEXIBLE RIBBON CABLES CAREFULLY. THE CONNECTORS PROVIDE A LOCK FOR THE CABLES AND THE CABLE ENDS CAN BE DAMAGED WHEN THEY ARE DISCONNECTED.

6-7. POWER SUPPLY REMOVAL

Here are the procedures to remove any one of the power supply assemblies and to swing the assemblies out for adjustment.

65908-69020 Supply (-15V) Removal

The 65908A Supply is on the bottom of the 4945A. To remove this assembly use the following procedure.

1. Place the 4945A on its rear feet and remove the bottom cover. Refer to Figure 6-1.

2. Cut the two cable ties that hold the power switch cable to the 65908A sheet metal (See Figure 6-1).

3. Remove the four screws marked "A" in Figure 6-1 that hold the 65908A assembly to the chassis.

4. Carefully disconnect the supply from the A20 assembly. Disconnect the cable that plugs into A20 and remove the 65908A assembly.

5. When reinstalling, remember to plug in the cable to A20 and install new cable ties for the power switch cable.

A21 Removal

The A21 board is on the bottom of the 4945A. To remove this assembly use the following procedure.

1. Place the 4945A on its rear feet and remove the bottom cover. Refer to Figure 6-1.

2. Remove the flat ribbon flex-cables (J1 and J2) from the A21 board.

3. Remove the five screws (B) shown in Figure 6-1 to swing out the 65908A and the A21 board.

4. Disconnect the wires from A21 (See Figure 6-2);

   - o Disconnect the four wire cable to A20.
   - o Disconnect the two wire cable to the 65908A.
   - o Unsolder the two sense lines from A20 (white/brown, white/blue).
   - o Unsolder the two sense lines (orange and black wires).
   - o Unsolder the red (+18V) wire).

5. Remove the last screw (C) holding A21 to the chassis and disconnect the board from the 65908A supply.

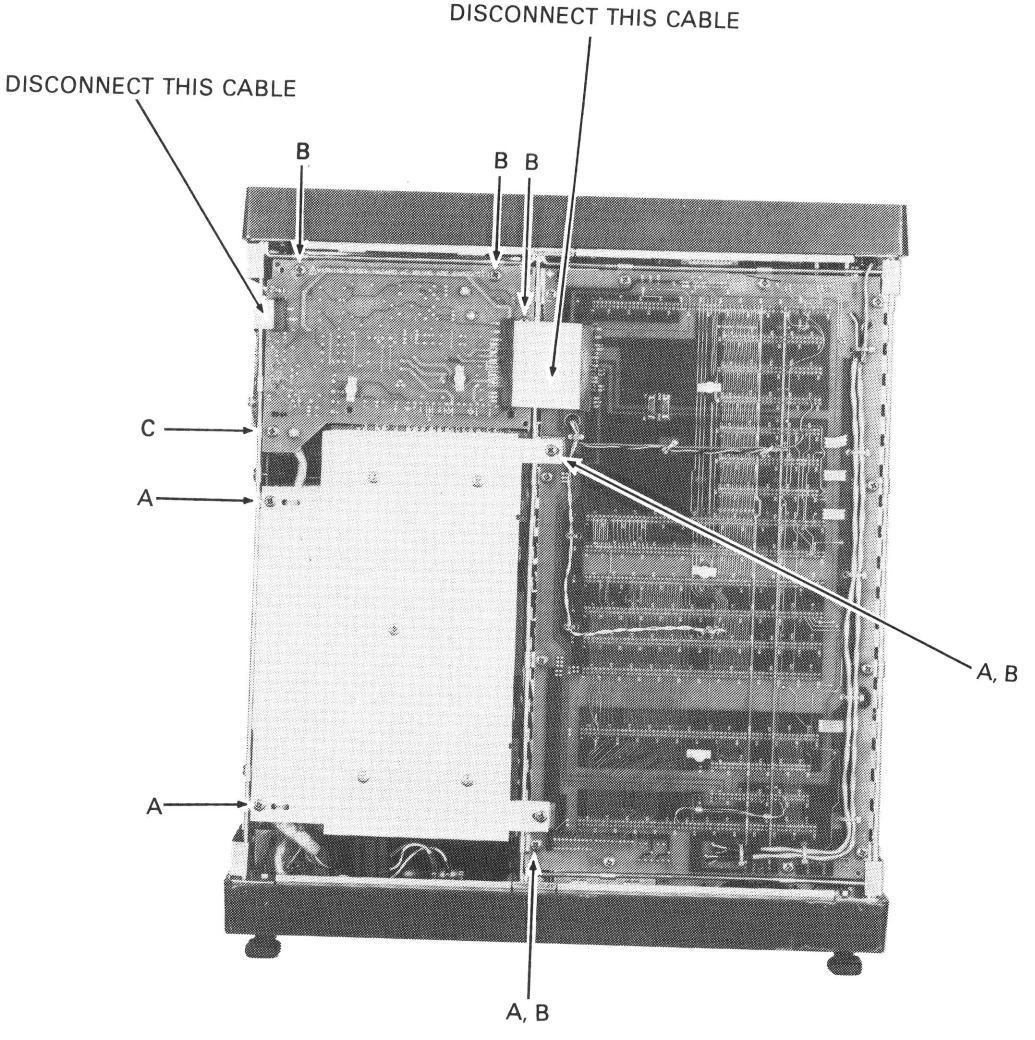

REMOVE SCREWS MARKED B TO SWING OUT 65908A AND A21.
REMOVE SCREWS MARKED C AND B TO REMOVE A21.
REMOVE SCREWS MARKED A TO REMOVE 65908A.

Figure 6-1. 65908A and A21 Access Screws

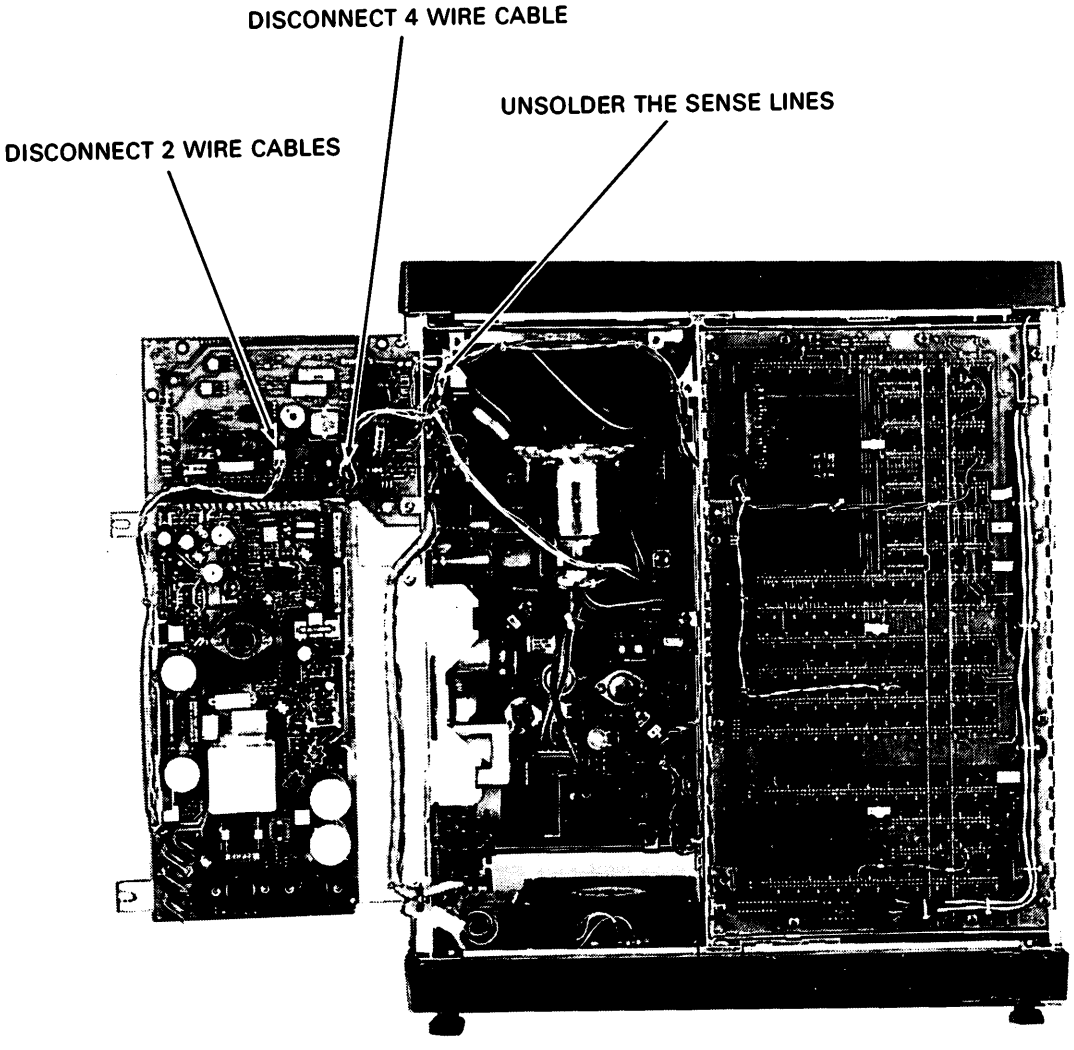

Figure 6-2. A21 Cables

65909-69020 Supply (+12V) Removal

The 65909A Supply is on the left side of the 4945A. To remove this assembly use the following procedure.

1. Set the 4945A on its rear feet and remove the top and bottom covers.

2. Remove the carry handle and the side rail.

3. Remove the four screws marked "A" in Figure 6-3 that hold the 65909A assembly to the chassis.

4. Carefully disconnect the supply from the A20 board and remove the 65909A supply.

A20 Removal

The A20 board is on the left side of the 4945A. To remove this assembly use the following procedure.

1. Set the 4945A on its rear feet and remove the top and bottom covers.

2. Remove the carry handle and the side rail.

3. Switch the power switch to the ON position. Carefully pry the line switch extension shaft from the line switch. Use a screwdriver and pry only on the extension shaft to avoid damaging the line switch mechanism.

4. Remove the cable that connects to the A20 board from A21 (Figure 6-3).

5. Remove the four screws (B) shown in Figure 6-3 and swing out the 65909A and the A20 board.

6. Disconnect the wires from A20 (See Figure 6-4);

   - o Unplug the four wire cable from A21.
   - o Unplug the four wire cable to A19.
   - o Unplug the two wire fan cable.
   - o Unsolder the two sense lines.
   - o Unsolder the power cable from the power switch.

7. Remove the remaining screw (C) that holds the A20 board to the chassis. Remove the A20 board from the 65909A.

8. When reinstalling, check the mechanical operation of the power switch on A20.

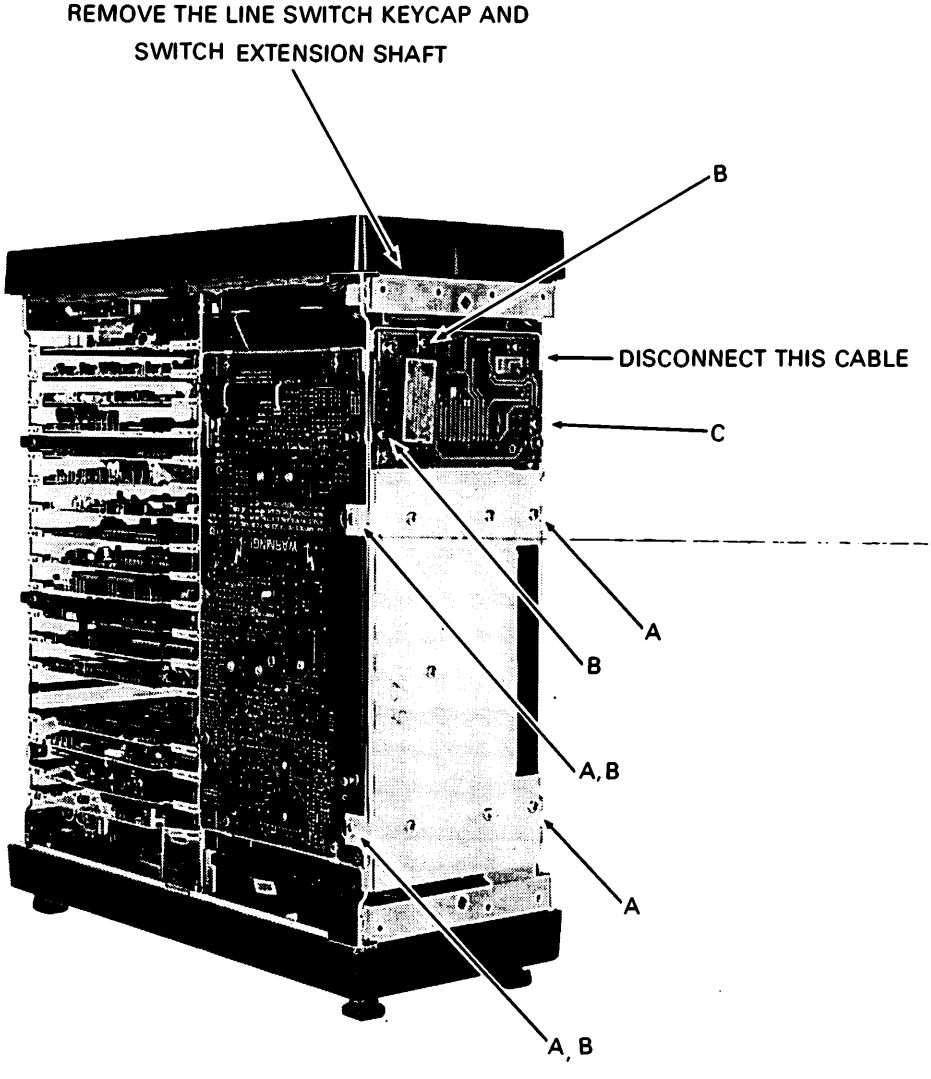

REMOVE SCREWS MARKED B TO SWING OUT 65909A AND A20.
REMOVE SCREWS MARKED C AND B TO REMOVE A20.
REMOVE SCREWS MARKED A TO REMOVE 65909A.

Figure 6-3. 65909A and A20 Access Screws

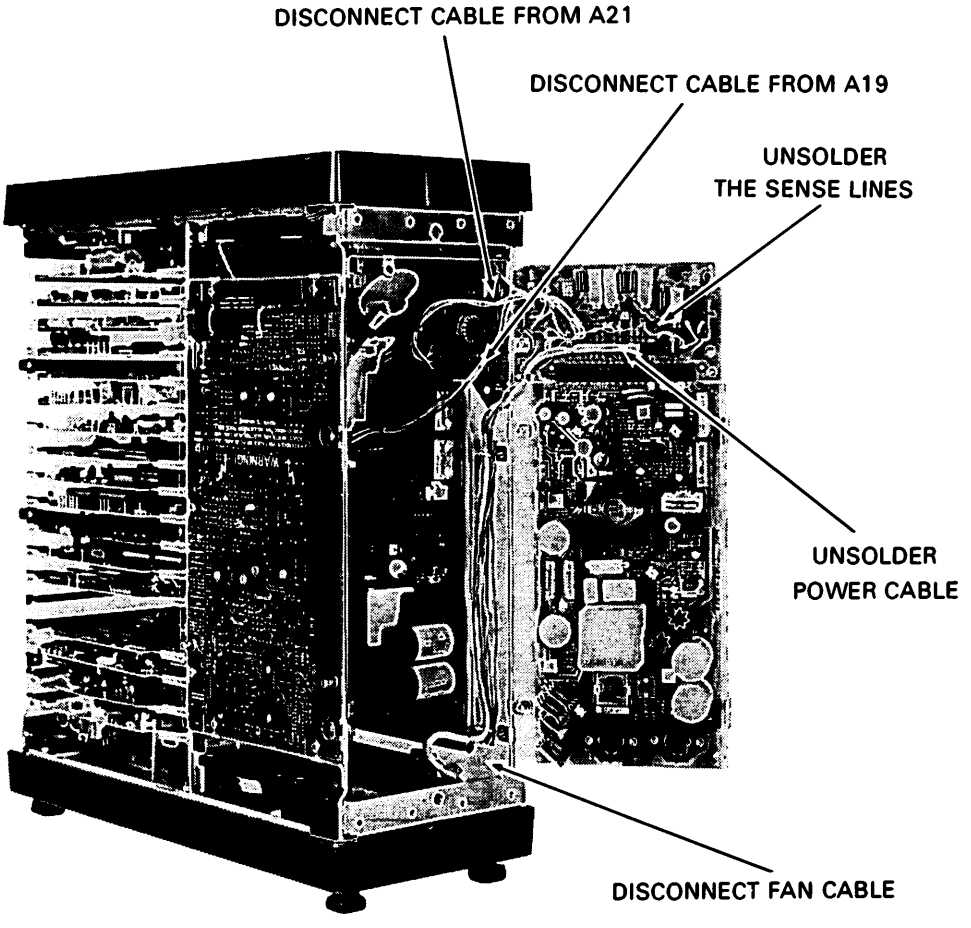

Figure 6-4. A20 Cables

6-8. CRT REMOVAL

WARNING

HAZARDOUS VOLTAGES EXIST ON THE PC BOARDS SURROUNDING THE CRT. TO AVOID ELECTRICAL SHOCK, USE THE FOLLOWING PROCEDURE. WEAR SAFETY GLASSES WHEN HANDLING THE CRT.

THE CRT MAY CHARGE ITSELF WHILE DISCONNECTED.

1. Set the power switch to OFF and disconnect the power cord.

2. Place the instrument face down on a table and remove the top and bottom covers.

3. Remove the five screws (A) shown in Figure 6-1 and remove the ribbon cable from the A21 board so that the 65908A power supply and the A21 board can be swung out of the way (See Figure 6-2).

4. Disconnect the CRT connector from the rear of the CRT and disconnect the yoke cable from the A19 board.

5. Discharge the CRT.

   a. Connect a jumper wire between the metal strap on the CRT and metal shaft of an insulated screwdriver.

   b. Slip the screwdriver tip under the rubber cap of the anode lead and touch the screwdriver tip to the anode connection to discharge the CRT.

6. Remove the anode lead from the CRT.

7. Remove the four screws that hold the CRT to the front panel.

8. Remove the CRT/Yoke assembly through the bottom of the instrument.

6-9. CRT INSTALLATION

If a new CRT/Yoke assembly is to be installed, the CRT phosphor must first be "packed". This must be done before final adjustments are made. Use this procedure to pack the phosphor on a new CRT.

1. With the top cover removed and the power off, turn the display self-test switch (A19 SW1) to the TEST position.

2. Turn the instrument on and see that the raster displayed is level and parallel to the display bezel. If not, adjust the yoke as described in CRT Adjustments, Section 5.

3. Adjust the HORIZONTAL SIZE (A19 R20) and VERTICAL SIZE (A19 R70) so that the entire CRT face is filled with the raster.

4. Adjust the INTENSITY (A19 R43) for maximum brightness.

5. Leave instrument running this way for 15 hours minimum.

6. Return display self-test switch (A19 SW1) to RUN position.

7. Make final diplay adjustments described in CRT Adjustments, Section 5.

6-10. FRONT PANEL REMOVAL

Six screws hold the front panel to the instrument frame. Four of the screws are accessed through the card cage and the other two are accessed through the CRT cage area (See Figure 6-5).

1. Switch the instrument power switch to off and remove the instrument power cord.

2. Place the instrument face down on a table and remove the top, bottom and and right side covers.

3. Some of the pc boards in the card cage must be removed so you can get a screwdriver in to remove four of the screws.

4. Disconnect the cables between the motherboard and the front panel.

5. Remove the four screws (A) shown in Figure 6-3 and swing out the 65909 power supply and the A20 board to access the other two screws. 6. Now, before you get in a hurry, you have to remove the CRT.

7. Lift the instrument from the front panel.

8. When re-assembling, be sure to connect all the ground straps and the front panel cable.

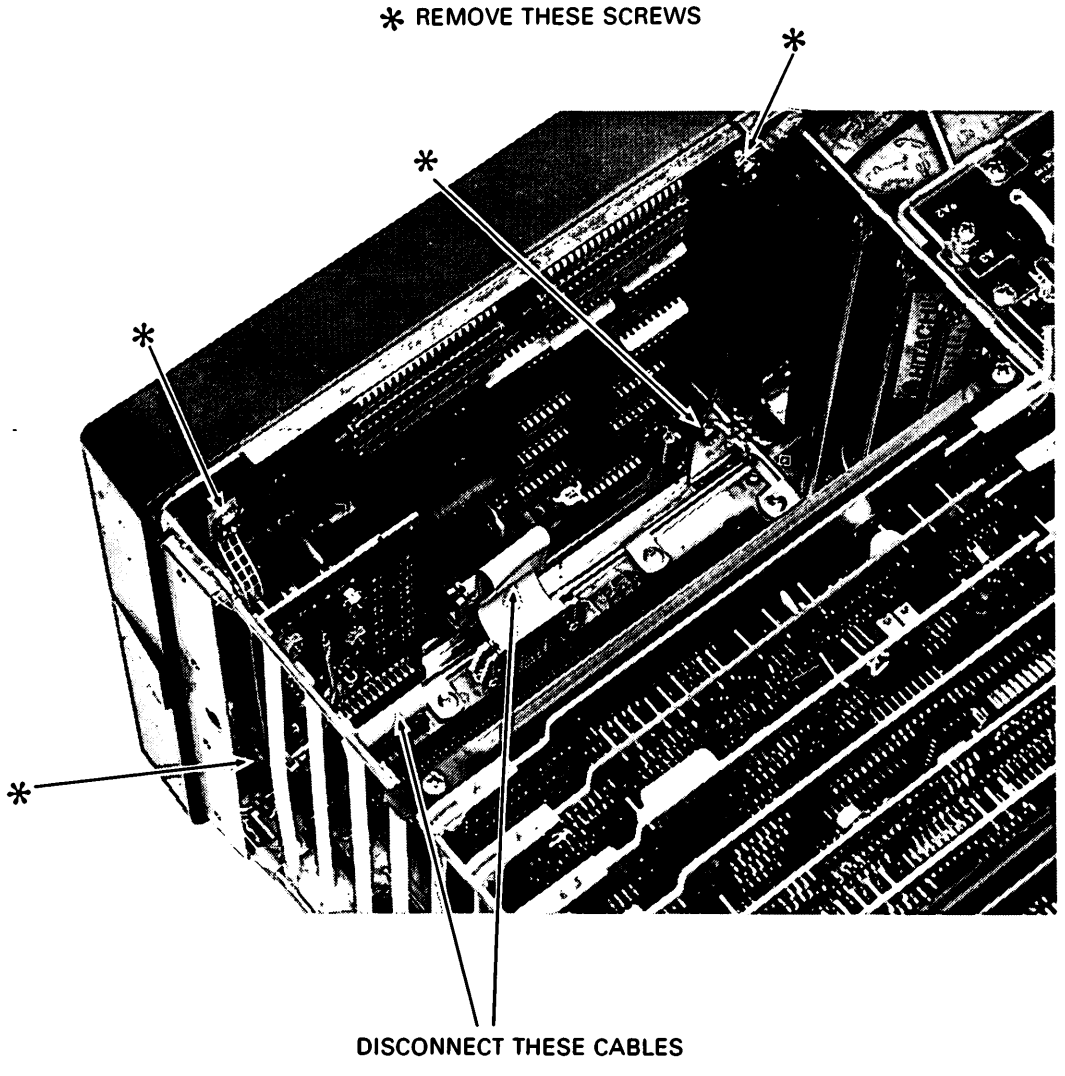

Figure 6-5. Front Panel Screws Accessed From Cardcage

6-11. FRONT PANEL 310 CONNECTOR PRECAUTION

When replacing a 310 connector on the front panel, mount the connector to the front panel first to ensure the proper front panel fit, then install the A58 board and solder the connector. See Figure 6-6.

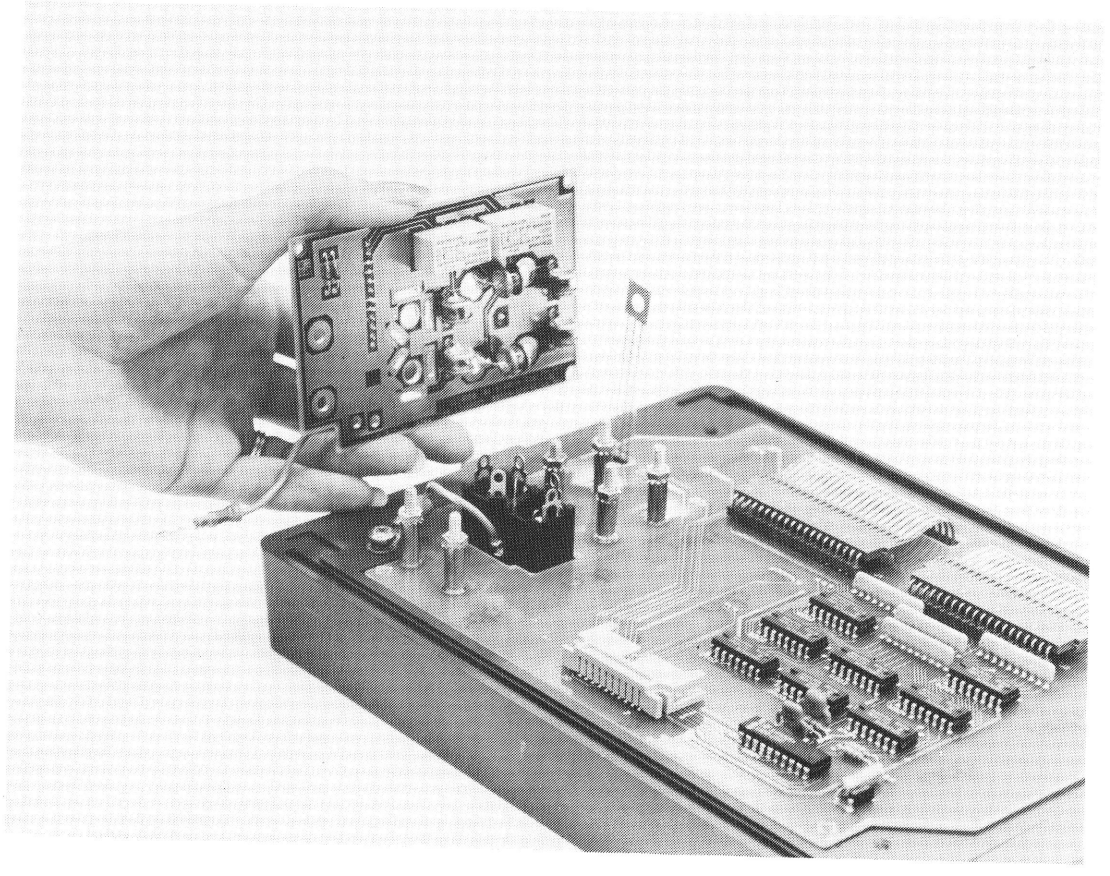

Figure 6-6. 310 Connector Installation

6-12. REAR PANEL COMPONENT ACCESS

The fan and loudspeaker are mounted to the rear panel, which is held to the instrument frame by six screws. A18 is also held to the I/O housing by three screws.

Use this procedure to remove the rear panel and access the rear panel components.

1. Switch the instrument power switch off and remove the instrument power cord.

2. Remove the bottom cover.

3. Place the instrument on a table with the rear panel facing you, with the rear plastic bezel hanging over the edge of the table.

4. If replacing the fan, remove the fan air filter screen held by four thumb nuts and washers.

5. Remove any interfaces or the I/O cover plate and the A59 rear panel connect assembly.

6. Remove the three, 6-32 screws which hold A18 to the I/O housing. Remove the four rear feet and two screws at the upper and lower center of the rear panel.

7. Gently tip out the top of the panel and frame, pivoting on the bottom.

8. Carefully disconnect the speaker wires from the motherboard (A22).

9. Pull the rear panel and frame as far away from the instrument as the cables will allow.

10. Separate the plastic bezel from the sheetmetal panel.

The rear panel components are now accessible for replacement.

When replacing the speaker, be careful not to damage the paper cone in any way.

When replacing the fan, be sure to have the safety screen "sandwitched" between the fan housing and the metal panel. Be sure to thoroughly clean the fan filter screen.

6-13. REPLACEABLE PARTS LIST

Table 6-2 is replaceable parts alphanumerically by reference designator and organized as follows:

a. Electrical assemblies.

b. Chassis mounted parts.

c. Electrical assemblies and their components.

Information for each part consists of:

a. Reference designator.

b. Hewlett-Packard part number.

c. Part number check digit (CD).

d. Total quantity (QTY) in instrument (or assembly). The total quantity is given only once at the first appearance of the part number in the list.

e. Description of part.

f. Typical manufacturer of part in a five-digit code.

g. Manufacturer's part number.

Table 6-2. 4945A Replaceable Parts (Cont'd)

Reference Designation	HP Part Number	C D	Qty	Description	Mfr Code	Mfr Part Number
A1	04945-60001	3	1	RECEIVER INPUT	28480	04945-60001
A1C1	0160-5675	5	1	CAPACITOR-FXD .47UF +-20% 50VDC	28480	0160-5675
A1C2	0160-5332	1	3	CAPACITOR-FXD .1UF +-20% 50VDC CER	28480	0160-5332
A1C3	0160-5332	1		CAPACITOR-FXD .1UF +-20% 50VDC CER	28480	0160-5332
A1C4	0180-0373	2	1	CAPACITOR-FXD .68UF+-10% 35VDC TA	56289	150D684X9035A2
A1C5	0160-5332	1		CAPACITOR-FXD .1UF +-20% 50VDC CER	28480	0160-5332
A1C6	0180-3264	6	1	CAPACITOR-FXD 05UF+75-10% 150VDC AL NPOL	28480	0180-3264
A1C7	0160-0128	3	18	CAPACITOR-FXD 2.2UF +-20% 50VDC CER	28480	0160-0128
A1C8	0160-0128	3		CAPACITOR-FXD 2.2UF +-20% 50VDC CER	28480	0160-0128
A1C9	0180-2210	0	4	CAPACITOR-FXD 2UF+50-10% 150VDC AL	56289	30D205F150BB2
A1C10	0180-2210	0		CAPACITOR-FXD 2UF+50-10% 150VDC AL	56289	30D205F150BB2
A1C11	0180-2210	0		CAPACITOR-FXD 2UF+50-10% 150VDC AL	56289	30D205F150BB2
A1C12	0160-0128	3		CAPACITOR-FXD 2.2UF +-20% 50VDC CER	28480	0160-0128
A1C13	0160-0128	3		CAPACITOR-FXD 2.2UF +-20% 50VDC CER	28480	0160-0128
A1C14	0160-5298	8	8	CAPACITOR-FXD .01UF +-20% 100VDC CER	28480	0160-5298
A1C15	0160-0128	3		CAPACITOR-FXD 2.2UF +-20% 50VDC CER	28480	0160-0128
A1C16	0160-0128	3		CAPACITOR-FXD 2.2UF +-20% 50VDC CER	28480	0160-0128
A1C17	0160-2265	3	1	CAPACITOR-FXD 22PF +-5% 500VDC CER 0+-30	28480	0160-2265
A1C18	0160-5298	8		CAPACITOR-FXD .01UF +-20% 100VDC CER	28480	0160-5298
A1C19	0160-0128	3		CAPACITOR-FXD 2.2UF +-20% 50VDC CER	28480	0160-0128
A1C20	0160-0128	3		CAPACITOR-FXD 2.2UF +-20% 50VDC CER	28480	0160-0128
A1C21	0160-0128	3		CAPACITOR-FXD 2.2UF +-20% 50VDC CER	28480	0160-0128
A1C22	0160-5298	8		CAPACITOR-FXD .01UF +-20% 100VDC CER	28480	0160-5298
A1C23	0160-0128	3		CAPACITOR-FXD 2.2UF +-20% 50VDC CER	28480	0160-0128
A1C24	0160-0128	3		CAPACITOR-FXD 2.2UF +-20% 50VDC CER	28480	0160-0128
A1C25	0180-2210	0		CAPACITOR-FXD 2UF+50-10% 150VDC AL	56289	30D205F150BB2
A1C26	0160-3904	9	2	CAPACITOR-FXD 10UF +-10% 200VDC POLYC	28480	0160-3904
A1C27	0160-3904	9		CAPACITOR-FXD 10UF +-10% 200VDC POLYC	28480	0160-3904
A1C28	0160-0168	1	1	CAPACITOR-FXD .1UF +-10% 200VDC POLYE	28480	0160-0168
A1C29	0160-4808	4	1	CAPACITOR-FXD 470PF +-5% 100VDC CER	28480	0160-4808
A1C30	0160-5298	8		CAPACITOR-FXD .01UF +-20% 100VDC CER	28480	0160-5298
A1C31	0160-0128	3		CAPACITOR-FXD 2.2UF +-20% 50VDC CER	28480	0160-0128
A1C32	0160-0128	3		CAPACITOR-FXD 2.2UF +-20% 50VDC CER	28480	0160-0128
A1C33	0160-0128	3		CAPACITOR-FXD 2.2UF +-20% 50VDC CER	28480	0160-0128
A1C34	0180-0553	0	1	CAPACITOR-FXD 22UF+-20% 25VDC TA	28480	0180-0553
A1C35	0160-5298	8		CAPACITOR-FXD .01UF +-20% 100VDC CER	28480	0160-5298
A1C36	0160-0128	3		CAPACITOR-FXD 2.2UF +-20% 50VDC CER	28480	0160-0128
A1C37	0160-0128	3		CAPACITOR-FXD 2.2UF +-20% 50VDC CER	28480	0160-0128
A1C38	0160-0128	3		CAPACITOR-FXD 2.2UF +-20% 50VDC CER	28480	0160-0128
A1C39	0160-0128	3		CAPACITOR-FXD 2.2UF +-20% 50VDC CER	28480	0160-0128
A1C40	0160-5298	8		CAPACITOR-FXD .01UF +-20% 100VDC CER	28480	0160-5298
A1C41	0180-1746	5	3	CAPACITOR-FXD 15UF+-10% 20VDC TA	56289	150D156X9020B2
A1C42	0180-1746	5		CAPACITOR-FXD 15UF+-10% 20VDC TA	56289	150D156X9020B2
A1C43	0160-5298	8		CAPACITOR-FXD .01UF +-20% 100VDC CER	28480	0160-5298
A1C44	0180-1746	5		CAPACITOR-FXD 15UF+-10% 20VDC TA	56289	150D156X9020B2
A1C45	0160-5298	8		CAPACITOR-FXD .01UF +-20% 100VDC CER	28480	0160-5298
A1CR1	1901-0040	1	12	DIODE-SWITCHING 30V 50MA 2NS DO-35	28480	1901-0040
A1CR2	1901-0040	1		DIODE-SWITCHING 30V 50MA 2NS DO-35	28480	1901-0040
A1CR3	1901-0040	1		DIODE-SWITCHING 30V 50MA 2NS DO-35	28480	1901-0040
A1CR4	1901-0040	1		DIODE-SWITCHING 30V 50MA 2NS DO-35	28480	1901-0040
A1CR5	1901-0040	1		DIODE-SWITCHING 30V 50MA 2NS DO-35	28480	1901-0040
A1CR6	1901-0040	1		DIODE-SWITCHING 30V 50MA 2NS DO-35	28480	1901-0040
A1CR7	1902-0761	7	6	DIODE-ZNR 13V 5% DO-35 PD=.4W TC=+.082%	28480	1902-0761
A1CR8	1902-0961	7		DIODE-ZNR 13V 5% DO-35 PD=.4W TC=+.082%	28480	1902-0961
A1CR9	1901-0040	1		DIODE-SWITCHING 30V 50MA 2NS DO-35	28480	1901-0040
A1CR10	1901-0040	1		DIODE-SWITCHING 30V 50MA 2NS DO-35	28480	1901-0040
A1CR11	1902-0761	7		DIODE-ZNR 13V 5% DO-35 PD=.4W TC=+.082%	28480	1902-0761
A1CR12	1902-0961	7		DIODE-ZNR 13V 5% DO-35 PD=.4W TC=+.082%	28480	1902-0961
A1CR13	1901-0732	8	4	DIODE-PWR RECT 1KV 1A	28480	1901-0732
A1CR14	1901-0732	8		DIODE-PWR RECT 1KV 1A	28480	1901-0732
A1CR15	1901-0732	8		DIODE-PWR RECT 1KV 1A	28480	1901-0732
A1CR16	1901-0732	8		DIODE-PWR RECT 1KV 1A	28480	1901-0732
A1CR17	1901-0040	1		DIODE-SWITCHING 30V 50MA 2NS DO-35	28480	1901-0040
A1CR18	1901-0040	1		DIODE-SWITCHING 30V 50MA 2NS DO-35	28480	1901-0040
A1CR19	1901-0040	1		DIODE-SWITCHING 30V 50MA 2NS DO-35	28480	1901-0040
A1CR20	1901-0040	1		DIODE-SWITCHING 30V 50MA 2NS DO-35	28480	1901-0040
A1CR21	1902-0761	7		DIODE-ZNR 13V 5% DO-35 PD=.4W TC=+.082%	28480	1902-0761
A1CR22	1902-0961	7		DIODE-ZNR 13V 5% DO-35 PD=.4W TC=+.082%	28480	1902-0961
A1CR23	1902-0962	8	1	DIODE-ZNR 15V 5% DO-35 PD=.4W TC=+.087%	28480	1902-0962
A1CR24	1901-0050	3		DIODE-SWITCHING 80V 200MA 2NS DO-35	28480	1901-0050
A1CR25	1901-0050	3		DIODE-SWITCHING 80V 200MA 2NS DO-35	28480	1901-0050
A1CR103	1906-0069	4	1	DIODE-FW BRDG 400V 1A	28480	1906-0069
A1HS2	1205-0011	0	2	HEAT SINK TO-5/TO-39-CS	28480	1205-0011
A1HS3	1205-0011	0		HEAT SINK TO-5/TO-39-CS	28480	1205-0011
A1K106	0490-1354	8	5	RELAY 2C 5VDC-COIL 2A 250VAC	28480	0490-1354
A1K107	0490-1354	8		RELAY 2C 5VDC-COIL 2A 250VAC	28480	0490-1354
A1K108	0490-1354	8		RELAY 2C 5VDC-COIL 2A 250VAC	28480	0490-1354
A1K306	0490-1354	8		RELAY 2C 5VDC-COIL 2A 250VAC	28480	0490-1354
A1K606	0490-1354	8		RELAY 2C 5VDC-COIL 2A 250VAC	28480	0490-1354

See introduction to this section for ordering information
*Indicates factory selected value

Table 6-2. 4945A Replaceable Parts (Cont'd)

Reference Designation	HP Part Number	C D	Qty	Description	Mfr Code	Mfr Part Number
A1P1	1251-7506	9	1	CONN-POST TYPE .100-PIN-SPCG 120-CONT	28480	1251-7506
A1Q1	1854-0643	9	1	TRANSISTOR NPN 2N3585 SI TO-66 PD=35W	3L585	2N3585
A1Q2	1854-0071	7	1	TRANSISTOR NPN SI PD=300MW FT=200MHZ	28480	1854-0071
A1Q3	1854-0575	6	3	TRANSISTOR NPN SI PD=625MW FT=50MHZ	04713	MPS-A42
A1Q4	1854-0575	6		TRANSISTOR NPN SI PD=625MW FT=50MHZ	04713	MPS-A42
A1Q5	1854-0575	6		TRANSISTOR NPN SI PD=625MW FT=50MHZ	04713	MPS-A42
A1Q6	1854-0079	5	4	TRANSISTOR NPN 2N3439 SI TO-5 PD=1W	3L585	2N3439
A1Q7	1854-0079	5		TRANSISTOR NPN 2N3439 SI TO-5 PD=1W	3L585	2N3439
A1Q8	1854-0079	5		TRANSISTOR NPN 2N3439 SI TO-5 PD=1W	3L585	2N3439
A1Q9	1854-0079	5		TRANSISTOR NPN 2N3439 SI TO-5 PD=1W	3L585	2N3439
A1Q10	1853-0281	9	4	TRANSISTOR PNP 2N2907A SI TO-18 PD=400MW	04713	2N2907A
A1Q11	1853-0281	9		TRANSISTOR PNP 2N2907A SI TO-18 PD=400MW	04713	2N2907A
A1Q12	1853-0281	9		TRANSISTOR PNP 2N2907A SI TO-18 PD=400MW	04713	2N2907A
A1Q13	1853-0281	9		TRANSISTOR PNP 2N2907A SI TO-18 PD=400MW	04713	2N2907A
A1Q14	1855-0497	3	1	TRANSISTOR MOSFET N-CHAN E-MODE TO-220	28480	1855-0497
A1Q15	1854-0215	1	1	TRANSISTOR NPN SI PD=350MW FT=300MHZ	04713	2N3904
A1R1	0757-0382	6	1	RESISTOR 16.2 1% .125W F TC=0+-100	19701	MF4C1/8-T0-16R2-F
A1R2	2100-3164	9	1	RESISTOR-TRMR 10 20% C SIDE-ADJ 17-TRN	02111	43P100
A1R3	0698-3453	2	1	RESISTOR 196K 1% .125W F TC=0+-100	24546	C4-1/8-T0-1963-F
A1R4	0698-8826	3	1	RESISTOR 825K 1% .125W F TC=0+-100	28480	0698-8826
A1R5	0698-3459	8	1	RESISTOR 383K 1% .125W F TC=0+-100	28480	0698-3459
A1R6	0757-0199	3	1	RESISTOR 21.5K 1% .125W F TC=0+-100	24546	C4-1/8-T0-2152-F
A1R7	0757-0401	0	21	RESISTOR 100 1% .125W F TC=0+-100	24546	C4-1/8-T0-101-F
A1R8	0757-0401	0		RESISTOR 100 1% .125W F TC=0+-100	24546	C4-1/8-T0-101-F
A1R9	0757-0401	0		RESISTOR 100 1% .125W F TC=0+-100	24546	C4-1/8-T0-101-F
A1R10	0757-0401	0		RESISTOR 100 1% .125W F TC=0+-100	24546	C4-1/8-T0-101-F
A1R11	0698-8638	5	6	RESISTOR 3.16K .1% .125W F TC=0+-25	28480	0698-8638
A1R12	0698-3452	1	2	RESISTOR 147K 1% .125W F TC=0+-100	24546	C4-1/8-T0-1473-F
A1R13	0698-8638	5		RESISTOR 3.16K .1% .125W F TC=0+-25	28480	0698-8638
A1R14	0698-8638	5		RESISTOR 3.16K .1% .125W F TC=0+-25	28480	0698-8638
A1R15	0757-0401	0		RESISTOR 100 1% .125W F TC=0+-100	24546	C4-1/8-T0-101-F
A1R16	0757-0280	3	4	RESISTOR 1K 1% .125W F TC=0+-100	24546	C4-1/8-T0-1001-F
A1R17	0757-0280	3		RESISTOR 1K 1% .125W F TC=0+-100	24546	C4-1/8-T0-1001-F
A1R18	0757-0401	0		RESISTOR 100 1% .125W F TC=0+-100	24546	C4-1/8-T0-101-F
A1R19	0757-0401	0		RESISTOR 100 1% .125W F TC=0+-100	24546	C4-1/8-T0-101-F
A1R20	0698-8638	5		RESISTOR 3.16K .1% .125W F TC=0+-25	28480	0698-8638
A1R21	0698-3452	1		RESISTOR 147K 1% .125W F TC=0+-100	24546	C4-1/8-T0-1473-F
A1R22	0698-4343	1	3	RESISTOR 100 .1% .125W F TC=0+-50	28480	0698-4343
A1R23	0698-4343	1		RESISTOR 100 .1% .125W F TC=0+-50	28480	0698-4343
A1R24	0699-1092	3	2	RESISTOR 600 .25% .5W F TC=0+-50	28480	0699-1092
A1R25	0699-1092	3		RESISTOR 600 .25% .5W F TC=0+-50	28480	0699-1092
A1R26	0699-0658	5	2	RESISTOR 450 .25% .5W F TC=0+-50	28480	0699-0658
A1R27	0699-0658	5		RESISTOR 450 .25% .5W F TC=0+-50	28480	0699-0658
A1R28	0698-8558	8	2	RESISTOR 67.3 .25% .5W F TC=0+-50	28480	0698-8558
A1R29	0698-8558	8		RESISTOR 67.3 .25% .5W F TC=0+-50	28480	0698-8558
A1R30	0699-0657	4	2	RESISTOR 300 .25% .5W F TC=0+-50	28480	0699-0657
A1R31	0699-0657	4		RESISTOR 300 .25% .5W F TC=0+-50	28480	0699-0657
A1R32	0757-0280	3		RESISTOR 1K 1% .125W F TC=0+-100	24546	C4-1/8-T0-1001-F
A1R33	0757-0280	3		RESISTOR 1K 1% .125W F TC=0+-100	24546	C4-1/8-T0-1001-F
A1R34	0757-0401	0		RESISTOR 100 1% .125W F TC=0+-100	24546	C4-1/8-T0-101-F
A1R35	0757-0401	0		RESISTOR 100 1% .125W F TC=0+-100	24546	C4-1/8-T0-101-F
A1R36	0698-6446	9	4	RESISTOR 2.162K .1% .125W F TC=0+-25	28480	0698-6446
A1R37	0698-6446	9		RESISTOR 2.162K .1% .125W F TC=0+-25	28480	0698-6446
A1R38	0698-6446	9		RESISTOR 2.162K .1% .125W F TC=0+-25	28480	0698-6446
A1R39	0698-6446	9		RESISTOR 2.162K .1% .125W F TC=0+-25	28480	0698-6446
A1R40	0757-0465	6	3	RESISTOR 100K 1% .125W F TC=0+-100	24546	C4-1/8-T0-1003-F
A1R41	0698-8638	5		RESISTOR 3.16K .1% .125W F TC=0+-25	28480	0698-8638
A1R42	0698-8638	5		RESISTOR 3.16K .1% .125W F TC=0+-25	28480	0698-8638
A1R43	0698-6362	8	3	RESISTOR 1K .1% .125W F TC=0+-25	28480	0698-6362
A1R44	0698-6362	8		RESISTOR 1K .1% .125W F TC=0+-25	28480	0698-6362
A1R45	0757-0401	0		RESISTOR 100 1% .125W F TC=0+-100	24546	C4-1/8-T0-101-F
A1R46	0757-0465	6		RESISTOR 100K 1% .125W F TC=0+-100	24546	C4-1/8-T0-1003-F
A1R47	0757-0465	6		RESISTOR 100K 1% .125W F TC=0+-100	24546	C4-1/8-T0-1003-F
A1R48	0757-0401	0		RESISTOR 100 1% .125W F TC=0+-100	24546	C4-1/8-T0-101-F
A1R49	0757-0401	0		RESISTOR 100 1% .125W F TC=0+-100	24546	C4-1/8-T0-101-F
A1R50	0757-0401	0		RESISTOR 100 1% .125W F TC=0+-100	24546	C4-1/8-T0-101-F
A1R51	0757-0401	0		RESISTOR 100 1% .125W F TC=0+-100	24546	C4-1/8-T0-101-F
A1R52	0698-6362	8		RESISTOR 1K .1% .125W F TC=0+-25	28480	0698-6362
A1R53	0698-5454	7	2	RESISTOR 9K .1% .125W F TC=0+-50	28480	0698-5454
A1R54	2100-3123	0	1	RESISTOR-TRMR 500 10% C SIDE-ADJ 17-TRN	02111	43P501
A1R55	0757-0401	0		RESISTOR 100 1% .125W F TC=0+-100	24546	C4-1/8-T0-101-F
A1R56	0683-2255	9	1	RESISTOR 2.2M 5% .25W FC TC=-900/+1100	01121	CB2255
A1R57	0698-8958	2	2	RESISTOR 511K 1% .125W F TC=0+-100	28480	0698-8958
A1R58	0698-8958	2		RESISTOR 511K 1% .125W F TC=0+-100	28480	0698-8958
A1R59	0698-5454	7		RESISTOR 9K .1% .125W F TC=0+-50	28480	0698-5454
A1R60	0757-0401	0		RESISTOR 100 1% .125W F TC=0+-100	24546	C4-1/8-T0-101-F

See introduction to this section for ordering information
*Indicates factory selected value

Table 6-2. 4945A Replaceable Parts (Cont'd)

Reference Designation	HP Part Number	C D	Qty	Description	Mfr Code	Mfr Part Number
A1R61	0757-0401	0		RESISTOR 100 1% .125W F TC=0+-100	24546	C4-1/8-T0-101-F
A1R62	0698-6344	6	1	RESISTOR 900 .1% .125W F TC=0+-25	28480	0698-6344
A1R63	0698-4343	1		RESISTOR 100 .1% .125W F TC=0+-50	28480	0698-4343
A1R64	0757-0401	0		RESISTOR 100 1% .125W F TC=0+-100	24546	C4-1/8-T0-101-F
A1R65	0757-0401	0		RESISTOR 100 1% .125W F TC=0+-100	24546	C4-1/8-T0-101-F
A1R66	0757-0401	0		RESISTOR 100 1% .125W F TC=0+-100	24546	C4-1/8-T0-101-F
A1R67	0698-0085	0	1	RESISTOR 2.61K 1% .125W F TC=0+-100	24546	C4-1/8-T0-2611-F
A1R68	0757-0401	0		RESISTOR 100 1% .125W F TC=0+-100	24546	C4-1/8-T0-101-F
A1R701	1810-0231	9	1	NETWORK-RES 8-SIP2.2K OHM X 7	01121	208A222
A1TP1	0380-1682	2	3		28480	0380-1682
A1TP2	0380-1682	2			28480	0380-1682
A1TP3	0380-1682	2			28480	0380-1682
A1U200	1858-0076	0	2	TRANSISTOR ARRAY 14-PIN PLSTC TO-116	04713	MPQ2907P
A1U300	1858-0076	0		TRANSISTOR ARRAY 14-PIN PLSTC TO-116	04713	MPQ2907P
A1U302	1826-0735	1	5	IC OP AMP H-SLEW-RATE 8-DIP-P PKG	34371	HA3-2507-5
A1U400	1810-0037	3	1	NETWORK-RES 16-DIP1.0K OHM X 8	11236	761-3-R1K
A1U402	1826-0735	1		IC OP AMP H-SLEW-RATE 8-DIP-P PKG	34371	HA3-2507-5
A1U500	1820-1216	3	2	IC DCDR TTL LS 3-TO-8-LINE 3-INP	01295	SN74LS138N
A1U502	1826-0735	1		IC OP AMP H-SLEW-RATE 8-DIP-P PKG	34371	HA3-2507-5
A1U600	1820-1858	9	2	IC FF TTL LS D-TYPE OCTL	01295	SN74LS377N
A1U602	1820-1725	9	1	IC MULTIPLXR ANLG 16-DIP-P PKG	17856	DG508CJ
A1U700	1820-1858	9		IC FF TTL LS D-TYPE OCTL	01295	SN74LS377N
A1U702	1826-0735	1		IC OP AMP H-SLEW-RATE 8-DIP-P PKG	34371	HA3-2507-5
A1U800	1820-1216	3		IC DCDR TTL LS 3-TO-8-LINE 3-INP	01295	SN74LS138N
A1U802	1826-0740	8	1	IC SWITCH ANLG DUAL 16-DIP-C PKG	32293	IH5043CDE
A1U803	1826-0735	1		IC OP AMP H-SLEW-RATE 8-DIP-P PKG	34371	HA3-2507-5
A1U900	1820-1419	8	1	IC COMPTR TTL LS MAGTD 4-BIT	01295	SN74LS85N
A1U906	1826-0915	9	1	IC OP AMP LOW-BIAS-H-IMPD 8-DIP-C PKG	01295	TL071ACJG (PER HP DWG)
	0340-0060	4	1	TERMINAL-STUD SPCL-FDTHRU PRESS-MTG	98291	011-6809 000 209
	0590-0076	1	1	NUT-HEX-PLSTC LKG 4-40-THD .143-IN-THK	28480	0590-0076
	1200-0173	5	4	INSULATOR-XSTR DAP-GL	28480	1200-0173
	1400-0493	6	2	CABLE TIE .062-1.25-DIA .14-WD NYL	06383	PLT1.5-M8
	1480-0116	8	2	PIN-GRV .062-IN-DIA .25-IN-LG STL	28480	1480-0116
	2190-0004	9	1	WASHER-LK INTL T NO. 4 .115-IN-ID	28480	2190-0004
	2200-0105	4	1	SCREW-MACH 4-40 .312-IN-LG PAN-HD-POZI	00000	ORDER BY DESCRIPTION
	2360-0117	6	1	SCREW-MACH 6-32 .375-IN-LG PAN-HD-POZI	00000	ORDER BY DESCRIPTION
	2420-0023	1	1	NUT-HEX-W/LKWR 6-32-THD .109-IN-THK	28480	2420-0023
	4040-0747	2	1	EXTR-PC BD GRA POLYC .062-BD-THKNS	28480	4040-0747
	5080-8538	0	1	A1-ID LABEL	28480	5080-8538
	04945-00026	6	1	MOUNTING BRKT	28480	04945-00026
	04945-20001	9	1	RCVR INPUT BDBLK	28480	04945-20001

See introduction to this section for ordering information
*Indicates factory selected value

Table 6-2. 4945A Replaceable Parts (Cont'd)

Reference Designation	HP Part Number	C D	Qty	Description	Mfr Code	Mfr Part Number
A2	04945-60002	4	1	FILTER BOARD	28480	04945-60002
A2C1	0160-5298	8	37	CAPACITOR-FXD .01UF +-20% 100VDC CER	28480	0160-5298
A2C2	0160-5658	4	9	CAPACITOR-FXD 1700PF +-1% 100VDC CER	28480	0160-5658
A2C3	0160-5298	8		CAPACITOR-FXD .01UF +-20% 100VDC CER	28480	0160-5298
A2C4	0160-5658	4		CAPACITOR-FXD 1700PF +-1% 100VDC CER	28480	0160-5658
A2C5	0160-5332	1	12	CAPACITOR-FXD .1UF +-20% 50VDC CER	28480	0160-5332
A2C6	0160-4426	2	10	CAPACITOR-FXD .01UF +-1% 100VDC CER	28480	0160-4426
A2C7	0160-5332	1		CAPACITOR-FXD .1UF +-20% 50VDC CER	28480	0160-5332
A2C8	0160-4426	2		CAPACITOR-FXD .01UF +-1% 100VDC CER	28480	0160-4426
A2C9	0160-5332	1		CAPACITOR-FXD .1UF +-20% 50VDC CER	28480	0160-5332
A2C10	0160-4426	2		CAPACITOR-FXD .01UF +-1% 100VDC CER	28480	0160-4426
A2C11	0160-0127	2	6	CAPACITOR-FXD 1UF +-20% 25VDC CER	28480	0160-0127
A2C12	0160-5659	5	7	CAPACITOR-FXD 2400PF +-1% 100VDC CER	28480	0160-5659
A2C13	0160-5657	3	7	CAPACITOR-FXD 1200PF +-1% 100VDC CER	28480	0160-5657
A2C14	0160-5298	8		CAPACITOR-FXD .01UF +-20% 100VDC CER	28480	0160-5298
A2C15	0160-5660	8	8	CAPACITOR-FXD 5100PF +-1% 100VDC CER	28480	0160-5660
A2C16	0160-0128	3	1	CAPACITOR-FXD 2.2UF +-20% 50VDC CER	28480	0160-0128
A2C17	0160-5298	8		CAPACITOR-FXD .01UF +-20% 100VDC CER	28480	0160-5298
A2C18	0160-5660	8		CAPACITOR-FXD 5100PF +-1% 100VDC CER	28480	0160-5660
A2C19	0160-5332	1		CAPACITOR-FXD .1UF +-20% 50VDC CER	28480	0160-5332
A2C20	0160-4426	2		CAPACITOR-FXD .01UF +-1% 100VDC CER	28480	0160-4426
A2C21	0160-5332	1		CAPACITOR-FXD .1UF +-20% 50VDC CER	28480	0160-5332
A2C22	0160-4426	2		CAPACITOR-FXD .01UF +-1% 100VDC CER	28480	0160-4426
A2C23	0160-0127	2		CAPACITOR-FXD 1UF +-20% 25VDC CER	28480	0160-0127
A2C24	0160-5332	1		CAPACITOR-FXD .1UF +-20% 50VDC CER	28480	0160-5332
A2C25	0160-4426	2		CAPACITOR-FXD .01UF +-1% 100VDC CER	28480	0160-4426
A2C26	0160-5298	8		CAPACITOR-FXD .01UF +-20% 100VDC CER	28480	0160-5298
A2C27	0160-0127	2		CAPACITOR-FXD 1UF +-20% 25VDC CER	28480	0160-0127
A2C28	0160-5659	5		CAPACITOR-FXD 2400PF +-1% 100VDC CER	28480	0160-5659
A2C29	0160-5657	3		CAPACITOR-FXD 1200PF +-1% 100VDC CER	28480	0160-5657
A2C30	0160-5298	8		CAPACITOR-FXD .01UF +-20% 100VDC CER	28480	0160-5298
A2C31	0160-5659	5		CAPACITOR-FXD 2400PF +-1% 100VDC CER	28480	0160-5659
A2C32	0160-5657	3		CAPACITOR-FXD 1200PF +-1% 100VDC CER	28480	0160-5657
A2C33	0160-5658	4		CAPACITOR-FXD 1700PF +-1% 100VDC CER	28480	0160-5658
A2C34	0160-0127	2		CAPACITOR-FXD 1UF +-20% 25VDC CER	28480	0160-0127
A2C35	0160-5660	8		CAPACITOR-FXD 5100PF +-1% 100VDC CER	28480	0160-5660
A2C36	0160-5660	8		CAPACITOR-FXD 5100PF +-1% 100VDC CER	28480	0160-5660
A2C37	0160-5660	8		CAPACITOR-FXD 5100PF +-1% 100VDC CER	28480	0160-5660
A2C38	0160-4426	2		CAPACITOR-FXD .01UF +-1% 100VDC CER	28480	0160-4426
A2C39	0160-0127	2		CAPACITOR-FXD 1UF +-20% 25VDC CER	28480	0160-0127
A2C40	0160-4535	4	2	CAPACITOR-FXD 1UF +-10% 50VDC CER	28480	0160-4535
A2C41	0160-5298	8		CAPACITOR-FXD .01UF +-20% 100VDC CER	28480	0160-5298
A2C42	0160-5298	8		CAPACITOR-FXD .01UF +-20% 100VDC CER	28480	0160-5298
A2C43	0160-4679	7	1	CAPACITOR-FXD 270PF +-1% 300VDC MICA	28480	0160-4679
A2C44	0160-4535	4	1	CAPACITOR-FXD 1UF +-10% 50VDC CER	28480	0160-4535
A2C45	0160-5654	0	1	CAPACITOR-FXD 680PF +-1% 100VDC MICA	28480	0160-5654
A2C46	0160-5298	8		CAPACITOR-FXD .01UF +-20% 100VDC CER	28480	0160-5298
A2C47	0160-5298	8		CAPACITOR-FXD .01UF +-20% 100VDC CER	28480	0160-5298
A2C48	0160-5298	8		CAPACITOR-FXD .01UF +-20% 100VDC CER	28480	0160-5298
A2C49	0160-5298	8		CAPACITOR-FXD .01UF +-20% 100VDC CER	28480	0160-5298
A2C50	0160-5298	8		CAPACITOR-FXD .01UF +-20% 100VDC CER	28480	0160-5298
A2C51	0160-5298	8		CAPACITOR-FXD .01UF +-20% 100VDC CER	28480	0160-5298
A2C52	0160-5298	8		CAPACITOR-FXD .01UF +-20% 100VDC CER	28480	0160-5298
A2C53	0160-5298	8		CAPACITOR-FXD .01UF +-20% 100VDC CER	28480	0160-5298
A2C54	0160-5298	8		CAPACITOR-FXD .01UF +-20% 100VDC CER	28480	0160-5298
A2C55	0160-5298	8		CAPACITOR-FXD .01UF +-20% 100VDC CER	28480	0160-5298
A2C56	0160-5298	8		CAPACITOR-FXD .01UF +-20% 100VDC CER	28480	0160-5298
A2C57	0160-5332	1		CAPACITOR-FXD .1UF +-20% 50VDC CER	28480	0160-5332
A2C58	0160-5332	1		CAPACITOR-FXD .1UF +-20% 50VDC CER	28480	0160-5332
A2C59	0160-4426	2		CAPACITOR-FXD .01UF +-1% 100VDC CER	28480	0160-4426
A2C60	0160-5659	5		CAPACITOR-FXD 2400PF +-1% 100VDC CER	28480	0160-5659
A2C61	0160-5657	3		CAPACITOR-FXD 1200PF +-1% 100VDC CER	28480	0160-5657
A2C62	0160-5658	4		CAPACITOR-FXD 1700PF +-1% 100VDC CER	28480	0160-5658
A2C63	0160-5660	8		CAPACITOR-FXD 5100PF +-1% 100VDC CER	28480	0160-5660
A2C64	0160-4567	2	4	CAPACITOR-FXD 3900PF +-1% 100VDC CER	28480	0160-4567
A2C65	0160-5658	4		CAPACITOR-FXD 1700PF +-1% 100VDC CER	28480	0160-5658
A2C66	0160-5658	4		CAPACITOR-FXD 1700PF +-1% 100VDC CER	28480	0160-5658
A2C67	0160-5298	8		CAPACITOR-FXD .01UF +-20% 100VDC CER	28480	0160-5298
A2C68	0160-5298	8		CAPACITOR-FXD .01UF +-20% 100VDC CER	28480	0160-5298
A2C69	0160-5332	1		CAPACITOR-FXD .1UF +-20% 50VDC CER	28480	0160-5332
A2C70	0160-5657	3		CAPACITOR-FXD 1200PF +-1% 100VDC CER	28480	0160-5657

See introduction to this section for ordering information
*Indicates factory selected value

Table 6-2. 4945A Replaceable Parts (Cont'd)

Reference Designation	HP Part Number	C D	Qty	Description	Mfr Code	Mfr Part Number
A2C71	0160-4567	2		CAPACITOR-FXD 3900PF +-1% 100VDC CER	28480	0160-4567
A2C72	0160-4535	4		CAPACITOR-FXD 1UF +-10% 50VDC CER	28480	0160-4535
A2C73	0160-5660	8		CAPACITOR-FXD 5100PF +-1% 100VDC CER	28480	0160-5660
A2C74	0160-4426	2		CAPACITOR-FXD .01UF +-1% 100VDC CER	28480	0160-4426
A2C75	0160-4426	2		CAPACITOR-FXD .01UF +-1% 100VDC CER	28480	0160-4426
A2C76	0160-4567	2		CAPACITOR-FXD 3900PF +-1% 100VDC CER	28480	0160-4567
A2C77	0160-5659	5		CAPACITOR-FXD 2400PF +-1% 100VDC CER	28480	0160-5659
A2C78	0160-5657	3		CAPACITOR-FXD 1200PF +-1% 100VDC CER	28480	0160-5657
A2C79	0140-0225	7	1	CAPACITOR-FXD 300PF +-1% 300VDC MICA	72136	DM15F301F0300WV1C
A2C80	0160-5660	8		CAPACITOR-FXD 5100PF +-1% 100VDC CER	28480	0160-5660
A2C81	0160-5332	1		CAPACITOR-FXD .1UF +-20% 50VDC CER	28480	0160-5332
A2C82	0160-5298	8		CAPACITOR-FXD .01UF +-20% 100VDC CER	28480	0160-5298
A2C83	0160-5298	8		CAPACITOR-FXD .01UF +-20% 100VDC CER	28480	0160-5298
A2C84	0160-5298	8		CAPACITOR-FXD .01UF +-20% 100VDC CER	28480	0160-5298
A2C85	0160-5298	8		CAPACITOR-FXD .01UF +-20% 100VDC CER	28480	0160-5298
A2C86	0160-5298	8		CAPACITOR-FXD .01UF +-20% 100VDC CER	28480	0160-5298
A2C87	0160-5298	8		CAPACITOR-FXD .01UF +-20% 100VDC CER	28480	0160-5298
A2C88	0160-5298	8		CAPACITOR-FXD .01UF +-20% 100VDC CER	28480	0160-5298
A2C89	0160-5298	8		CAPACITOR-FXD .01UF +-20% 100VDC CER	28480	0160-5298
A2C90	0160-0127	2		CAPACITOR-FXD 1UF +-20% 25VDC CER	28480	0160-0127
A2C91	0160-5298	8		CAPACITOR-FXD .01UF +-20% 100VDC CER	28480	0160-5298
A2C92	0160-5298	8		CAPACITOR-FXD .01UF +-20% 100VDC CER	28480	0160-5298
A2C93	0160-5298	8		CAPACITOR-FXD .01UF +-20% 100VDC CER	28480	0160-5298
A2C94	0160-5298	8		CAPACITOR-FXD .01UF +-20% 100VDC CER	28480	0160-5298
A2C95	0160-5332	1		CAPACITOR-FXD .1UF +-20% 50VDC CER	28480	0160-5332
A2C96	0160-5332	1		CAPACITOR-FXD .1UF +-20% 50VDC CER	28480	0160-5332
A2C97	0160-5659	5		CAPACITOR-FXD 2400PF +-1% 100VDC CER	28480	0160-5659
A2C98	0160-5657	3		CAPACITOR-FXD 1200PF +-1% 100VDC CER	28480	0160-5657
A2C99	0160-4567	2		CAPACITOR-FXD 3900PF +-1% 100VDC CER	28480	0160-4567
A2C100	0160-5658	4		CAPACITOR-FXD 1700PF +-1% 100VDC CER	28480	0160-5658
A2C101	0160-5659	5		CAPACITOR-FXD 2400PF +-1% 100VDC CER	28480	0160-5659
A2C102	0160-5658	4		CAPACITOR-FXD 1700PF +-1% 100VDC CER	28480	0160-5658
A2C103	0160-5658	4		CAPACITOR-FXD 1700PF +-1% 100VDC CER	28480	0160-5658
A2C104	0180-0374	3	3	CAPACITOR-FXD 10UF+-10% 20VDC TA	56289	150D106X9020B2
A2C105	0160-5298	8		CAPACITOR-FXD .01UF +-20% 100VDC CER	28480	0160-5298
A2C106	0180-0374	3		CAPACITOR-FXD 10UF+-10% 20VDC TA	56289	150D106X9020B2
A2C107	0160-5298	8		CAPACITOR-FXD .01UF +-20% 100VDC CER	28480	0160-5298
A2C108	0180-0374	3		CAPACITOR-FXD 10UF+-10% 20VDC TA	56289	150D106X9020B2
A2C109	0160-5298	8		CAPACITOR-FXD .01UF +-20% 100VDC CER	28480	0160-5298
A2C110	0160-5298	8		CAPACITOR-FXD .01UF +-20% 100VDC CER	28480	0160-5298
A2C111	0160-4463	7	3	CAPACITOR-FXD .1UF +-1% 50VDC MET-POLYC	28480	0160-4463
A2C112	0160-4463	7		CAPACITOR-FXD .1UF +-1% 50VDC MET-POLYC	28480	0160-4463
A2C113	0160-4463	7		CAPACITOR-FXD .1UF +-1% 50VDC MET-POLYC	28480	0160-4463
A2CR1	1990-0810	0	3	LED-LAMP LUM-INT=2.5MCD IF=20MA-MAX	28480	1990-0810
A2CR2	1990-0810	0		LED-LAMP LUM-INT=2.5MCD IF=20MA-MAX	28480	1990-0810
A2CR3	1990-0810	0		LED-LAMP LUM-INT=2.5MCD IF=20MA-MAX	28480	1990-0810
A2JU1	1251-4398	1	1	CONNECTOR SHUNT-4 POSITION	28480	1251-4398
A2P1	1251-7986	9	1	CONN-POST TYPE .100-PIN-SPCG 50-CONT	28480	1251-7986
A2Q1	1854-0215	1	3	TRANSISTOR NPN SI PD=350MW FT=300MHZ	04713	2N3904
A2Q2	1854-0215	1		TRANSISTOR NPN SI PD=350MW FT=300MHZ	04713	2N3904
A2Q3	1854-0215	1		TRANSISTOR NPN SI PD=350MW FT=300MHZ	04713	2N3904
A2R1	0698-6320	8	2	RESISTOR 5K .1% .125W F TC=0+-25	03888	PME55-1/8-T9-5001-B
A2R2	0698-8784	2	3	RESISTOR 19.6K .1% .125W F TC=0+-25	28480	0698-8784
A2R3	0698-4520	6	2	RESISTOR 143K 1% .125W F TC=0+-100	24546	C4-1/8-T0-1433-F
A2R4	0698-8695	4	2	RESISTOR 36K .1% .125W F TC=0+-25	28480	0698-8695
A2R5	0698-6320	8		RESISTOR 5K .1% .125W F TC=0+-25	03888	PME55-1/8-T9-5001-B
A2R6	0698-8784	2		RESISTOR 19.6K .1% .125W F TC=0+-25	28480	0698-8784
A2R7	0698-4520	6		RESISTOR 143K 1% .125W F TC=0+-100	24546	C4-1/8-T0-1433-F
A2R8	0698-8695	4		RESISTOR 36K .1% .125W F TC=0+-25	28480	0698-8695
A2R9	0698-6360	6	12	RESISTOR 10K .1% .125W F TC=0+-25	28480	0698-6360
A2R10	0699-0587	9	2	RESISTOR 12.910K .1% .125W F TC=0+-25	28480	0699-0587
A2R11	0757-0403	2	12	RESISTOR 121 1% .125W F TC=0+-100	24546	C4-1/8-T0-121R-F
A2R12	0698-6360	6		RESISTOR 10K .1% .125W F TC=0+-25	28480	0698-6360
A2R13	0699-0586	8	1	RESISTOR 186.365K .1% .125W F TC=0+-25	28480	0699-0586
A2R14	0699-0585	7	1	RESISTOR 240.730K .1% .125W F TC=0+-25	28480	0699-0585
A2R15	0698-6360	6		RESISTOR 10K .1% .125W F TC=0+-25	28480	0698-6360
A2R16	0698-6360	6		RESISTOR 10K .1% .125W F TC=0+-25	28480	0698-6360
A2R17	0757-0403	2		RESISTOR 121 1% .125W F TC=0+-100	24546	C4-1/8-T0-121R-F
A2R18	0698-6360	6		RESISTOR 10K .1% .125W F TC=0+-25	28480	0698-6360
A2R19	0699-0589	1	2	RESISTOR 34.334K .1% .125W F TC=0+-25	28480	0699-0589
A2R20	0699-0589	1		RESISTOR 34.334K .1% .125W F TC=0+-25	28480	0699-0589
A2R21	0698-6360	6		RESISTOR 10K .1% .125W F TC=0+-25	28480	0698-6360
A2R22	0699-0592	6	1	RESISTOR 7.741K .1% .125W F TC=0+-25	28480	0699-0592
A2R23	0757-0403	2		RESISTOR 121 1% .125W F TC=0+-100	24546	C4-1/8-T0-121R-F
A2R24	0698-6360	6		RESISTOR 10K .1% .125W F TC=0+-25	28480	0698-6360
A2R25	0699-0591	5	1	RESISTOR 140.158K .1% .125W F TC=0+-25	28480	0699-0591

See introduction to this section for ordering information
*Indicates factory selected value

Table 6-2. 4945A Replaceable Parts (Cont'd)

Reference Designation	HP Part Number	CD	Qty	Description	Mfr Code	Mfr Part Number
A2R26	0699-0600	7	1	RESISTOR 100.502K .1% .125W F TC=0+-25	28480	0699-0600
A2R27	0757-0290	5	2	RESISTOR 6.19K 1% .125W F TC=0+-100	19701	MF4C1/8-T0-6191-F
A2R28	0757-0199	3	5	RESISTOR 21.5K 1% .125W F TC=0+-100	24546	C4-1/8-T0-2152-F
A2R29	0757-0290	5		RESISTOR 6.19K 1% .125W F TC=0+-100	19701	MF4C1/8-T0-6191-F
A2R30	0698-6619	8	2	RESISTOR 15K .1% .125W F TC=0+-25	28480	0698-6619
A2R31	0698-6627	8	2	RESISTOR 25K .1% .125W F TC=0+-25	28480	0698-6627
A2R32	0757-0462	3	6	RESISTOR 75K 1% .125W F TC=0+-100	24546	C4-1/8-T0-7502-F
A2R33	0698-6619	8		RESISTOR 15K .1% .125W F TC=0+-25	28480	0698-6619
A2R34	0698-6627	8		RESISTOR 25K .1% .125W F TC=0+-25	28480	0698-6627
A2R35	0757-0442	9	4	RESISTOR 10K 1% .125W F TC=0+-100	24546	C4-1/8-T0-1002-F
A2R36	0698-3440	7	3	RESISTOR 196 1% .125W F TC=0+-100	24546	C4-1/8-T0-196R-F
A2R37	0757-0442	9		RESISTOR 10K 1% .125W F TC=0+-100	24546	C4-1/8-T0-1002-F
A2R38	0698-3440	7		RESISTOR 196 1% .125W F TC=0+-100	24546	C4-1/8-T0-196R-F
A2R39	0757-0442	9		RESISTOR 10K 1% .125W F TC=0+-100	24546	C4-1/8-T0-1002-F
A2R40	0698-3440	7		RESISTOR 196 1% .125W F TC=0+-100	24546	C4-1/8-T0-196R-F
A2R41	0699-0588	0	3	RESISTOR 10.171K .1% .125W F TC=0+-25	28480	0699-0588
A2R42	0757-0403	2		RESISTOR 121 1% .125W F TC=0+-100	24546	C4-1/8-T0-121R-F
A2R43	0699-0588	0		RESISTOR 10.171K .1% .125W F TC=0+-25	28480	0699-0588
A2R44	0698-4300	8	3	RESISTOR 16.9K 1% .125W F TC=0+-100	24546	C4-1/8-T0-1692-F
A2R45	0699-0590	4	2	RESISTOR 15.758K .1% .125W F TC=0+-25	28480	0699-0590
A2R46	0757-0403	2		RESISTOR 121 1% .125W F TC=0+-100	24546	C4-1/8-T0-121R-F
A2R47	0699-0590	4		RESISTOR 15.758K .1% .125W F TC=0+-25	28480	0699-0590
A2R48	0757-0289	2	1	RESISTOR 13.3K 1% .125W F TC=0+-100	19701	MF4C1/8-T0-1332-F
A2R49	0757-0462	3		RESISTOR 75K 1% .125W F TC=0+-100	24546	C4-1/8-T0-7502-F
A2R50	0699-0593	7	2	RESISTOR 13.665K .1% .125W F TC=0+-25	28480	0699-0593
A2R51	0757-0403	2		RESISTOR 121 1% .125W F TC=0+-100	24546	C4-1/8-T0-121R-F
A2R52	0699-0593	7		RESISTOR 13.665K .1% .125W F TC=0+-25	28480	0699-0593
A2R53	0757-0443	0	1	RESISTOR 11K 1% .125W F TC=0+-100	24546	C4-1/8-T0-1102-F
A2R54	0757-0199	3		RESISTOR 21.5K 1% .125W F TC=0+-100	24546	C4-1/8-T0-2152-F
A2R55	0698-6423	2	3	RESISTOR 31.25K .1% .125W F TC=0+-25	28480	0698-6423
A2R56	0698-6423	2		RESISTOR 31.25K .1% .125W F TC=0+-25	28480	0698-6423
A2R57	0698-6624	5	1	RESISTOR 2K .1% .125W F TC=0+-25	28480	0698-6624
A2R58	0698-6963	5	1	RESISTOR 5.55K .1% .125W F TC=0+-25	28480	0698-6963
A2R59	0699-0597	1	3	RESISTOR 2.26K .1% .125W F TC=0+-25	28480	0699-0597
A2R60	0699-0597	1		RESISTOR 2.26K .1% .125W F TC=0+-25	28480	0699-0597
A2R61	0698-6360	6		RESISTOR 10K .1% .125W F TC=0+-25	28480	0698-6360
A2R62	0698-8799	9	2	RESISTOR 21.5K .1% .125W F TC=0+-25	28480	0698-8799
A2R63	0698-6360	6		RESISTOR 10K .1% .125W F TC=0+-25	28480	0698-6360
A2R64	0699-0597	1		RESISTOR 2.26K .1% .125W F TC=0+-25	28480	0699-0597
A2R65	0757-0199	3		RESISTOR 21.5K 1% .125W F TC=0+-100	24546	C4-1/8-T0-2152-F
A2R66	0699-0596	0	1	RESISTOR 4.12K .1% .125W F TC=0+-25	28480	0699-0596
A2R67	0698-7375	5	1	RESISTOR 20.64K .1% .125W F TC=0+-50	19701	MF4C1/8-T2-20641-B
A2R68	0698-8850	3	1	RESISTOR 41.9K .1% .125W F TC=0+-25	28480	0698-8850
A2R69	0698-6964	6	1	RESISTOR 49.5K .1% .125W F TC=0+-25	28480	0698-6964
A2R70	0698-7382	4	1	RESISTOR 103.5K .1% .125W F TC=0+-50	19701	MF4C1/8-T2-10352-B
A2R71	0757-0199	3		RESISTOR 21.5K 1% .125W F TC=0+-100	24546	C4-1/8-T0-2152-F
A2R72	0757-0462	3		RESISTOR 75K 1% .125W F TC=0+-100	24546	C4-1/8-T0-7502-F
A2R73	0757-0462	3		RESISTOR 75K 1% .125W F TC=0+-100	24546	C4-1/8-T0-7502-F
A2R74	0698-6446	9	1	RESISTOR 2.162K .1% .125W F TC=0+-25	28480	0698-6446
A2R75	0698-6362	8	1	RESISTOR 1K .1% .125W F TC=0+-25	28480	0698-6362
A2R76	0757-0424	7	1	RESISTOR 1.1K 1% .125W F TC=0+-100	24546	C4-1/8-T0-1101-F
A2R77	0757-0428	1	1	RESISTOR 1.62K 1% .125W F TC=0+-100	24546	C4-1/8-T0-1621-F
A2R78	0757-0403	2		RESISTOR 121 1% .125W F TC=0+-100	24546	C4-1/8-T0-121R-F
A2R79	0757-0403	2		RESISTOR 121 1% .125W F TC=0+-100	24546	C4-1/8-T0-121R-F
A2R80	0698-3456	5	1	RESISTOR 287K 1% .125W F TC=0+-100	24546	C4-1/8-T0-2873-F
A2R81	0699-0594	8	2	RESISTOR 2.21K .1% .125W F TC=0+-25	28480	0699-0594
A2R82	0699-0594	8		RESISTOR 2.21K .1% .125W F TC=0+-25	28480	0699-0594
A2R83	0698-8337	1	1	RESISTOR 10.7K .1% .125W F TC=0+-50	19701	MF4C1/8-T2-1072-B
A2R84	0699-0754	2	1	RESISTOR 4.99K .1% .125W F TC=0+-25	28480	0699-0754
A2R85	0699-1051	4	1	RESISTOR 92.8K .1% .125W F TC=0+-25	28480	0699-1051
A2R86	0698-6477	6	2	RESISTOR 59.67K .25% .125W F TC=0+-50	28480	0698-6477
A2R87	0698-8799	9		RESISTOR 21.5K .1% .125W F TC=0+-25	28480	0698-8799
A2R88	0698-6423	2		RESISTOR 31.25K .1% .125W F TC=0+-25	28480	0698-6423
A2R89	0698-8696	5	1	RESISTOR 83.9K .1% .125W F TC=0+-25	28480	0698-8696
A2R90	0698-7850	1	1	RESISTOR 9.455K .1% .125W F TC=0+-25	19701	MF4C1/8-T9-9455R-B
A2R91	0698-8805	8	1	RESISTOR 10.35K .1% .125W F TC=0+-25	28480	0698-8805
A2R92	0699-1052	5	1	RESISTOR 146K .1% .125W F TC=0+-25	28480	0699-1052
A2R93	0757-0403	2		RESISTOR 121 1% .125W F TC=0+-100	24546	C4-1/8-T0-121R-F
A2R94	0698-5368	2	1	RESISTOR 3.74K .25% .125W F TC=0+-50	28480	0698-5368
A2R95	0757-0462	3		RESISTOR 75K 1% .125W F TC=0+-100	24546	C4-1/8-T0-7502-F
A2R96	0757-0462	3		RESISTOR 75K 1% .125W F TC=0+-100	24546	C4-1/8-T0-7502-F
A2R97	0698-6902	2	1	RESISTOR 34K .5% .125W F TC=0+-50	28480	0698-6902
A2R98	0698-3942	4	1	RESISTOR 69.8K .1% .125W F TC=0+-25	28480	0698-3942
A2R99	0698-8784	2		RESISTOR 19.6K .1% .125W F TC=0+-25	28480	0698-8784
A2R100	0698-0077	0	1	RESISTOR 93.1K 1% .125W F TC=0+-100	03888	PME55-1/8-T0-9312-F

See introduction to this section for ordering information
*Indicates factory selected value

Table 6-2. 4945A Replaceable Parts (Cont'd)

Reference Designation	HP Part Number	C D	Qty	Description	Mfr Code	Mfr Part Number
A2R101	0699-0775	7	1	RESISTOR 19.04K .1% .125W F TC=0+-25	28480	0699-0775
A2R102	0699-0588	0		RESISTOR 18.171K .1% .125W F TC=0+-25	28480	0699-0588
A2R103	0698-8858	1	2	RESISTOR 12.4K .1% .125W F TC=0+-25	28480	0698-8858
A2R104	0699-0587	9		RESISTOR 12.918K .1% .125W F TC=0+-25	28480	0699-0587
A2R105	0698-8858	1		RESISTOR 12.4K .1% .125W F TC=0+-25	28480	0698-8858
A2R106	0698-6444	7	1	RESISTOR 21.62K .1% .125W F TC=0+-25	28480	0698-6444
A2R107	0757-0199	3		RESISTOR 21.5K 1% .125W F TC=0+-100	24546	C4-1/8-T0-2152-F
A2R108	0757-0394	0	1	RESISTOR 51.1 1% .125W F TC=0+-100	24546	C4-1/8-T0-51R1-F
A2R109	0757-0403	2		RESISTOR 121 1% .125W F TC=0+-100	24546	C4-1/8-T0-121R-F
A2R110	0698-7318	6	1	RESISTOR 14.45K .25% .125W F TC=0+-50	19701	MF4C1/8-T2-14421-C
A2R111	0757-0403	2		RESISTOR 121 1% .125W F TC=0+-100	24546	C4-1/8-T0-121R-F
A2R112	0698-6935	1	1	RESISTOR 154K .5% .125W F TC=0+-50	28480	0698-6935
A2R113	0698-6477	6		RESISTOR 59.67K .25% .125W F TC=0+-50	28480	0698-6477
A2R114	0698-6917	9	1	RESISTOR 63.4K .5% .125W F TC=0+-50	28480	0698-6917
A2R115	0698-4308	8		RESISTOR 16.9K 1% .125W F TC=0+-100	24546	C4-1/8-T0-1692-F
A2R116	0698-6360	6		RESISTOR 10K .1% .125W F TC=0+-25	28480	0698-6360
A2R117	0698-6360	6		RESISTOR 10K .1% .125W F TC=0+-25	28480	0698-6360
A2R118	0698-6363	9	1	RESISTOR 40K .1% .125W F TC=0+-25	28480	0698-6363
A2R119	0698-6625	6	1	RESISTOR 6K .1% .125W F TC=0+-25	28480	0698-6625
A2R120	0698-6754	2	1	RESISTOR 44.2K .5% .125W F TC=0+-50	24546	NC4-1/8-T2-4422-D
A2R121	0698-4537	5	1	RESISTOR 357K 1% .125W F TC=0+-100	28480	0698-4537
A2R122	0698-6360	6		RESISTOR 10K .1% .125W F TC=0+-25	28480	0698-6360
A2R123	0698-4308	8		RESISTOR 16.9K 1% .125W F TC=0+-100	24546	C4-1/8-T0-1692-F
A2R124	0757-0401	0	1	RESISTOR 100 1% .125W F TC=0+-100	24546	C4-1/8-T0-101-F
A2R125	0757-0465	6	1	RESISTOR 100K 1% .125W F TC=0+-100	24546	C4-1/8-T0-1003-F
A2R126	0698-7934	2	1	RESISTOR 12.1K .1% .125W F TC=0+-25	19701	MF4C1/8-T9-1212-B
A2R127	0699-0517	5	1	RESISTOR 5.621K .1% .1W F TC=0+4	28480	0699-0517
A2R128	0699-0722	4	1	RESISTOR 23.7K .1% .125W F TC=0+-25	28480	0699-0722
A2R129	0757-0403	2		RESISTOR 121 1% .125W F TC=0+-100	24546	C4-1/8-T0-121R-F
A2R130	0757-0442	9		RESISTOR 10K 1% .125W F TC=0+-100	24546	C4-1/8-T0-1002-F
A2R131	2100-3103	6	2	RESISTOR-TRMR 10K 10% C SIDE-ADJ 17-TRN	02111	43P103
A2R132	2100-3103	6		RESISTOR-TRMR 10K 10% C SIDE-ADJ 17-TRN	02111	43P103
A2R133	2100-3056	8	3	RESISTOR-TRMR 5K 10% C SIDE-ADJ 17-TRN	02111	43P502
A2R134	2100-3056	8		RESISTOR-TRMR 5K 10% C SIDE-ADJ 17-TRN	02111	43P502
A2R135	2100-3056	8		RESISTOR-TRMR 5K 10% C SIDE-ADJ 17-TRN	02111	43P502
A2R605	1810-0275	1	1	NETWORK-RES 10-SIP1.0K OHM X 9	01121	210A102
A2TP1	1251-4670	2	1	CONNECTOR 3-PIN M POST TYPE	28480	1251-4670
A2TP205	1251-5619	1	1	CONNECTOR 4-PIN M POST TYPE	28480	1251-5619
A2TP305	1251-5618	0	1	CONNECTOR 8-PIN M POST TYPE	28480	1251-5618
A2U101	1826-0753	3	10	IC OP AMP LOW-BIAS-H-IMPD QUAD 14-DIP-C	04713	MC34004BL
A2U102	1826-0753	3		IC OP AMP LOW-BIAS-H-IMPD QUAD 14-DIP-C	04713	MC34004BL
A2U104	1826-0753	3		IC OP AMP LOW-BIAS-H-IMPD QUAD 14-DIP-C	04713	MC34004BL
A2U105	1826-0753	3		IC OP AMP LOW-BIAS-H-IMPD QUAD 14-DIP-C	04713	MC34004BL
A2U106	1826-0753	3		IC OP AMP LOW-BIAS-H-IMPD QUAD 14-DIP-C	04713	MC34004BL
A2U107	1826-0705	1	5	IC OP AMP LOW-BIAS-H-IMPD DUAL 8-DIP-C	01295	TL072ACJG
A2U306	1826-0915	9	2	IC OP AMP LOW-BIAS-H-IMPD 8-DIP-C PKG	01295	TL071ACJG (PER HP DWG)
A2U400	1826-0705	1		IC OP AMP LOW-BIAS-H-IMPD DUAL 8-DIP-C	01295	TL072ACJG
A2U401	1826-0753	3		IC OP AMP LOW-BIAS-H-IMPD QUAD 14-DIP-C	04713	MC34004BL
A2U402	1826-0753	3		IC OP AMP LOW-BIAS-H-IMPD QUAD 14-DIP-C	04713	MC34004BL
A2U403	1826-0915	9		IC OP AMP LOW-BIAS-H-IMPD 8-DIP-C PKG	01295	TL071ACJG (PER HP DWG)
A2U405	1820-1725	9	1	IC MULTIPLXR ANLG 16-DIP-P PKG	17856	DG508CJ
A2U406	1826-0740	8	3	IC SWITCH ANLG DUAL 16-DIP-C PKG	32293	IH5043CDE
A2U407	1826-0705	1		IC OP AMP LOW-BIAS-H-IMPD DUAL 8-DIP-C	01295	TL072ACJG
A2U504	1826-0735	1	1	IC OP AMP H-SLEW-RATE 8-DIP-P PKG	34371	HA3-2507-5
A2U604	1820-1199	1	1	IC INV TTL LS HEX 1-INP	01295	SN74LS04N
A2U606	1826-0785	1		IC OP AMP LOW-BIAS-H-IMPD DUAL 8-DIP-C	01295	TL072ACJG
A2U607	1826-0740	8		IC SWITCH ANLG DUAL 16-DIP-C PKG	32293	IH5043CDE
A2U700	1826-0705	1		IC OP AMP LOW-BIAS-H-IMPD DUAL 8-DIP-C	01295	TL072ACJG
A2U701	1826-0753	3		IC OP AMP LOW-BIAS-H-IMPD QUAD 14-DIP-C	04713	MC34004BL
A2U702	1826-0753	3		IC OP AMP LOW-BIAS-H-IMPD QUAD 14-DIP-C	04713	MC34004BL
A2U704	1820-1419	8	1	IC COMPTR TTL LS MAGTD 4-BIT	01295	SN74LS85N
A2U705	1820-1058	9	1	IC FF TTL LS D-TYPE OCTL	01295	SN74LS377N
A2U706	1826-0740	8		IC SWITCH ANLG DUAL 16-DIP-C PKG	32293	IH5043CDE
A2U707	1826-0753	3		IC OP AMP LOW-BIAS-H-IMPD QUAD 14-DIP-C	04713	MC34004BL
A2XU205	1200-0607	0	2	SOCKET-IC 16-CONT DIP DIP-SLDR	28480	1200-0607
A2XU505	1200-0607	0		SOCKET-IC 16-CONT DIP DIP-SLDR	28480	1200-0607
A2XU705	1200-0639	0	1	SOCKET-IC 20-CONT DIP DIP-SLDR	28480	1200-0639
	1480-0116	8	2	PIN-GRV .062-IN-DIA .25-IN-LG STL	28480	1480-0116
	5040-6067	2	2	EXTRACTOR PC	28480	5040-6067
	5080-8539	1	1	A2-ID LABEL	28480	5080-8539

See introduction to this section for ordering information
*Indicates factory selected value

Table 6-2. 4945A Replaceable Parts (Cont'd)

Reference Designation	HP Part Number	C D	Qty	Description	Mfr Code	Mfr Part Number
A3	04945-60003	6	1	NLD/MODEM	28480	04945-60003
A3C1	0160-5332	1	29	CAPACITOR-FXD .1UF +-20% 50VDC CER	28480	0160-5332
A3C2	0160-3508	9	3	CAPACITOR-FXD 1UF +80-20% 50VDC CER	28480	0160-3508
A3C3	0160-5332	1		CAPACITOR-FXD .1UF +-20% 50VDC CER	28480	0160-5332
A3C4	0160-5533	4	3	CAPACITOR-FXD .018UF +-1% 50VDC CER	28480	0160-5533
A3C5	0160-5332	1		CAPACITOR-FXD .1UF +-20% 50VDC CER	28480	0160-5332
A3C6	0160-5267	1	3	CAPACITOR-FXD 4700PF +-5% 50VDC CER	28480	0160-5267
A3C7	0160-5332	1		CAPACITOR-FXD .1UF +-20% 50VDC CER	28480	0160-5332
A3C8	0160-4953	0	2	CAPACITOR-FXD .027UF +-5% 50VDC CER	28480	0160-4953
A3C9	0160-5332	1		CAPACITOR-FXD .1UF +-20% 50VDC CER	28480	0160-5332
A3C10	0160-5332	1		CAPACITOR-FXD .1UF +-20% 50VDC CER	28480	0160-5332
A3C11	0180-0229	7	1	CAPACITOR-FXD 33UF+-10% 10VDC TA	56289	150D336X9010B2
A3C12	0180-1746	5	5	CAPACITOR-FXD 15UF+-10% 20VDC TA	56289	150D156X9020B2
A3C13	0160-5695	9	5	CAPACITOR-FXD .1UF +-1% 200VDC MET-POLYC	28480	0160-5695
A3C14	0160-5695	9		CAPACITOR-FXD .1UF +-1% 200VDC MET-POLYC	28480	0160-5695
A3C15	0160-5695	9		CAPACITOR-FXD .1UF +-1% 200VDC MET-POLYC	28480	0160-5695
A3C16	0160-0576	5	31	CAPACITOR-FXD .1UF +-20% 50VDC CER	28480	0160-0576
A3C17	0160-0576	5		CAPACITOR-FXD .1UF +-20% 50VDC CER	28480	0160-0576
A3C18	0160-5695	9		CAPACITOR-FXD .1UF +-1% 200VDC MET-POLYC	28480	0160-5695
A3C19	0160-0576	5		CAPACITOR-FXD .1UF +-20% 50VDC CER	28480	0160-0576
A3C20	0160-4696	8	1	CAPACITOR-FXD .010UF +-5% 50VDC	28480	0160-4696
A3C21	0160-0576	5		CAPACITOR-FXD .1UF +-20% 50VDC CER	28480	0160-0576
A3C22	0160-5695	9		CAPACITOR-FXD .1UF +-1% 200VDC MET-POLYC	28480	0160-5695
A3C23	0160-5332	1		CAPACITOR-FXD .1UF +-20% 50VDC CER	28480	0160-5332
A3C24	0160-5332	1		CAPACITOR-FXD .1UF +-20% 50VDC CER	28480	0160-5332
A3C25	0160-5658	4	2	CAPACITOR-FXD 1700PF +-1% 100VDC CER	28480	0160-5658
A3C26	0160-4810	8	2	CAPACITOR-FXD 330PF +-5% 100VDC CER	28480	0160-4810
A3C27	0160-4810	8		CAPACITOR-FXD 330PF +-5% 100VDC CER	28480	0160-4810
A3C28	0160-5658	4		CAPACITOR-FXD 1700PF +-1% 100VDC CER	28480	0160-5658
A3C29	0160-3508	9		CAPACITOR-FXD 1UF +80-20% 50VDC CER	28480	0160-3508
A3C30	0160-5332	1		CAPACITOR-FXD .1UF +-20% 50VDC CER	28480	0160-5332
A3C31	0160-5332	1		CAPACITOR-FXD .1UF +-20% 50VDC CER	28480	0160-5332
A3C32	0160-5533	4		CAPACITOR-FXD .018UF +-1% 50VDC CER	28480	0160-5533
A3C33	0160-5533	4		CAPACITOR-FXD .018UF +-1% 50VDC CER	28480	0160-5533
A3C34	0160-5771	2	1	CAPACITOR-FXD 8200TF +-5% CER MPO	28480	0160-5771
A3C35	0160-5267	1		CAPACITOR-FXD 4700PF +-5% 50VDC CER	28480	0160-5267
A3C36	0160-5332	1		CAPACITOR-FXD .1UF +-20% 50VDC CER	28480	0160-5332
A3C37	0160-5332	1		CAPACITOR-FXD .1UF +-20% 50VDC CER	28480	0160-5332
A3C38	0160-4370	5	1	CAPACITOR-FXD 1000PF +-5% 200VDC CER	51642	200-200-NP0-102J
A3C39	0160-0576	5		CAPACITOR-FXD .1UF +-20% 50VDC CER	28480	0160-0576
A3C40	0160-0576	5		CAPACITOR-FXD .1UF +-20% 50VDC CER	28480	0160-0576
A3C41	0160-4426	2	11	CAPACITOR-FXD .01UF +-1% 100VDC CER	28480	0160-4426
A3C42	0160-0576	5		CAPACITOR-FXD .1UF +-20% 50VDC CER	28480	0160-0576
A3C43	0160-0576	5		CAPACITOR-FXD .1UF +-20% 50VDC CER	28480	0160-0576
A3C44	0160-3508	9		CAPACITOR-FXD 1UF +80-20% 50VDC CER	28480	0160-3508
A3C45	0160-4567	2	3	CAPACITOR-FXD 3900PF +-1% 100VDC CER	28480	0160-4567
A3C46	0160-4426	2		CAPACITOR-FXD .01UF +-1% 100VDC CER	28480	0160-4426
A3C47	0160-0576	5		CAPACITOR-FXD .1UF +-20% 50VDC CER	28480	0160-0576
A3C48	0160-0576	5		CAPACITOR-FXD .1UF +-20% 50VDC CER	28480	0160-0576
A3C49	0160-0576	5		CAPACITOR-FXD .1UF +-20% 50VDC CER	28480	0160-0576
A3C50	0160-0576	5		CAPACITOR-FXD .1UF +-20% 50VDC CER	28480	0160-0576
A3C51	0160-0576	5		CAPACITOR-FXD .1UF +-20% 50VDC CER	28480	0160-0576
A3C52	0160-4426	2		CAPACITOR-FXD .01UF +-1% 100VDC CER	28480	0160-4426
A3C53	0160-4426	2		CAPACITOR-FXD .01UF +-1% 100VDC CER	28480	0160-4426
A3C54	0160-4426	2		CAPACITOR-FXD .01UF +-1% 100VDC CER	28480	0160-4426
A3C55	0160-0576	5		CAPACITOR-FXD .1UF +-20% 50VDC CER	28480	0160-0576
A3C56	0160-0576	5		CAPACITOR-FXD .1UF +-20% 50VDC CER	28480	0160-0576
A3C57	0160-5332	1		CAPACITOR-FXD .1UF +-20% 50VDC CER	28480	0160-5332
A3C58	0160-2265	3	1	CAPACITOR-FXD 22PF +-5% 500VDC CER 0+-30	28480	0160-2265
A3C59	0160-5332	1		CAPACITOR-FXD .1UF +-20% 50VDC CER	28480	0160-5332
A3C60	0160-5332	1		CAPACITOR-FXD .1UF +-20% 50VDC CER	28480	0160-5332
A3C61	0160-5332	1		CAPACITOR-FXD .1UF +-20% 50VDC CER	28480	0160-5332
A3C62	0160-5267	1		CAPACITOR-FXD 4700PF +-5% 50VDC CER	28480	0160-5267
A3C63	0160-4953	0		CAPACITOR-FXD .027UF +-5% 50VDC CER	28480	0160-4953
A3C64	0160-5332	1		CAPACITOR-FXD .1UF +-20% 50VDC CER	28480	0160-5332
A3C65	0160-5332	1		CAPACITOR-FXD .1UF +-20% 50VDC CER	28480	0160-5332
A3C66	0160-5332	1		CAPACITOR-FXD .1UF +-20% 50VDC CER	28480	0160-5332
A3C67	0160-0576	5		CAPACITOR-FXD .1UF +-20% 50VDC CER	28480	0160-0576
A3C68	0160-0576	5		CAPACITOR-FXD .1UF +-20% 50VDC CER	28480	0160-0576
A3C69	0160-4567	2		CAPACITOR-FXD 3900PF +-1% 100VDC CER	28480	0160-4567
A3C70	0160-0576	5		CAPACITOR-FXD .1UF +-20% 50VDC CER	28480	0160-0576

See introduction to this section for ordering information
*Indicates factory selected value

Table 6-2. 4945A Replaceable Parts (Cont'd)

Reference Designation	HP Part Number	C D	Qty	Description	Mfr Code	Mfr Part Number
A3C71	0160-4426	2		CAPACITOR-FXD .01UF +-1% 100VDC CER	28480	0160-4426
A3C72	0160-5332	1		CAPACITOR-FXD .1UF +-20% 50VDC CER	28480	0160-5332
A3C73	0160-5332	1		CAPACITOR-FXD .1UF +-20% 50VDC CER	28480	0160-5332
A3C74	0160-5332	1		CAPACITOR-FXD .1UF +-20% 50VDC CER	28480	0160-5332
A3C75	0160-5332	1		CAPACITOR-FXD .1UF +-20% 50VDC CER	28480	0160-5332
A3C76	0160-5332	1		CAPACITOR-FXD .1UF +-20% 50VDC CER	28480	0160-5332
A3C77	0180-1746	5		CAPACITOR-FXD 15UF+-10% 20VDC TA	56289	150D156X9020B2
A3C78	0160-5332	1		CAPACITOR-FXD .1UF +-20% 50VDC CER	28480	0160-5332
A3C79	0160-5332	1		CAPACITOR-FXD .1UF +-20% 50VDC CER	28480	0160-5332
A3C80	0180-1746	5		CAPACITOR-FXD 15UF+-10% 20VDC TA	56289	150D156X9020B2
A3C81	0180-1746	5		CAPACITOR-FXD 15UF+-10% 20VDC TA	56289	150D156X9020B2
A3C82	0160-5332	1		CAPACITOR-FXD .1UF +-20% 50VDC CER	28480	0160-5332
A3C83	0160-0576	5		CAPACITOR-FXD .1UF +-20% 50VDC CER	28480	0160-0576
A3C84	0160-4426	2		CAPACITOR-FXD .01UF +-1% 100VDC CER	28480	0160-4426
A3C85	0160-0576	5		CAPACITOR-FXD .1UF +-20% 50VDC CER	28480	0160-0576
A3C86	0160-4426	2		CAPACITOR-FXD .01UF +-1% 100VDC CER	28480	0160-4426
A3C87	0160-4426	2		CAPACITOR-FXD .01UF +-1% 100VDC CER	28480	0160-4426
A3C88	0160-0576	5		CAPACITOR-FXD .1UF +-20% 50VDC CER	28480	0160-0576
A3C89	0160-0576	5		CAPACITOR-FXD .1UF +-20% 50VDC CER	28480	0160-0576
A3C90	0160-0576	5		CAPACITOR-FXD .1UF +-20% 50VDC CER	28480	0160-0576
A3C91	0160-4426	2		CAPACITOR-FXD .01UF +-1% 100VDC CER	28480	0160-4426
A3C92	0160-0576	5		CAPACITOR-FXD .1UF +-20% 50VDC CER	28480	0160-0576
A3C93	0160-0576	5		CAPACITOR-FXD .1UF +-20% 50VDC CER	28480	0160-0576
A3C94	0160-0576	5		CAPACITOR-FXD .1UF +-20% 50VDC CER	28480	0160-0576
A3C95	0160-0576	5		CAPACITOR-FXD .1UF +-20% 50VDC CER	28480	0160-0576
A3C96	0160-0576	5		CAPACITOR-FXD .1UF +-20% 50VDC CER	28480	0160-0576
A3C97	0160-0576	5		CAPACITOR-FXD .1UF +-20% 50VDC CER	28480	0160-0576
A3C98	0160-0576	5		CAPACITOR-FXD .1UF +-20% 50VDC CER	28480	0160-0576
A3C99	0160-4567	2		CAPACITOR-FXD 3900PF +-1% 100VDC CER	28480	0160-4567
A3C100	0160-4426	2		CAPACITOR-FXD .01UF +-1% 100VDC CER	28480	0160-4426
A3C101	0160-0576	5		CAPACITOR-FXD .1UF +-20% 50VDC CER	28480	0160-0576
A3C102	0160-5332	1		CAPACITOR-FXD .1UF +-20% 50VDC CER	28480	0160-5332
A3C103	0180-1746	5		CAPACITOR-FXD 15UF+-10% 20VDC TA	56289	150D156X9020B2
A3C104	0160-5332	1		CAPACITOR-FXD .1UF +-20% 50VDC CER	28480	0160-5332
A3CR1	1901-0040	1	2	DIODE-SWITCHING 30V 50MA 2NS DO-35	28480	1901-0040
A3CR2	1901-0040	1		DIODE-SWITCHING 30V 50MA 2NS DO-35	28480	1901-0040
A3P1	1251-7986	9		CONN-POST TYPE .100-PIN-SPCG 50-CONT	28480	1251-7986
A3Q1	1854-0215	1	2	TRANSISTOR NPN SI PD=350MW FT=300MHZ	04713	2N3904
A3Q2	1854-0215	1		TRANSISTOR NPN SI PD=350MW FT=300MHZ	04713	2N3904
A3R1	0698-3260	9	2	RESISTOR 464K 1% .125W F TC=0+-100	28480	0698-3260
A3R2	0698-8530	6	1	RESISTOR 64.9K .1% .125W F TC=0+-25	28480	0698-8530
A3R3	0698-8958	2	3	RESISTOR 511K 1% .125W F TC=0+-100	28480	0698-8958
A3R4	0757-0447	4	1	RESISTOR 16.2K 1% .125W F TC=0+-100	24546	C4-1/8-T0-1622-F
A3R5	0757-0464	5	1	RESISTOR 90.9K 1% .125W F TC=0+-100	24546	C4-1/8-T0-9092-F
A3R6	0757-0289	2	1	RESISTOR 13.3K 1% .125W F TC=0+-100	19701	MF4C1/8-T0-1332-F
A3R7	0698-0083	8	5	RESISTOR 1.96K 1% .125W F TC=0+-100	24546	C4-1/8-T0-1961-F
A3R8	0698-0083	8		RESISTOR 1.96K 1% .125W F TC=0+-100	24546	C4-1/8-T0-1961-F
A3R9	2100-3056	8	1	RESISTOR-TRMR 5K 10% C SIDE-ADJ 17-TRN	02111	43P502
A3R10	2100-3123	0	2	RESISTOR-TRMR 500 10% C SIDE-ADJ 17-TRN	02111	43P501
A3R11	0698-6960	2	1	RESISTOR 27K .1% .125W F TC=0+-50	28480	0698-6960
A3R12	2100-3154	7	2	RESISTOR-TRMR 1K 10% C SIDE-ADJ 17-TRN	02111	43P102
A3R13	0698-7143	5	1	RESISTOR 19.3K .1% .125W F TC=0+-25	28480	0698-7143
A3R14	0698-6624	5	8	RESISTOR 2K .1% .125W F TC=0+-25	28480	0698-6624
A3R15	0698-5470	7	1	RESISTOR 111K 1% .125W F TC=0+-100	24546	C4-1/8-T0-1113-F
A3R16	0698-6348	0	5	RESISTOR 3K .1% .125W F TC=0+-25	28480	0698-6348
A3R17	0698-4534	2	1	RESISTOR 309K 1% .125W F TC=0+-100	28480	0698-4534
A3R18	0698-6348	0		RESISTOR 3K .1% .125W F TC=0+-25	28480	0698-6348
A3R19	0698-6513	1	1	RESISTOR 11.547K .1% .125W F TC=0+-50	28480	0698-6513
A3R20	0698-6624	5		RESISTOR 2K .1% .125W F TC=0+-25	28480	0698-6624
A3R21	0698-6103	5	1	RESISTOR 1.6K .1% .125W F TC=0+-50	28480	0698-6103
A3R22	2100-3123	0		RESISTOR-TRMR 500 10% C SIDE-ADJ 17-TRN	02111	43P501
A3R23	0698-7343	7	1	RESISTOR 78.7K .5% .125W F TC=0+-50	19701	MF4C1/8-T0-7072-D
A3R24	0698-6378	6	1	RESISTOR 14.9K .1% .125W F TC=0+-50	28480	0698-6378
A3R25	0698-4522	8	1	RESISTOR 165K 1% .125W F TC=0+-100	24546	C4-1/8-T0-1653-F
A3R26	0698-6887	4	1	RESISTOR 22.1K .5% .125W F TC=0+-50	28480	0698-6887
A3R27	0698-6624	5		RESISTOR 2K .1% .125W F TC=0+-25	28480	0698-6624
A3R28	0698-8780	8	1	RESISTOR 24.9K .1% .125W F TC=0+-25	28480	0698-8780
A3R29	0698-6624	5		RESISTOR 2K .1% .125W F TC=0+-25	28480	0698-6624
A3R30	0698-7339	1	1	RESISTOR 72K .25% .125W F TC=0+-50	19701	MF4C1/8-T2-7202-C
A3R31	0698-6423	2	3	RESISTOR 31.25K .1% .125W F TC=0+-25	28480	0698-6423
A3R32	2100-3154	7		RESISTOR-TRMR 1K 10% C SIDE-ADJ 17-TRN	02111	43P102
A3R33	0698-0083	8		RESISTOR 1.96K 1% .125W F TC=0+-100	24546	C4-1/8-T0-1961-F
A3R34	0757-0470	3	4	RESISTOR 162K 1% .125W F TC=0+-100	24546	C4-1/8-T0-1623-F
A3R35	0757-0470	3		RESISTOR 162K 1% .125W F TC=0+-100	24546	C4-1/8-T0-1623-F

See introduction to this section for ordering information
*Indicates factory selected value

Table 6-2. 4945A Replaceable Parts (Cont'd)

Reference Designation	HP Part Number	C D	Qty	Description	Mfr Code	Mfr Part Number
A3R36	0757-0394	0	1	RESISTOR 51.1 1% .125W F TC=0+-100	24546	C4-1/8-T0-51R1-F
A3R37	0698-3446	3	1	RESISTOR 383 1% .125W F TC=0+-100	24546	C4-1/8-T0-383R-F
A3R38	0698-3260	9		RESISTOR 464K 1% .125W F TC=0+-100	28480	0698-3260
A3R39	0757-0470	3		RESISTOR 162K 1% .125W F TC=0+-100	24546	C4-1/8-T0-1623-F
A3R40	0757-0470	3		RESISTOR 162K 1% .125W F TC=0+-100	24546	C4-1/8-T0-1623-F
A3R41	0698-6248	9	1	RESISTOR 400K 1% .125W F TC=0+-100	28480	0698-6248
A3R42	0699-0647	2	1	RESISTOR 40.11K .1% .125W F TC=0+-25	28480	0699-0647
A3R43	0698-0083	8		RESISTOR 1.96K 1% .125W F TC=0+-100	24546	C4-1/8-T0-1961-F
A3R44	0698-0092	9	1	RESISTOR 2.61K 1% .125W F TC=0+-25	03888	PME55-1/8-T0-2611-F
A3R45	0698-3453	2	1	RESISTOR 196K 1% .125W F TC=0+-100	24546	C4-1/8-T0-1963-F
A3R46	0698-6353	7	4	RESISTOR 50K .1% .125W F TC=0+-25	28480	0698-6353
A3R47	0698-6353	7		RESISTOR 50K .1% .125W F TC=0+-25	28480	0698-6353
A3R48	0698-6624	5		RESISTOR 2K .1% .125W F TC=0+-25	28480	0698-6624
A3R49	0699-0721	3	1	RESISTOR 33K .1% .125W F TC=0+-25	28480	0699-0721
A3R50	0698-7318	6	1	RESISTOR 14.45K .25% .125W F TC=0+-50	19701	MF4C1/8-T2-14421-C
A3R51	0698-6624	5		RESISTOR 2K .1% .125W F TC=0+-25	28480	0698-6624
A3R52	0698-6895	2	1	RESISTOR 27.7K .5% .125W F TC=0+-50	28480	0698-6895
A3R53	0698-6360	6	11	RESISTOR 10K .1% .125W F TC=0+-25	28480	0698-6360
A3R54	0698-6360	6		RESISTOR 10K .1% .125W F TC=0+-25	28480	0698-6360
A3R55	0698-6348	0		RESISTOR 3K .1% .125W F TC=0+-25	28480	0698-6348
A3R56	0698-0063	4	1	RESISTOR 5.23K 1% .125W F TC=0+-100	91637	CMF-1/8-T1-5231-F
A3R57	0699-0248	9	1	RESISTOR 387K .5% .125W F TC=0+-50	28480	0699-0248
A3R58	0698-6894	1	1	RESISTOR 27.1K .5% .125W F TC=0+-50	28480	0698-6894
A3R59	0698-6360	6		RESISTOR 10K .1% .125W F TC=0+-25	28480	0698-6360
A3R60	0698-8641	0	1	RESISTOR 47.5K .1% .125W F TC=0+-25	28480	0698-8641
A3R61	0698-8167	5	1	RESISTOR 10K .1% .125W F TC=0+-25	19701	MF4C1/8-T9-1002-B
A3R62	0698-6360	6		RESISTOR 10K .1% .125W F TC=0+-25	28480	0698-6360
A3R63	0698-6887	2	1	RESISTOR 20.8K .5% .125W F TC=0+-50	28480	0698-6887
A3R64	0698-3382	6	1	RESISTOR 5.49K 1% .125W F TC=0+-100	24546	C4-1/8-T0-5491-F
A3R65	0698-6348	0		RESISTOR 3K .1% .125W F TC=0+-25	28480	0698-6348
A3R66	0698-6348	0		RESISTOR 3K .1% .125W F TC=0+-25	28480	0698-6348
A3R67	0699-0633	6	1	RESISTOR 2.475K .1% .125W F TC=0+-25	28480	0699-0633
A3R68	0698-6360	6		RESISTOR 10K .1% .125W F TC=0+-25	28480	0698-6360
A3R69	0698-6360	6		RESISTOR 10K .1% .125W F TC=0+-25	28480	0698-6360
A3R70	0698-6363	9	1	RESISTOR 40K .1% .125W F TC=0+-25	28480	0698-6363
A3R71	0699-0597	1	1	RESISTOR 2.26K .1% .125W F TC=0+-25	28480	0699-0597
A3R72	0698-6914	6	1	RESISTOR 55.6K .5% .125W F TC=0+-50	28480	0698-6914
A3R73	0698-4519	3	1	RESISTOR 140K 1% .125W F TC=0+-100	24546	C4-1/8-T0-1403-F
A3R74	0698-6358	2	4	RESISTOR 100K .1% .125W F TC=0+-25	28480	0698-6358
A3R75	0698-8958	2		RESISTOR 511K 1% .125W F TC=0+-100	28480	0698-8958
A3R76	0698-0083	8		RESISTOR 1.96K 1% .125W F TC=0+-100	24546	C4-1/8-T0-1961-F
A3R77	0698-8958	2		RESISTOR 511K 1% .125W F TC=0+-100	28480	0698-8958
A3R78	0698-6630	3	1	RESISTOR 20K .1% .125W F TC=0+-25	28480	0698-6630
A3R79	0698-6671	2	1	RESISTOR 7K .25% .125W F TC=0+-25	28480	0698-6671
A3R80	0698-6353	7		RESISTOR 50K .1% .125W F TC=0+-25	28480	0698-6353
A3R81	0698-6353	7		RESISTOR 50K .1% .125W F TC=0+-25	28480	0698-6353
A3R82	0698-6624	5		RESISTOR 2K .1% .125W F TC=0+-25	28480	0698-6624
A3R83	0698-8854	7	1	RESISTOR 17.17K .1% .125W F TC=0+-25	28480	0698-8854
A3R84	0699-0768	8	1	RESISTOR 22.6K .1% .125W F TC=0+-25	28480	0699-0768
A3R85	0698-8803	6	1	RESISTOR 5.9K .1% .125W F TC=0+-25	28480	0698-8803
A3R86	0698-6627	8	1	RESISTOR 25K .1% .125W F TC=0+-25	28480	0698-6627
A3R87	0699-0626	7	1	RESISTOR 3.056K .1% .125W F TC=0+-25	28480	0699-0626
A3R88	0698-6624	5		RESISTOR 2K .1% .125W F TC=0+-25	28480	0698-6624
A3R89	0757-0403	2	5	RESISTOR 121 1% .125W F TC=0+-100	24546	C4-1/8-T0-121R-F
A3R90	0698-6358	2		RESISTOR 100K .1% .125W F TC=0+-25	28480	0698-6358
A3R91	0698-6358	2		RESISTOR 100K .1% .125W F TC=0+-25	28480	0698-6358
A3R92	0698-6358	2		RESISTOR 100K .1% .125W F TC=0+-25	28480	0698-6358
A3R93	0757-0403	2		RESISTOR 121 1% .125W F TC=0+-100	24546	C4-1/8-T0-121R-F
A3R94	0698-7842	1	1	RESISTOR 26.1K .1% .125W F TC=0+-25	19701	MF4C1/8-T9-2612-B
A3R95	0699-0766	6	1	RESISTOR 21.3K .1% .125W F TC=0+-25	28480	0699-0766
A3R96	0698-8724	0	1	RESISTOR 16.06K .25% .125W F TC=0+-50	28480	0698-8724
A3R97	0698-6629	0	3	RESISTOR 60K .1% .125W F TC=0+-25	28480	0698-6629
A3R98	0698-6629	0		RESISTOR 60K .1% .125W F TC=0+-25	28480	0698-6629
A3R99	0698-8012	9	2	RESISTOR 30.8K .5% .125W F TC=0+-50	19701	MF4C1/8-T2-3802-D
A3R100	0698-8012	9		RESISTOR 30.8K .5% .125W F TC=0+-50	19701	MF4C1/8-T2-3802-D
A3R101	0698-6360	6		RESISTOR 10K .1% .125W F TC=0+-25	28480	0698-6360
A3R102	0698-6360	6		RESISTOR 10K .1% .125W F TC=0+-25	28480	0698-6360
A3R103	0698-6360	6		RESISTOR 10K .1% .125W F TC=0+-25	28480	0698-6360
A3R104	0757-0403	2		RESISTOR 121 1% .125W F TC=0+-100	24546	C4-1/8-T0-121R-F
A3R105	0698-7322	2	1	RESISTOR 4.25K .25% .125W F TC=0+-25	19701	MF4C1/8-T9-4251-C
A3R106	0698-8336	0	1	RESISTOR 3.55K .1% .125W F TC=0+-50	19701	MF4C1/8-T2-3551-B
A3R107	0698-6423	2		RESISTOR 31.25K .1% .125W F TC=0+-25	28480	0698-6423
A3R108	0698-6629	0		RESISTOR 60K .1% .125W F TC=0+-25	28480	0698-6629
A3R109	0757-0403	2		RESISTOR 121 1% .125W F TC=0+-100	24546	C4-1/8-T0-121R-F
A3R110	0698-6362	8	1	RESISTOR 1K .1% .125W F TC=0+-25	28480	0698-6362

See introduction to this section for ordering information
*Indicates factory selected value

Table 6-2. 4945A Replaceable Parts (Cont'd)

Reference Designation	HP Part Number	C D	Qty	Description	Mfr Code	Mfr Part Number
A3R111	0698-6344	6	1	RESISTOR 900 .1% .125W F TC=0+-25	28480	0698-6344
A3R112	0757-0403	2		RESISTOR 121 1% .125W F TC=0+-100	24546	C4-1/8-T0-121R-F
A3R113	0698-6423	2		RESISTOR 31.25K .1% .125W F TC=0+-25	28480	0698-6423
A3R114	0699-0672	3	1	RESISTOR 9.214K .1% .125W F TC=0+-25	28480	0699-0672
A3R115	0698-6343	5	1	RESISTOR 9K .1% .125W F TC=0+-25	28480	0698-6343
A3R116	0757-0442	9		RESJ	28480	0757-0442
A3R117	0698-6360	6		RESISTOR 10K .1% .125W F TC=0+-25	28480	0698-6360
A3R118	0698-3455	4	1	RESISTOR 261K 1% .125W F TC=0+-100	24546	C4-1/8-T0-2613-F
A3R119	0757-0442	9		RESISTOR 10K 1% .125W F TC=0±100	28480	0757-0442
A3R702	1810-0231	9	1	NETWORK-RES 8-SIP 2.2K OHM X 7	01121	208A222
A3TP1	0360-1682	0	6	TERMINAL-STUD SGL-TUR PRESS-MTG	28480	0360-1682
A3TP2	0360-1682	0		TERMINAL-STUD SGL-TUR PRESS-MTG	28480	0360-1682
A3TP3	0360-1682	0		TERMINAL-STUD SGL-TUR PRESS-MTG	28480	0360-1682
A3TP4	0360-1682	0		TERMINAL-STUD SGL-TUR PRESS-MTG	28480	0360-1682
A3TP5	0360-1682	0		TERMINAL-STUD SGL-TUR PRESS-MTG	28480	0360-1682
A3TP6	0360-1682	0		TERMINAL-STUD SGL-TUR PRESS-MTG	28480	0360-1682
A3U100	1826-1002	7	3	IC PL LOOP 14-DIP-P PKG	28480	1826-1002
A3U101	1826-0219	6	1	IC PL LOOP 8-DIP-P PKG	18324	NE567V
A3U105	1826-0753	3	7	IC OP AMP LOW-BIAS-H-IMPD QUAD 14-DIP-C	04713	MC34004BL
A3U107	1826-0753	3		IC OP AMP LOW-BIAS-H-IMPD QUAD 14-DIP-C	04713	MC34004BL
A3U201	1826-0785	1	4	IC OP AMP LOW-BIAS-H-IMPD DUAL 8-DIP-C	01295	TL072ACJG
A3U204	1826-0753	3		IC OP AMP LOW-BIAS-H-IMPD QUAD 14-DIP-C	04713	MC34004BL
A3U208	1826-0753	3		IC OP AMP LOW-BIAS-H-IMPD QUAD 14-DIP-C	04713	MC34004BL
A3U300	1826-0785	1		IC OP AMP LOW-BIAS-H-IMPD DUAL 8-DIP-C	01295	TL072ACJG
A3U302	1826-1002	7		IC PL LOOP 14-DIP-P PKG	28480	1826-1002
A3U306	1826-0753	3		IC OP AMP LOW-BIAS-H-IMPD QUAD 14-DIP-C	04713	MC34004BL
A3U400	1820-1977	3	1	IC OSC ECL	04713	MC12061P
A3U402	1826-1002	7		IC PL LOOP 14-DIP-P PKG	28480	1826-1002
A3U404	1826-0740	8	4	IC SWITCH ANLG DUAL 16-DIP-C PKG	32293	IH5043CDE
A3U405	1826-0785	1		IC OP AMP LOW-BIAS-H-IMPD DUAL 8-DIP-C	01295	TL072ACJG
A3U406	1826-0740	8		IC SWITCH ANLG DUAL 16-DIP-C PKG	32293	IH5043CDE
A3U408	1826-0753	3		IC OP AMP LOW-BIAS-H-IMPD QUAD 14-DIP-C	04713	MC34004BL
A3U500	1820-1432	5	2	IC CNTR TTL LS BIN SYNCHRO POS-EDGE-TRIG	01295	SN74LS163AN
A3U501	1820-1197	9	2	IC GATE TTL LS NAND QUAD 2-INP	01295	SN74LS00N
A3U502	1820-2096	9	1	IC CNTR TTL LS BIN DUAL 4-BIT	01295	SN74LS393N
A3U504	1826-0785	1		IC OP AMP LOW-BIAS-H-IMPD DUAL 8-DIP-C	01295	TL072ACJG
A3U505	1826-0753	3		IC OP AMP LOW-BIAS-H-IMPD QUAD 14-DIP-C	04713	MC34004BL
A3U600	1820-1432	5		IC CNTR TTL LS BIN SYNCHRO POS-EDGE-TRIG	01295	SN74LS163AN
A3U601	1820-1199	1	1	IC INV TTL LS HEX 1-INP	01295	SN74LS04N
A3U607	1826-0667	8	1	IC OP AMP LOW-BIAS-H-IMPD 8-DIP-P PKG	27014	LF351N
A3U608	1826-0740	8		IC SWITCH ANLG DUAL 16-DIP-C PKG	32293	IH5043CDE
A3U700	1820-1491	6	1	IC BFR TTL LS NON-INV HEX 1-INP	01295	SN74LS367AN
A3U702	1820-1197	9		IC GATE TTL LS NAND QUAD 2-INP	01295	SN74LS00N
A3U705	1826-0740	8		IC SWITCH ANLG DUAL 16-DIP-C PKG	32293	IH5043CDE
A3U800	1820-1419	8	1	IC COMPTR TTL LS MAGTD 4-BIT	01295	SN74LS85N
A3U803	1820-1858	9	1	IC FF TTL LS D-TYPE CCTL	01295	SN74LS377N
A3VR1	1990-0449	1	1	OPTO-ISOLATOR LED-PCNDCT IF=50MA-MAX	03911	CLM8000
A3XU802	1200-0607	0	1	SOCKET-IC 16-CONT DIP DIP-SLDR	28480	1200-0607
A3XU803	1200-0639	8	1	SOCKET-IC 20-CONT DIP DIP-SLDR	28480	1200-0639
A3Y1	0410-1400	7	1	CRYSTAL-QUARTZ 8.015MHZ HC-18/U-HLDR	28480	0410-1400
	1251-7986	9	2	CONN-POST TYPE .100-PIN-SPCG 50-CONT	28480	1251-7986
	1480-0116	8	1	PIN-GRV .062-IN-DIA .25-IN-LG STL	28480	1480-0116
	4040-0747	2	1	EXTR-PC BD GRA POLYC .062-BD-THKNS	28480	4040-0747
	5080-8540	4	1	A3-ID LABEL	28480	5080-8540
	04945-20003	1	1	NLD/MODEM BD BLK	28480	04945-20003

See introduction to this section for ordering information
*Indicates factory selected value

Table 6-2. 4945A Replaceable Parts (Cont'd)

Reference Designation	HP Part Number	CD	Qty	Description	Mfr Code	Mfr Part Number
A4	04945-60004	6	1	AUTORANGE AMP	28480	04945-60004
A4C1	0160-4786	7	1	CAPACITOR-FXD 27PF +-5% 100VDC CER 0+-30	28480	0160-4786
A4C2	0160-5298	8	56	CAPACITOR-FXD .01UF +-20% 100VDC CER	28480	0160-5298
A4C3	0160-5298	8		CAPACITOR-FXD .01UF +-20% 100VDC CER	28480	0160-5298
A4C4	0160-5298	8		CAPACITOR-FXD .01UF +-20% 100VDC CER	28480	0160-5298
A4C5	0160-5298	8		CAPACITOR-FXD .01UF +-20% 100VDC CER	28480	0160-5298
A4C6	0160-3291	7	2	CAPACITOR-FXD 1200PF +-1% 100VDC MICA	28480	0160-3291
A4C7	0160-0340	1	1	CAPACITOR-FXD 600PF +-1% 300VDC MICA	28480	0160-0340
A4C8	0160-5298	8		CAPACITOR-FXD .01UF +-20% 100VDC CER	28480	0160-5298
A4C9	0160-5298	8		CAPACITOR-FXD .01UF +-20% 100VDC CER	28480	0160-5298
A4C10	0160-5298	8		CAPACITOR-FXD .01UF +-20% 100VDC CER	28480	0160-5298
A4C11	0160-5298	8		CAPACITOR-FXD .01UF +-20% 100VDC CER	28480	0160-5298
A4C12	0160-5298	8		CAPACITOR-FXD .01UF +-20% 100VDC CER	28480	0160-5298
A4C13	0160-5298	8		CAPACITOR-FXD .01UF +-20% 100VDC CER	28480	0160-5298
A4C14	0160-5298	8		CAPACITOR-FXD .01UF +-20% 100VDC CER	28480	0160-5298
A4C15	0160-5298	8		CAPACITOR-FXD .01UF +-20% 100VDC CER	28480	0160-5298
A4C16	0160-5298	8		CAPACITOR-FXD .01UF +-20% 100VDC CER	28480	0160-5298
A4C17	0140-0221	5	1	CAPACITOR-FXD 220PF +-1% 300VDC MICA	72136	DM15F221F0300WV1C
A4C18	0160-4136	1	1	CAPACITOR-FXD 3300PF +-1% 500VDC MICA	28480	0160-4136
A4C19	0160-5298	8		CAPACITOR-FXD .01UF +-20% 100VDC CER	28480	0160-5298
A4C20	0160-5298	8		CAPACITOR-FXD .01UF +-20% 100VDC CER	28480	0160-5298
A4C21	0160-5298	8		CAPACITOR-FXD .01UF +-20% 100VDC CER	28480	0160-5298
A4C22	0160-5298	8		CAPACITOR-FXD .01UF +-20% 100VDC CER	28480	0160-5298
A4C23	0160-5298	8		CAPACITOR-FXD .01UF +-20% 100VDC CER	28480	0160-5298
A4C24	0160-5298	8		CAPACITOR-FXD .01UF +-20% 100VDC CER	28480	0160-5298
A4C25	0160-0128	3	2	CAPACITOR-FXD 2.2UF +-20% 50VDC CER	28480	0160-0128
A4C26	0160-3482	8	1	CAPACITOR-FXD 430PF +-1% 300VDC MICA	28480	0160-3482
A4C27	0140-0177	0	1	CAPACITOR-FXD 400PF +-1% 300VDC MICA	72136	DM15F401F0300WV1CR
A4C28	0160-5298	8		CAPACITOR-FXD .01UF +-20% 100VDC CER	28480	0160-5298
A4C29	0160-5298	8		CAPACITOR-FXD .01UF +-20% 100VDC CER	28480	0160-5298
A4C30	0160-5298	8		CAPACITOR-FXD .01UF +-20% 100VDC CER	28480	0160-5298
A4C31	0160-5298	8		CAPACITOR-FXD .01UF +-20% 100VDC CER	28480	0160-5298
A4C32	0160-5298	8		CAPACITOR-FXD .01UF +-20% 100VDC CER	28480	0160-5298
A4C33	0160-5298	8		CAPACITOR-FXD .01UF +-20% 100VDC CER	28480	0160-5298
A4C34	0160-5298	8		CAPACITOR-FXD .01UF +-20% 100VDC CER	28480	0160-5298
A4C35	0160-5298	8		CAPACITOR-FXD .01UF +-20% 100VDC CER	28480	0160-5298
A4C36	0160-5298	8		CAPACITOR-FXD .01UF +-20% 100VDC CER	28480	0160-5298
A4C37	0160-5298	8		CAPACITOR-FXD .01UF +-20% 100VDC CER	28480	0160-5298
A4C38	0160-5298	8		CAPACITOR-FXD .01UF +-20% 100VDC CER	28480	0160-5298
A4C39	0160-5298	8		CAPACITOR-FXD .01UF +-20% 100VDC CER	28480	0160-5298
A4C40	0160-5298	8		CAPACITOR-FXD .01UF +-20% 100VDC CER	28480	0160-5298
A4C41	0160-5298	8		CAPACITOR-FXD .01UF +-20% 100VDC CER	28480	0160-5298
A4C42	0160-0128	3		CAPACITOR-FXD 2.2UF +-20% 50VDC CER	28480	0160-0128
A4C43	0160-5298	8		CAPACITOR-FXD .01UF +-20% 100VDC CER	28480	0160-5298
A4C44	0160-5298	8		CAPACITOR-FXD .01UF +-20% 100VDC CER	28480	0160-5298
A4C45	0160-5298	8		CAPACITOR-FXD .01UF +-20% 100VDC CER	28480	0160-5298
A4C46	0160-5298	8		CAPACITOR-FXD .01UF +-20% 100VDC CER	28480	0160-5298
A4C47	0160-5298	8		CAPACITOR-FXD .01UF +-20% 100VDC CER	28480	0160-5298
A4C48	0160-5298	8		CAPACITOR-FXD .01UF +-20% 100VDC CER	28480	0160-5298
A4C49	0160-5298	8		CAPACITOR-FXD .01UF +-20% 100VDC CER	28480	0160-5298
A4C50	0160-5298	8		CAPACITOR-FXD .01UF +-20% 100VDC CER	28480	0160-5298
A4C51	0160-5298	8		CAPACITOR-FXD .01UF +-20% 100VDC CER	28480	0160-5298
A4C52	0160-5298	8		CAPACITOR-FXD .01UF +-20% 100VDC CER	28480	0160-5298
A4C53	0160-5298	8		CAPACITOR-FXD .01UF +-20% 100VDC CER	28480	0160-5298
A4C54	0160-5298	8		CAPACITOR-FXD .01UF +-20% 100VDC CER	28480	0160-5298
A4C55	0160-5298	8		CAPACITOR-FXD .01UF +-20% 100VDC CER	28480	0160-5298
A4C56	0160-5298	8		CAPACITOR-FXD .01UF +-20% 100VDC CER	28480	0160-5298
A4C57	0160-4426	2	2	CAPACITOR-FXD .01UF +-1% 100VDC CER	28480	0160-4426
A4C58	0160-5298	8		CAPACITOR-FXD .01UF +-20% 100VDC CER	28480	0160-5298
A4C59	0160-5298	8		CAPACITOR-FXD .01UF +-20% 100VDC CER	28480	0160-5298
A4C60	0160-5298	8		CAPACITOR-FXD .01UF +-20% 100VDC CER	28480	0160-5298
A4C61	0160-5298	8		CAPACITOR-FXD .01UF +-20% 100VDC CER	28480	0160-5298
A4C62	0160-5298	8		CAPACITOR-FXD .01UF +-20% 100VDC CER	28480	0160-5298
A4C63	0160-5298	8		CAPACITOR-FXD .01UF +-20% 100VDC CER	28480	0160-5298
A4C64	0160-5298	0		CAPACITOR-FXD .01UF +-20% 100VDC CER	28480	0160-5298
A4C65	0180-2249	5	2	CAPACITOR-FXD 47UF+-10% 20VDC TA	56289	150D476X9020B2
A4C66	0160-4426	2		CAPACITOR-FXD .01UF +-1% 100VDC CER	28480	0160-4426
A4C67	0160-3291	7		CAPACITOR-FXD 1200PF +-1% 100VDC MICA	28480	0160-3291
A4C68	0160-5533	4	1	CAPACITOR-FXD .018UF +-1% 50VDC CER	28480	0160-5533
A4C69	0160-5298	8		CAPACITOR-FXD .01UF +-20% 100VDC CER	28480	0160-5298
A4C70	0160-5298	8		CAPACITOR-FXD .01UF +-20% 100VDC CER	28480	0160-5298

See introduction to this section for ordering information
*Indicates factory selected value

Table 6-2. 4945A Replaceable Parts (Cont'd)

Reference Designation	HP Part Number	C D	Qty	Description	Mfr Code	Mfr Part Number
A4C71	0180-0374	3	3	CAPACITOR-FXD 10UF+-10% 20VDC TA	56289	150D106X902002
A4C72	0180-0374	3		CAPACITOR-FXD 10UF+-10% 20VDC TA	56289	150D106X9020R2
A4C73	0180-0374	3		CAPACITOR-FXD 10UF+-10% 20VDC TA	56289	150D106X902002
A4C74	0180-2249	5		CAPACITOR-FXD 47UF+-10% 20VDC TA	56289	150D476X9020R2
A4CR1	1901-0518	8	1	DIODE-SM SIG SCHOTTKY	28480	1901-0518
A4CR2	1901-0050	3	6	DIODE-SWITCHING 80V 200MA 2NS DO-35	28480	1901-0050
A4CR3	1901-0050	3		DIODE-SWITCHING 80V 200MA 2NS DO-35	28480	1901-0050
A4CR4	1901-0050	3		DIODE-SWITCHING 80V 200MA 2NS DO-35	28480	1901-0050
A4CR5	1901-0050	3		DIODE-SWITCHING 80V 200MA 2NS DO-35	28480	1901-0050
A4CR6	1901-0050	3		DIODE-SWITCHING 80V 200MA 2NS DO-35	28480	1901-0050
A4CR7	1901-0050	3		DIODE-SWITCHING 80V 200MA 2NS DO-35	28480	1901-0050
A4P1	1251-7986	9	1	CONN-POST TYPE .100-PIN-SPCG 50-CONT	28480	1251-7986
A4R1	0698-7847	6	5	RESISTOR 1.111K .1% .125W F TC=0+-25	19701	MF4C1/8-T9-1111R-B
A4R2	0698-6360	6	8	RESISTOR 10K .1% .125W F TC=0+-25	28480	0698-6360
A4R3	0699-0020	5	4	RESISTOR 1.31991K .1% .125W F TC=0+-25	28480	0699-0020
A4R4	0699-0020	5		RESISTOR 1.31991K .1% .125W F TC=0+-25	28480	0699-0020
A4R5	0698-6360	6		RESISTOR 10K .1% .125W F TC=0+-25	28480	0698-6360
A4R6	0698-7847	6		RESISTOR 1.111K .1% .125W F TC=0+-25	19701	MF4C1/8-T9-1111R-B
A4R7	0699-0020	5		RESISTOR 1.31991K .1% .125W F TC=0+-25	28480	0699-0020
A4R8	0699-0020	5		RESISTOR 1.31991K .1% .125W F TC=0+-25	28480	0699-0020
A4R9	0698-3162	0	1	RESISTOR 46.4K 1% .125W F TC=0+-100	24546	C4-1/8-T0-4642-F
A4R10	0698-0085	0	3	RESISTOR 2.61K 1% .125W F TC=0+-100	24546	C4-1/8-T0-2611-F
A4R11	0698-0085	0		RESISTOR 2.61K 1% .125W F TC=0+-100	24546	C4-1/8-T0-2611-F
A4R12	0698-8638	5	2	RESISTOR 3.16K .1% .125W F TC=0+-25	28480	0698-8638
A4R13	0698-6445	8	6	RESISTOR 6.838K .1% .125W F TC=0+-25	28480	0698-6445
A4R14	0698-8638	5		RESISTOR 3.16K .1% .125W F TC=0+-25	28480	0698-8638
A4R15	0698-7847	6		RESISTOR 1.111K .1% .125W F TC=0+-25	19701	MF4C1/8-T9-1111R-B
A4R16	0698-6360	6		RESISTOR 10K .1% .125W F TC=0+-25	28480	0698-6360
A4R17	0698-6445	8		RESISTOR 6.838K .1% .125W F TC=0+-25	28480	0698-6445
A4R18	0698-6445	8		RESISTOR 6.838K .1% .125W F TC=0+-25	28480	0698-6445
A4R19	0698-6446	9	4	RESISTOR 2.162K .1% .125W F TC=0+-25	28480	0698-6446
A4R20	0698-6447	0	2	RESISTOR 683.8 .1% .125W F TC=0+-25	28480	0698-6447
A4R21	0698-7585	9	2	RESISTOR 316.2 .1% .125W F TC=0+-25	19701	MF4C1/8-T9-316R2-B
A4R22	0698-6445	8		RESISTOR 6.838K .1% .125W F TC=0+-25	28480	0698-6445
A4R23	0698-6446	9		RESISTOR 2.162K .1% .125W F TC=0+-25	28480	0698-6446
A4R24	0698-6447	0		RESISTOR 683.8 .1% .125W F TC=0+-25	28480	0698-6447
A4R25	0698-7585	9		RESISTOR 316.2 .1% .125W F TC=0+-25	19701	MF4C1/8-T9-316R2-B
A4R26	0698-7847	6		RESISTOR 1.111K .1% .125W F TC=0+-25	19701	MF4C1/8-T9-1111R-B
A4R27	0698-6360	6		RESISTOR 10K .1% .125W F TC=0+-25	28480	0698-6360
A4R28	0698-6445	8		RESISTOR 6.838K .1% .125W F TC=0+-25	28480	0698-6445
A4R29	0698-6446	9		RESISTOR 2.162K .1% .125W F TC=0+-25	28480	0698-6446
A4R30	0698-6362	8	2	RESISTOR 1K .1% .125W F TC=0+-25	28480	0698-6362
A4R31	0698-0085	0		RESISTOR 2.61K 1% .125W F TC=0+-100	24546	C4-1/8-T0-2611-F
A4R32	0698-6362	8		RESISTOR 1K .1% .125W F TC=0+-25	28480	0698-6362
A4R33	0698-6446	9		RESISTOR 2.162K .1% .125W F TC=0+-25	28480	0698-6446
A4R34	0698-6445	8		RESISTOR 6.838K .1% .125W F TC=0+-25	28480	0698-6445
A4R35	0698-4037	0	0	RESISTOR 46.4 1% .125W F TC=0+-100	24546	C4-1/8-T0-46R4-F
A4R36	0698-4037	0		RESISTOR 46.4 1% .125W F TC=0+-100	24546	C4-1/8-T0-46R4-F
A4R37	0698-4037	0		RESISTOR 46.4 1% .125W F TC=0+-100	24546	C4-1/8-T0-46R4-F
A4R38	0698-7847	6		RESISTOR 1.111K .1% .125W F TC=0+-25	19701	MF4C1/8-T9-1111R-B
A4R39	0698-6360	6		RESISTOR 10K .1% .125W F TC=0+-25	28480	0698-6360
A4R40	0698-4037	0		RESISTOR 46.4 1% .125W F TC=0+-100	24546	C4-1/8-T0-46R4-F
A4R41	0757-0438	3	1	RESISTOR 5.11K 1% .125W F TC=0+-100	24546	C4-1/8-T0-5111-F
A4R42	0698-6360	6		RESISTOR 10K .1% .125W F TC=0+-25	28480	0698-6360
A4R43	0698-6360	6		RESISTOR 10K .1% .125W F TC=0+-25	28480	0698-6360
A4R44	0698-4037	0		RESISTOR 46.4 1% .125W F TC=0+-100	24546	C4-1/8-T0-46R4-F
A4R45	0698-4037	0		RESISTOR 46.4 1% .125W F TC=0+-100	24546	C4-1/8-T0-46R4-F
A4R46	0699-1099	0	1	RESISTOR 60.79K .1% .125W F TC=0+-25	28480	0699-1099
A4R47	0699-1100	4	1	RESISTOR 6.984K .1% .125W F TC=0+-25	28480	0699-1100
A4R48	0698-8831	0	1	RESISTOR 13.4K .1% .125W F TC=0+-10	28480	0698-8831
A4R49	0698-4037	0		RESISTOR 46.4 1% .125W F TC=0+-100	24546	C4-1/8-T0-46R4-F
A4R50	0698-4037	0		RESISTOR 46.4 1% .125W F TC=0+-100	24546	C4-1/8-T0-46R4-F
A4R51	0698-6360	6		RESISTOR 10K .1% .125W F TC=0+-25	28480	0698-6360
A4R52	0698-6673	4	1	RESISTOR 63K 1% .125W F TC=0+-50	28480	0698-6673
A4R53	0699-0722	4	1	RESISTOR 23.7K .1% .125W F TC=0+-25	28480	0699-0722
A4TP1-A4TP6	1251-5038	8	6	CONNECTOR 6-PIN M POST TYPE	22526	65500-106
A4U102	1826-0861	4	1	IC CONV 10-B D/A 16-DIP-P PKG	24355	AD7533LN
A4U104	1826-0915	9	5	IC OP AMP LOW-BIAS-H-IMPD 8-DIP-C PKG	01295	TL071ACJG (PER HP DWG)
A4U106	1826-0735	1	9	IC OP AMP H-SLEW-RATE 8-DIP-P PKG	34371	HA3-2507-5
A4U108	1826-0735	1		IC OP AMP H-SLEW-RATE 8-DIP-P PKG	34371	HA3-2507-5
A4U201	1826-0735	1		IC OP AMP H-SLEW-RATE 8-DIP-P PKG	34371	HA3-2507-5

See introduction to this section for ordering information
*Indicates factory selected value

Table 6-2. 4945A Replaceable Parts (Cont'd)

Reference Designation	HP Part Number	C D	Qty	Description	Mfr Code	Mfr Part Number
A4U202	1820-1997	7	1	IC FF TTL LS D-TYPE POS-EDGE-TRIG PRL-IN	01295	SN74LS374N
A4U204	1826-0915	9		IC OP AMP LOW-BIAS-H-IMPD 8-DIP-C PKG	01295	TL071ACJG (PER HP DWG)
A4U206	1826-0735	1		IC OP AMP H-SLEW-RATE 8-DIP-P PKG	34371	HA3-2507-5
A4U302	1820-1858	9	4	IC FF TTL LS D-TYPE OCTL	01295	SN74LS377N
A4U304	1826-0609	8	4	IC MULTIPLXR ANLG 16-DIP-C PKG	06665	MUX08FQ
A4U306	1826-0735	1		IC OP AMP H-SLEW-RATE 8-DIP-P PKG	34371	HA3-2507-5
A4U308	1826-0735	1		IC OP AMP H-SLEW-RATE 8-DIP-P PKG	34371	HA3-2507-5
A4U402	1820-1858	9		IC FF TTL LS D-TYPE OCTL	01295	SN74LS377N
A4U404	1826-0915	9		IC OP AMP LOW-BIAS-H-IMPD 8-DIP-C PKG	01295	TL071ACJG (PER HP DWG)
A4U406	1826-0609	8		IC MULTIPLXR ANLG 16-DIP-C PKG	06665	MUX08FQ
A4U408	1826-0735	1		IC OP AMP H-SLEW-RATE 8-DIP-P PKG	34371	HA3-2507-5
A4U502	1820-1858	9		IC FF TTL LS D-TYPE OCTL	01295	SN74LS377N
A4U504	1826-0915	9		IC OP AMP LOW-BIAS-H-IMPD 8-DIP-C PKG	01295	TL071ACJG (PER HP DWG)
A4U506	1826-0982	0	3	IC OP AMP LOW-NOISE 8-DIP-C PKG	28480	1826-0982
A4U508	1826-0982	0		IC OP AMP LOW-NOISE 8-DIP-C PKG	28480	1826-0982
A4U602	1820-1858	9		IC FF TTL LS D-TYPE OCTL	01295	SN74LS377N
A4U604	1826-0915	9		IC OP AMP LOW-BIAS-H-IMPD 8-DIP-C PKG	01295	TL071ACJG (PER HP DWG)
A4U606	1826-0982	0		IC OP AMP LOW-NOISE 8-DIP-C PKG	28480	1826-0982
A4U608	1826-1048	1	1	IC OP AMP PRCN 8-DIP-C PKG	28480	1826-1048
A4U702	1820-1216	3	1	IC DCDR TTL LS 3-TO-8-LINE 3-INP	01295	SN74LS138N
A4U704	1826-0740	8	2	IC SWITCH ANLG DUAL 16-DIP-C PKG	32293	IH5043CDE
A4U706	1826-0740	8		IC SWITCH ANLG DUAL 16-DIP-C PKG	32293	IH5043CDE
A4U708	1826-0735	1		IC OP AMP H-SLEW-RATE 8-DIP-P PKG	34371	HA3-2507-5
A4U802	1820-1419	8	1	IC COMPTR TTL LS MAGTD 4-BIT	01295	SN74LS85N
A4U804	1826-0609	8		IC MULTIPLXR ANLG 16-DIP-C PKG	06665	MUX08FQ
A4U806	1826-0609	8		IC MULTIPLXR ANLG 16-DIP-C PKG	06665	MUX08FQ
A4U808	1826-0735	1		IC OP AMP H-SLEW-RATE 8-DIP-P PKG	34371	HA3-2507-5
A4U901	1826-0753	3	1	IC OP AMP LOW-BIAS-H-IMPD QUAD 14-DIP-C	04713	MC34004BL
A4U902	1820-1197	9	1	IC GATE TTL LS NAND QUAD 2-INP	01295	SN74LS00N
	1480-0116	8	1	PIN-GRV .062-IN-DIA .25-IN-LG STL	28480	1480-0116
	4040-0747	2	1	EXTR-PC BD GRA POLYC .062-BD-THKNS	28480	4040-0747
	5080-8541	5	1	A4-ID LABEL	28480	5080-8541

See introduction to this section for ordering information
*Indicates factory selected value

Table 6-2. 4945A Replaceable Parts (Cont'd)

Reference Designation	HP Part Number	C D	Qty	Description	Mfr Code	Mfr Part Number
A5	04945-60005	7	1	DETECTOR BOARD	28480	04945-60005
A5C1	0180-0374	3	9	CAPACITOR-FXD 10UF+-10% 20VDC TA	56289	150D106X9020B2
A5C2	0180-0374	3		CAPACITOR-FXD 10UF+-10% 20VDC TA	56289	150D106X9020B2
A5C3	0180-0374	3		CAPACITOR-FXD 10UF+-10% 20VDC TA	56289	150D106X9020B2
A5C4	0180-0374	3		CAPACITOR-FXD 10UF+-10% 20VDC TA	56289	150D106X9020B2
A5C5	0180-0374	3		CAPACITOR-FXD 10UF+-10% 20VDC TA	56289	150D106X9020B2
A5C6	0180-0374	3		CAPACITOR-FXD 10UF+-10% 20VDC TA	56289	150D106X9020B2
A5C7	0160-4426	2	3	CAPACITOR-FXD .01UF +-1% 100VDC CER	28480	0160-4426
A5C8	0160-4426	2		CAPACITOR-FXD .01UF +-1% 100VDC CER	28480	0160-4426
A5C9	0160-4426	2		CAPACITOR-FXD .01UF +-1% 100VDC CER	28480	0160-4426
A5C10	0160-5298	8	52	CAPACITOR-FXD .01UF +-20% 100VDC CER	28480	0160-5298
A5C11	0160-5298	8		CAPACITOR-FXD .01UF +-20% 100VDC CER	28480	0160-5298
A5C12	0160-5298	8		CAPACITOR-FXD .01UF +-20% 100VDC CER	28480	0160-5298
A5C13	0160-5298	8		CAPACITOR-FXD .01UF +-20% 100VDC CER	28480	0160-5298
A5C14	0160-5298	8		CAPACITOR-FXD .01UF +-20% 100VDC CER	28480	0160-5298
A5C15	0160-5298	8		CAPACITOR-FXD .01UF +-20% 100VDC CER	28480	0160-5298
A5C16	0160-5298	8		CAPACITOR-FXD .01UF +-20% 100VDC CER	28480	0160-5298
A5C17	0160-5298	8		CAPACITOR-FXD .01UF +-20% 100VDC CER	28480	0160-5298
A5C18	0160-5298	8		CAPACITOR-FXD .01UF +-20% 100VDC CER	28480	0160-5298
A5C19	0160-5298	8		CAPACITOR-FXD .01UF +-20% 100VDC CER	28480	0160-5298
A5C20	0160-4786	7	1	CAPACITOR-FXD 27PF +-5% 100VDC CER 0+-30	28480	0160-4786
A5C22	0160-5298	8		CAPACITOR-FXD .01UF +-20% 100VDC CER	28480	0160-5298
A5C23	0160-5298	8		CAPACITOR-FXD .01UF +-20% 100VDC CER	28480	0160-5298
A5C24	0160-5298	8		CAPACITOR-FXD .01UF +-20% 100VDC CER	28480	0160-5298
A5C25	0160-5298	8		CAPACITOR-FXD .01UF +-20% 100VDC CER	28480	0160-5298
A5C26	0160-5298	8		CAPACITOR-FXD .01UF +-20% 100VDC CER	28480	0160-5298
A5C27	0160-5298	8		CAPACITOR-FXD .01UF +-20% 100VDC CER	28480	0160-5298
A5C28	0160-5298	8		CAPACITOR-FXD .01UF +-20% 100VDC CER	28480	0160-5298
A5C29	0160-5298	8		CAPACITOR-FXD .01UF +-20% 100VDC CER	28480	0160-5298
A5C30	0160-5298	8		CAPACITOR-FXD .01UF +-20% 100VDC CER	28480	0160-5298
A5C31	0160-5298	8		CAPACITOR-FXD .01UF +-20% 100VDC CER	28480	0160-5298
A5C32	0160-5298	8		CAPACITOR-FXD .01UF +-20% 100VDC CER	28480	0160-5298
A5C33	0160-5298	8		CAPACITOR-FXD .01UF +-20% 100VDC CER	28480	0160-5298
A5C34	0160-5298	8		CAPACITOR-FXD .01UF +-20% 100VDC CER	28480	0160-5298
A5C35	0160-5298	8		CAPACITOR-FXD .01UF +-20% 100VDC CER	28480	0160-5298
A5C36	0160-5298	8		CAPACITOR-FXD .01UF +-20% 100VDC CER	28480	0160-5298
A5C37	0160-5298	8		CAPACITOR-FXD .01UF +-20% 100VDC CER	28480	0160-5298
A5C38	0160-5298	8		CAPACITOR-FXD .01UF +-20% 100VDC CER	28480	0160-5298
A5C39	0160-5298	8		CAPACITOR-FXD .01UF +-20% 100VDC CER	28480	0160-5298
A5C40	0160-5298	8		CAPACITOR-FXD .01UF +-20% 100VDC CER	28480	0160-5298
A5C41	0160-5298	8		CAPACITOR-FXD .01UF +-20% 100VDC CER	28480	0160-5298
A5C42	0160-5298	8		CAPACITOR-FXD .01UF +-20% 100VDC CER	28480	0160-5298
A5C43	0160-5298	8		CAPACITOR-FXD .01UF +-20% 100VDC CER	28480	0160-5298
A5C44	0160-5298	8		CAPACITOR-FXD .01UF +-20% 100VDC CER	28480	0160-5298
A5C45	0160-5298	8		CAPACITOR-FXD .01UF +-20% 100VDC CER	28480	0160-5298
A5C46	0160-5298	8		CAPACITOR-FXD .01UF +-20% 100VDC CER	28480	0160-5298
A5C47	0160-5298	8		CAPACITOR-FXD .01UF +-20% 100VDC CER	28480	0160-5298
A5C48	0160-5298	8		CAPACITOR-FXD .01UF +-20% 100VDC CER	28480	0160-5298
A5C49	0160-5298	8		CAPACITOR-FXD .01UF +-20% 100VDC CER	28480	0160-5298
A5C50	0180-0100	3	1	CAPACITOR-FXD 4.7UF+-10% 35VDC TA	56289	150D475X9035B2
A5C51	0160-5298	8		CAPACITOR-FXD .01UF +-20% 100VDC CER	28480	0160-5298
A5C52	0160-5298	8		CAPACITOR-FXD .01UF +-20% 100VDC CER	28480	0160-5298
A5C53	0160-5298	8		CAPACITOR-FXD .01UF +-20% 100VDC CER	28480	0160-5298
A5C54	0160-5298	8		CAPACITOR-FXD .01UF +-20% 100VDC CER	28480	0160-5298
A5C55	0160-5298	8		CAPACITOR-FXD .01UF +-20% 100VDC CER	28480	0160-5298
A5C56	0160-0128	3	6	CAPACITOR-FXD 2.2UF +-20% 50VDC CER	28480	0160-0128
A5C57	0160-5298	8		CAPACITOR-FXD .01UF +-20% 100VDC CER	28480	0160-5298
A5C58	0160-5298	8		CAPACITOR-FXD .01UF +-20% 100VDC CER	28480	0160-5298
A5C59	0160-5298	8		CAPACITOR-FXD .01UF +-20% 100VDC CER	28480	0160-5298
A5C60	0160-5298	8		CAPACITOR-FXD .01UF +-20% 100VDC CER	28480	0160-5298
A5C61	0160-0128	3		CAPACITOR-FXD 2.2UF +-20% 50VDC CER	28480	0160-0128
A5C62	0160-0128	3		CAPACITOR-FXD 2.2UF +-20% 50VDC CER	28480	0160-0128
A5C63	0160-0128	3		CAPACITOR-FXD 2.2UF +-20% 50VDC CER	28480	0160-0128
A5C64	0180-0374	3		CAPACITOR-FXD 10UF+-10% 20VDC TA	56289	150D106X9020B2
A5C65	0180-0374	3		CAPACITOR-FXD 10UF+-10% 20VDC TA	56289	150D106X9020B2
A5C66	0180-0374	3		CAPACITOR-FXD 10UF+-10% 20VDC TA	56289	150D106X9020B2
A5C67	0160-0128	3		CAPACITOR-FXD 2.2UF +-20% 50VDC CER	28480	0160-0128
A5C68	0160-5298	8		CAPACITOR-FXD .01UF +-20% 100VDC CER	28480	0160-5298
A5C69	0160-5298	8		CAPACITOR-FXD .01UF +-20% 100VDC CER	28480	0160-5298
A5C70	0160-5298	8		CAPACITOR-FXD .01UF +-20% 100VDC CER	28480	0160-5298
A5C71	0160-5298	8		CAPACITOR-FXD .01UF +-20% 100VDC CER	28480	0160-5298

See introduction to this section for ordering information
*Indicates factory selected value

Table 6-2. 4945A Replaceable Parts (Cont'd)

Reference Designation	HP Part Number	C D	Qty	Description	Mfr Code	Mfr Part Number
A5C72	0160-5298	8		CAPACITOR-FXD .01UF +-20% 100VDC CER	28480	0160-5298
A5C73	0160-0128	3		CAPACITOR-FXD 2.2UF +-20% 50VDC CER	28480	0160-0128
A5C74	0180-0291	3	2	CAPACITOR-FXD 1UF+-10% 35VDC TA	56289	150D105X9035A2
A5C75	0180-0291	3		CAPACITOR-FXD 1UF+-10% 35VDC TA	56289	150D105X9035A2
A5CR1	1901-0376	6	5	DIODE-GEN PRP 35V 50MA DO-35	28480	1901-0376
A5CR2	1901-0376	6		DIODE-GEN PRP 35V 50MA DO-35	28480	1901-0376
A5CR3	1901-0376	6		DIODE-GEN PRP 35V 50MA DO-35	28480	1901-0376
A5CR4	1901-0376	6		DIODE-GEN PRP 35V 50MA DO-35	28480	1901-0376
A5CR5	1901-0376	6		DIODE-GEN PRP 35V 50MA DO-35	28480	1901-0376
A5CR6	1901-0518	8	4	DIODE-SM SIG SCHOTTKY	28480	1901-0518
A5CR7	1901-0518	8		DIODE-SM SIG SCHOTTKY	28480	1901-0518
A5CR8	1901-0518	8		DIODE-SM SIG SCHOTTKY	28480	1901-0518
A5CR9	1901-0518	8		DIODE-SM SIG SCHOTTKY	28480	1901-0518
A5CR12	1901-0050	3	4	DIODE-SWITCHING 80V 200MA 2NS DO-35	28480	1901-0050
A5CR13	1901-0050	3		DIODE-SWITCHING 80V 200MA 2NS DO-35	28480	1901-0050
A5CR14	1901-0050	3		DIODE-SWITCHING 80V 200MA 2NS DO-35	28480	1901-0050
A5CR15	1901-0050	3		DIODE-SWITCHING 80V 200MA 2NS DO-35	28480	1901-0050
A5P1	1251-7986	9	1	CONN-POST TYPE .100-PIN-SPCG 50-CONT	28480	1251-7986
A5R1	0698-3155	1	4	RESISTOR 4.64K 1% .125W F TC=0+-100	24546	C4-1/8-T0-4641-F
A5R2	0698-3150	6	2	RESISTOR 2.37K 1% .125W F TC=0+-100	24546	C4-1/8-T0-2371-F
A5R3	0757-0424	7	2	RESISTOR 1.1K 1% .125W F TC=0+-100	24546	C4-1/8-T0-1101-F
A5R4	0698-6360	6	13	RESISTOR 10K .1% .125W F TC=0+-25	28480	0698-6360
A5R5	0698-6360	6		RESISTOR 10K .1% .125W F TC=0+-25	28480	0698-6360
A5R6	0698-3155	1		RESISTOR 4.64K 1% .125W F TC=0+-100	24546	C4-1/8-T0-4641-F
A5R7	0698-3150	6		RESISTOR 2.37K 1% .125W F TC=0+-100	24546	C4-1/8-T0-2371-F
A5R8	0757-0424	7		RESISTOR 1.1K 1% .125W F TC=0+-100	24546	C4-1/8-T0-1101-F
A5R9	0698-6360	6		RESISTOR 10K .1% .125W F TC=0+-25	28480	0698-6360
A5R10	0698-6360	6		RESISTOR 10K .1% .125W F TC=0+-25	28480	0698-6360
A5R11	0757-0465	6	1	RESISTOR 100K 1% .125W F TC=0+-100	24546	C4-1/8-T0-1003-F
A5R12	0757-0459	8	1	RESISTOR 56.2K 1% .125W F TC=0+-100	24546	C4-1/8-T0-5622-F
A5R13	0698-3159	5	1	RESISTOR 26.1K 1% .125W F TC=0+-100	24546	C4-1/8-T0-2612-F
A5R14	0698-6360	6		RESISTOR 10K .1% .125W F TC=0+-25	28480	0698-6360
A5R15	0698-6360	6		RESISTOR 10K .1% .125W F TC=0+-25	28480	0698-6360
A5R16	0698-3155	1		RESISTOR 4.64K 1% .125W F TC=0+-100	24546	C4-1/8-T0-4641-F
A5R17	0757-0416	7	1	RESISTOR 511 1% .125W F TC=0+-100	24546	C4-1/8-T0-511R-F
A5R18	0757-0346	2	2	RESISTOR 10 1% .125W F TC=0+-100	24546	C4-1/8-T0-10R0-F
A5R19	0698-3160	8	1	RESISTOR 31.6K 1% .125W F TC=0+-100	24546	C4-1/8-T0-3162-F
A5R20	0757-0279	0	1	RESISTOR 3.16K 1% .125W F TC=0+-100	24546	C4-1/8-T0-3161-F
A5R21	0698-3155	1		RESISTOR 4.64K 1% .125W F TC=0+-100	24546	C4-1/8-T0-4641-F
A5R22	0698-6782	6	1	RESISTOR 250 .1% .125W F TC=0+-25	28480	0698-6782
A5R23	0698-6413	0	1	RESISTOR 6.5K .1% .125W F TC=0+-25	28480	0698-6413
A5R24	0698-6348	0	6	RESISTOR 3K .1% .125W F TC=0+-25	28480	0698-6348
A5R25	0698-6348	0		RESISTOR 3K .1% .125W F TC=0+-25	28480	0698-6348
A5R26	0698-6348	0		RESISTOR 3K .1% .125W F TC=0+-25	28480	0698-6348
A5R27	0698-6453	8	4	RESISTOR-MATCHED SET 10K; 5K	28480	0698-6453
A5R28	0698-6360	6		RESISTOR 10K .1% .125W F TC=0+-25	28480	0698-6360
A5R29	0698-6453	8		RESISTOR-MATCHED SET 10K; 5K	28480	0698-6453
A5R30	0698-6364	0	1	RESISTOR 50 .1% .125W F TC=0+-25	28480	0698-6364
A5R31	0698-6360	6		RESISTOR 10K .1% .125W F TC=0+-25	28480	0698-6360
A5R32	0698-6360	6		RESISTOR 10K .1% .125W F TC=0+-25	28480	0698-6360
A5R33	0698-6348	0		RESISTOR 3K .1% .125W F TC=0+-25	28480	0698-6348
A5R34	0698-6348	0		RESISTOR 3K .1% .125W F TC=0+-25	28480	0698-6348
A5R35	0698-6348	0		RESISTOR 3K .1% .125W F TC=0+-25	28480	0698-6348
A5R36	0698-6453	8		RESISTOR-MATCHED SET 10K; 5K	28480	0698-6453
A5R37	0698-6360	6		RESISTOR 10K .1% .125W F TC=0+-25	28480	0698-6360
A5R38	0698-6453	8		RESISTOR-MATCHED SET 10K; 5K	28480	0698-6453
A5R39	0698-6362	8	3	RESISTOR 1K .1% .125W F TC=0+-25	28480	0698-6362
A5R40	0757-0442	9	1	RESISTOR 10K 1% .125W F TC=0+-100	24546	C4-1/8-T0-1002-F
A5R41	0698-6362	8		RESISTOR 1K .1% .125W F TC=0+-25	28480	0698-6362
A5R42	0698-6360	6		RESISTOR 10K .1% .125W F TC=0+-25	28480	0698-6360
A5R43	0698-6360	6		RESISTOR 10K .1% .125W F TC=0+-25	28480	0698-6360
A5R44	0698-6362	8		RESISTOR 1K .1% .125W F TC=0+-25	28480	0698-6362
A5R45	0698-3162	0	5	RESISTOR 46.4K 1% .125W F TC=0+-100	24546	C4-1/8-T0-4642-F
A5R46	0698-3162	0		RESISTOR 46.4K 1% .125W F TC=0+-100	24546	C4-1/8-T0-4642-F
A5R47	0698-3162	0		RESISTOR 46.4K 1% .125W F TC=0+-100	24546	C4-1/8-T0-4642-F
A5R48	0698-3162	0		RESISTOR 46.4K 1% .125W F TC=0+-100	24546	C4-1/8-T0-4642-F
A5R49	0698-6360	6		RESISTOR 10K .1% .125W F TC=0+-25	28480	0698-6360
A5R50	0698-3162	0		RESISTOR 46.4K 1% .125W F TC=0+-100	24546	C4-1/8-T0-4642-F
A5R53	0757-0346	2		RESISTOR 10 1% .125W F TC=0+-100	24546	C4-1/8-T0-10R0-F
A5TP1-A5TP4	1251-5619	1	4	CONNECTOR 4-PIN M POST TYPE	28480	1251-5619
A5U104	1820-1211	8	1	IC GATE TTL LS EXCL-OR QUAD 2-INP	01295	SN74LS86N
A5U105	1820-1195	7	1	IC FF TTL LS D-TYPE POS-EDGE-TRIG COM	01295	SN74LS175N
A5U106	1826-0098	9	1	IC COMPARATOR PRCN TO-99 PKG	27014	LM211H
A5U200	1826-0735	1	4	IC OP AMP H-SLEW-RATE 8-DIP-P PKG	34371	HA3-2507-5
A5U201	1826-0735	1		IC OP AMP H-SLEW-RATE 8-DIP-P PKG	34371	HA3-2507-5

See introduction to this section for ordering information
*Indicates factory selected value

Table 6-2. 4945A Replaceable Parts (Cont'd)

Reference Designation	HP Part Number	C D	Qty	Description	Mfr Code	Mfr Part Number
A5U203	1826-1049	2	5	IC OP AMP PRCN 8-DIP-C PKG	28480	1826-1049
A5U204	1820-1244	7	1	IC MUXR/DATA-SEL TTL LS 4-TO-1-LINE DUAL	01295	SN74LS153N
A5U205	1820-1425	6	1	IC SCHMITT-TRIG TTL LS NAND QUAD 2-INP	01295	SN74LS132N
A5U206	1826-1047	0	2	IC OP AMP PRCN 8-DIP-C PKG	28480	1826-1047
A5U300	1826-1049	2		IC OP AMP PRCN 8-DIP-C PKG	28480	1826-1049
A5U301	1826-1049	2		IC OP AMP PRCN 8-DIP-C PKG	28480	1826-1049
A5U302	1826-1049	2		IC OP AMP PRCN 8-DIP-C PKG	28480	1826-1049
A5U303	1826-1049	2		IC OP AMP PRCN 8-DIP-C PKG	28480	1826-1049
A5U304	1826-1043	6	1	IC V RGLTR-FXD-POS 9.99/10.01V TO-5 PKG	28480	1826-1043
A5U305	1826-1013	0	1	D/A 12-1/2-BIT 24-DIP-C BPLR	28480	1826-1013
A5U306	1820-1435	8	3	IC CNTR TTL LS BIN UP/DOWN SYNCHRO	01295	SN74LS669N
A5U400	1826-1047	0		IC OP AMP PRCN 8-DIP-C PKG	28480	1826-1047
A5U401	1826-0735	1		IC OP AMP H-SLEW-RATE 8-DIP-P PKG	34371	HA3-2507-5
A5U402	1826-0915	9	2	IC OP AMP LOW-BIAS-H-IMPD 8-DIP-C PKG	01295	TL071ACJG (PER HP DWG)
A5U403	1826-0735	1		IC OP AMP H-SLEW-RATE 8-DIP-P PKG	34371	HA3-2507-5
A5U404	1826-0740	8	2	IC SWITCH ANLG DUAL 16-DIP-C PKG	32293	IH5043CDE
A5U405	1820-1997	7	2	IC FF TTL LS D-TYPE POS-EDGE-TRIG PRL-IN	01295	SN74LS374N
A5U406	1820-1435	8		IC CNTR TTL LS BIN UP/DOWN SYNCHRO	01295	SN74LS669N
A5U504	1826-0915	9		IC OP AMP LOW-BIAS-H-IMPD 8-DIP-C PKG	01295	TL071ACJG (PER HP DWG)
A5U505	1820-1997	7		IC FF TTL LS D-TYPE POS-EDGE-TRIG PRL-IN	01295	SN74LS374N
A5U506	1820-1435	8		IC CNTR TTL LS BIN UP/DOWN SYNCHRO	01295	SN74LS669N
A5U601	1826-0500	8	1	IC CONV RMS/DC 14-DIP-C PKG	24355	AD536K
A5U602	1826-0740	8		IC SWITCH ANLG DUAL 16-DIP-C PKG	32293	IH5043CDE
A5U604	1826-0689	8	3	IC MULTIPLXR ANLG 16-DIP-C PKG	06665	MUX08FQ
A5U605	1820-1858	9	2	IC FF TTL LS D-TYPE OCTL	01295	SN74LS377N
A5U606	1820-1216	3	1	IC DCDR TTL LS 3-TO-8-LINE 3-INP	01295	SN74LS138N
A5U701	1826-0689	8		IC MULTIPLXR ANLG 16-DIP-C PKG	06665	MUX08FQ
A5U702	1826-0689	8		IC MULTIPLXR ANLG 16-DIP-C PKG	06665	MUX08FQ
A5U705	1820-1858	9		IC FF TTL LS D-TYPE OCTL	01295	SN74LS377N
A5U706	1820-1419	8	1	IC COMPTR TTL LS MAGTD 4-BIT	01295	SN74LS85N
	1480-0116	8	2	PIN-GRV .062-IN-DIA .25-IN-LG STL	28480	1480-0116
	4040-0747	2	2	EXTR-PC BD GRA POLYC .062-BD-THKNS	28480	4040-0747
	5080-8542	6	1	A5-ID LABEL	28480	5080-8542

See introduction to this section for ordering information
*Indicates factory selected value

Table 6-2. 4945A Replaceable Parts (Cont'd)

Reference Designation	HP Part Number	C D	Qty	Description	Mfr Code	Mfr Part Number
A6	04945-60006	8	1	JITTER BOARD	28480	04945-60006
A6C1	0160-5695	9	5	CAPACITOR-FXD .1UF +-1% 200VDC MET-POLYC	28480	0160-5695
A6C2	0160-5695	9		CAPACITOR-FXD .1UF +-1% 200VDC MET-POLYC	28480	0160-5695
A6C3	0160-5298	8	21	CAPACITOR-FXD .01UF +-20% 100VDC CER	28480	0160-5298
A6C4	0160-5695	9		CAPACITOR-FXD .1UF +-1% 200VDC MET-POLYC	28480	0160-5695
A6C5	0160-3645	5	7	CAPACITOR-FXD 1UF +-1% 100VDC MET-POLYE	84411	X663F10511W2
A6C6	0160-5298	8		CAPACITOR-FXD .01UF +-20% 100VDC CER	28480	0160-5298
A6C7	0160-5298	8		CAPACITOR-FXD .01UF +-20% 100VDC CER	28480	0160-5298
A6C8	0160-4426	2	5	CAPACITOR-FXD .01UF +-1% 100VDC CER	28480	0160-4426
A6C9	0160-4586	5	3	CAPACITOR-FXD .033UF +-1% 100VDC CER	28480	0160-4586
A6C10	0180-0228	6	2	CAPACITOR-FXD 22UF+-10% 15VDC TA	56289	150D226X9015B2
A6C11	0180-0228	6		CAPACITOR-FXD 22UF+-10% 15VDC TA	56289	150D226X9015B2
A6C12	0160-5298	8		CAPACITOR-FXD .01UF +-20% 100VDC CER	28480	0160-5298
A6C13	0160-4426	2		CAPACITOR-FXD .01UF +-1% 100VDC CER	28480	0160-4426
A6C14	0160-4586	5		CAPACITOR-FXD .033UF +-1% 100VDC CER	28480	0160-4586
A6C15	0160-4586	5		CAPACITOR-FXD .033UF +-1% 100VDC CER	28480	0160-4586
A6C16	0160-5298	8		CAPACITOR-FXD .01UF +-20% 100VDC CER	28480	0160-5298
A6C17	0160-4426	2		CAPACITOR-FXD .01UF +-1% 100VDC CER	28480	0160-4426
A6C18	0160-3508	9	3	CAPACITOR-FXD 1UF +80-20% 50VDC CER	28480	0160-3508
A6C19	0170-0040	9	2	CAPACITOR-FXD .047UF +-10% 200VDC POLYE	56289	292P47392
A6C20	0160-3508	9		CAPACITOR-FXD 1UF +80-20% 50VDC CER	28480	0160-3508
A6C21	0160-4426	2		CAPACITOR-FXD .01UF +-1% 100VDC CER	28480	0160-4426
A6C22	0160-5298	8		CAPACITOR-FXD .01UF +-20% 100VDC CER	28480	0160-5298
A6C23	0160-5298	8		CAPACITOR-FXD .01UF +-20% 100VDC CER	28480	0160-5298
A6C24	0160-5298	8		CAPACITOR-FXD .01UF +-20% 100VDC CER	28480	0160-5298
A6C25	0180-1746	5	1	CAPACITOR-FXD 15UF+-10% 20VDC TA	56289	150D156X9020B2
A6C26	0160-5298	8		CAPACITOR-FXD .01UF +-20% 100VDC CER	28480	0160-5298
A6C27	0160-3508	9		CAPACITOR-FXD 1UF +80-20% 50VDC CER	28480	0160-3508
A6C28	0160-3645	5		CAPACITOR-FXD 1UF +-1% 100VDC MET-POLYE	84411	X663F10511W2
A6C29	0160-3645	5		CAPACITOR-FXD 1UF +-1% 100VDC MET-POLYE	84411	X663F10511W2
A6C30	0160-3645	5		CAPACITOR-FXD 1UF +-1% 100VDC MET-POLYE	84411	X663F10511W2
A6C31	0160-5298	8		CAPACITOR-FXD .01UF +-20% 100VDC CER	28480	0160-5298
A6C32	0180-2205	3	1	CAPACITOR-FXD .33UF+-10% 35VDC TA	56289	150D334X9035A2
A6C33	0160-5298	8		CAPACITOR-FXD .01UF +-20% 100VDC CER	28480	0160-5298
A6C34	0160-5298	8		CAPACITOR-FXD .01UF +-20% 100VDC CER	28480	0160-5298
A6C35	0160-3645	5		CAPACITOR-FXD 1UF +-1% 100VDC MET-POLYE	84411	X663F10511W2
A6C36	0170-0040	9		CAPACITOR-FXD .047UF +-10% 200VDC POLYE	56289	292P47392
A6C37	0160-5298	8		CAPACITOR-FXD .01UF +-20% 100VDC CER	28480	0160-5298
A6C38	0160-4389	6	1	CAPACITOR-FXD 100PF +-5PF 200VDC CER	28480	0160-4389
A6C39	0160-5298	8		CAPACITOR-FXD .01UF +-20% 100VDC CER	28480	0160-5298
A6C40	0160-4426	2		CAPACITOR-FXD .01UF +-1% 100VDC CER	28480	0160-4426
A6C41	0160-5298	8		CAPACITOR-FXD .01UF +-20% 100VDC CER	28480	0160-5298
A6C42	0160-5298	8		CAPACITOR-FXD .01UF +-20% 100VDC CER	28480	0160-5298
A6C43	0160-5298	8		CAPACITOR-FXD .01UF +-20% 100VDC CER	28480	0160-5298
A6C44	0160-5298	8		CAPACITOR-FXD .01UF +-20% 100VDC CER	28480	0160-5298
A6C45	0160-5695	9		CAPACITOR-FXD .1UF +-1% 200VDC MET-POLYC	28480	0160-5695
A6C46	0160-5695	9		CAPACITOR-FXD .1UF +-1% 200VDC MET-POLYC	28480	0160-5695
A6C47	0160-5298	8		CAPACITOR-FXD .01UF +-20% 100VDC CER	28480	0160-5298
A6C48	0160-5298	8		CAPACITOR-FXD .01UF +-20% 100VDC CER	28480	0160-5298
A6C49	0160-3903	8	2	CAPACITOR-FXD 1.0UF 200VDC	28480	0160-3903
A6C50	0160-3903	8		CAPACITOR-FXD 1.0UF 200VDC	28480	0160-3903
A6C51	0160-3645	5		CAPACITOR-FXD 1UF +-1% 100VDC MET-POLYE	84411	X663F10511W2
A6C52	0160-3645	5		CAPACITOR-FXD 1UF +-1% 100VDC MET-POLYE	84411	X663F10511W2
A6C53	0180-0374	3	3	CAPACITOR-FXD 10UF+-10% 20VDC TA	56289	150D106X9020B2
A6C54	0180-0374	3		CAPACITOR-FXD 10UF+-10% 20VDC TA	56289	150D106X9020B2
A6C55	0180-0374	3		CAPACITOR-FXD 10UF+-10% 20VDC TA	56289	150D106X9020B2
A6C56	0160-5298	8		CAPACITOR-FXD .01UF +-20% 100VDC CER	28480	0160-5298
A6C57	0160-4565	0	1	CAPACITOR-FXD 1000PF +-1% 100VDC CER	28480	0160-4565
A6C58	0180-2206	4	2	CAPACITOR-FXD 68UF+-10% 6VDC TA	56289	150D686X9006B2
A6C59	0180-2206	4		CAPACITOR-FXD 68UF+-10% 6VDC TA	56289	150D686X9006B2
A6CR1	1901-0050	3	7	DIODE-SWITCHING 80V 200MA 2NS DO-35	28480	1901-0050
A6CR2	1901-0050	3		DIODE-SWITCHING 80V 200MA 2NS DO-35	28480	1901-0050
A6CR3	1932-0954	8	1	DIODE-ZNR 6.8V 5% DO-35 PD=.4W TC=+.057%	28480	1932-0954
A6CR4	1901-0050	3		DIODE-SWITCHING 80V 200MA 2NS DO-35	28480	1901-0050
A6CR5	1901-0050	3		DIODE-SWITCHING 80V 200MA 2NS DO-35	28480	1901-0050
A6CR6	1901-0050	3		DIODE-SWITCHING 80V 200MA 2NS DO-35	28480	1901-0050
A6CR7	1901-0050	3		DIODE-SWITCHING 80V 200MA 2NS DO-35	28480	1901-0050
A6CR8	1901-0050	3		DIODE-SWITCHING 80V 200MA 2NS DO-35	28480	1901-0050
A6CR9	1932-0949	1	2	DIODE-ZNR 4.3V 5% DO-35 PD=.4W TC=+.017%	28480	1932-0949
A6CR10	1902-0949	1		DIODE-ZNR 4.3V 5% DO-35 PD=.4W TC=+.017%	28480	1902-0949
A6P1	1251-7986	9	1	CONN-POST TYPE .100-PIN-SPCG 50-CONT	28480	1251-7986

See introduction to this section for ordering information
*Indicates factory selected value

Table 6-2. 4945A Replaceable Parts (Cont'd)

Reference Designation	HP Part Number	C D	Qty	Description	Mfr Code	Mfr Part Number
A6Q1	1853-0459	3	2	TRANSISTOR PNP SI PD=625MW FT=200MHZ	28480	1853-0459
A6Q2	1853-0459	3		TRANSISTOR PNP SI PD=625MW FT=200MHZ	28480	1853-0459
A6Q3	1855-0420	2	1	TRANSISTOR J-FET 2N4391 N-CHAN D-MODE	01295	2N4391
A6R1	0757-0442	9	17	RESISTOR 10K 1% .125W F TC=0+-100	24546	C4-1/8-T0-1002-F
A6R2	0757-0442	9		RESISTOR 10K 1% .125W F TC=0+-100	24546	C4-1/8-T0-1002-F
A6R3	0757-0442	9		RESISTOR 10K 1% .125W F TC=0+-100	24546	C4-1/8-T0-1002-F
A6R4	0698-3450	9	1	RESISTOR 42.2K 1% .125W F TC=0+-100	24546	C4-1/8-T0-4222-F
A6R5	0757-0439	4	3	RESISTOR 6.81K 1% .125W F TC=0+-100	24546	C4-1/8-T0-6811-F
A6R6	0698-3243	8	1	RESISTOR 178K 1% .125W F TC=0+-100	24546	C4-1/8-T0-1783-F
A6R7	0757-0443	0	1	RESISTOR 11K 1% .125W F TC=0+-100	28480	0757-0443
A6R8	0698-3162	7	1	RESISTOR 46.4K 1% .125W F TC=0+-100	28480	0698-3162
A6R9	0757-0459	0	3	RESISTOR 56.2K 1% .125W F TC=0+-100	28480	0757-0459
A6R10	0757-0443	0	4	RESISTOR 11K 1% .125W F TC=0+-100	28480	0757-0443
A6R11	0757-0199	3	6	RESISTOR 21.5K 1% .125W F TC=0+-100	24546	C4-1/8-T0-2152-F
A6R12	0757-0199	3		RESISTOR 21.5K 1% .125W F TC=0+-100	24546	C4-1/8-T0-2152-F
A6R13	0757-0440	7	1	RESISTOR 7.5K 1% .125W F TC=0+-100	28480	0757-0440
A6R14	0757-0199	3	1	RESISTOR 21.5K 1% .125W F TC=0+-100	28480	0757-0199
A6R15	0698-6360	6		RESISTOR 10K 1% .125W F TC=0+-100	28480	0698-6360
A6R16	0698-6360	9		RESISTOR 10K 1% .125W F TC=0+-100	28480	0698-6360
A6R17	0757-0439	4		RESISTOR 6.81K 1% .125W F TC=0+-100	24546	C4-1/8-T0-6811-F
A6R18	0757-0199	3		RESISTOR 21.5K 1% .125W F TC=0+-100	24546	C4-1/8-T0-2152-F
A6R19	0698-3430	5	2	RESISTOR 21.5 1% .125W F TC=0+-100	03888	PME55-1/8-T0-21R5-F
A6R20	0698-3447	4	3	RESISTOR 422 1% .125W F TC=0+-100	24546	C4-1/8-T0-422R-F
A6R21	0683-1065	7	1	RESISTOR 10M 5% .25W CC TC=-900/+1100	01121	CB1065
A6R22	0757-0439	4		RESISTOR 6.81K 1% .125W F TC=0+-100	24546	C4-1/8-T0-6811-F
A6R23	0757-0199	3		RESISTOR 21.5K 1% .125W F TC=0+-100	24546	C4-1/8-T0-2152-F
A6R24	0698-3447	4		RESISTOR 422 1% .125W F TC=0+-100	24546	C4-1/8-T0-422R-F
A6R25	0757-0123	3	3	RESISTOR 34.8K 1% .125W F TC=0+-100	28480	0757-0123
A6R26	0757-0470	3	2	RESISTOR 162K 1% .125W F TC=0+-100	24546	C4-1/8-T0-1623-F
A6R27	0698-6360	6		RESISTOR 10K 1% .125W F TC=0+-100	28480	0698-6360
A6R28	0698-6360	6		RESISTOR 10K 1% .125W F TC=0+-100	28480	0698-6360
A6R29	0698-3260	9	1	RESISTOR 464K 1% .125W F TC=0+-100	28480	0698-3260
A6R30	0757-0447	4	1	RESISTOR 16.2K 1% .125W F TC=0+-100	24546	C4-1/8-T0-1622-F
A6R31	0757-0199	3		RESISTOR 21.5K 1% .125W F TC=0+-100	24546	C4-1/8-T0-2152-F
A6R32	0757-0460	1		RESISTOR 61.9K 1% .125W F TC=0+-100	24546	C4-1/8-T0-6192-F
A6R33	0698-3430	5		RESISTOR 21.5 1% .125W F TC=0+-100	03888	PME55-1/8-T0-21R5-F
A6R34	0757-0459	0	1	RESISTOR 56.2K 1% .125W F TC=0+-100	24546	C4-1/8-T0-5622-F
A6R35	0757-0280	3	2	RESISTOR 1K 1% .125W F TC=0+-100	24546	C4-1/8-T0-1001-F
A6R36	0698-3447	4		RESISTOR 422 1% .125W F TC=0+-100	24546	C4-1/8-T0-422R-F
A6R37	0698-3157	3	2	RESISTOR 19.6K 1% .125W F TC=0+-100	24546	C4-1/8-T0-1962-F
A6R38	0757-0442	9		RESISTOR 10K 1% .125W F TC=0+-100	24546	C4-1/8-T0-1002-F
A6R39	0757-0442	9		RESISTOR 10K 1% .125W F TC=0+-100	24546	C4-1/8-T0-1002-F
A6R40	0757-0123	3		RESISTOR 34.8K 1% .125W F TC=0+-100	28480	0757-0123
A6R41	0698-3455	4	2	RESISTOR 261K 1% .125W F TC=0+-100	24546	C4-1/8-T0-2613-F
A6R42	0757-0289	2	1	RESISTOR 13.3K 1% .125W F TC=0+-100	19701	MF4C1/8-T0-1332-F
A6R43	0698-3451	0	1	RESISTOR 133K 1% .125W F TC=0+-100	24546	C4-1/8-T0-1333-F
A6R44	0757-0123	3		RESISTOR 34.8K 1% .125W F TC=0+-100	28480	0757-0123
A6R45	0757-0438	3	3	RESISTOR 5.11K 1% .125W F TC=0+-100	24546	C4-1/8-T0-5111-F
A6R46	0698-3452	1	1	RESISTOR 147K 1% .125W F TC=0+-100	24546	C4-1/8-T0-1473-F
A6R47	0757-0467	8	1	RESISTOR 121K 1% .125W F TC=0+-100	24546	C4-1/8-T0-1213-F
A6R48	0698-0083	8	2	RESISTOR 1.96K 1% .125W F TC=0+-100	24546	C4-1/8-T0-1961-F
A6R49	0757-0448	5	1	RESISTOR 18.2K 1% .125W F TC=0+-100	24546	C4-1/8-T0-1822-F
A6R50	0698-0083	8		RESISTOR 1.96K 1% .125W F TC=0+-100	24546	C4-1/8-T0-1961-F
A6R51	0757-0460	1		RESISTOR 61.9K 1% .125W F TC=0+-100	24546	C4-1/8-T0-6192-F
A6R52	0698-3455	4		RESISTOR 261K 1% .125W F TC=0+-100	24546	C4-1/8-T0-2613-F
A6R53	0757-0280	3		RESISTOR 1K 1% .125W F TC=0+-100	24546	C4-1/8-T0-1001-F
A6R54	0757-0470	3		RESISTOR 162K 1% .125W F TC=0+-100	24546	C4-1/8-T0-1623-F
A6R55	0698-3159	5	1	RESISTOR 26.1K 1% .125W F TC=0+-100	24546	C4-1/8-T0-2612-F
A6R56	0757-0442	9		RESISTOR 10K 1% .125W F TC=0+-100	24546	C4-1/8-T0-1002-F
A6R57	0757-0442	9		RESISTOR 10K 1% .125W F TC=0+-100	24546	C4-1/8-T0-1002-F
A6R58	0757-0442	9		RESISTOR 10K 1% .125W F TC=0+-100	24546	C4-1/8-T0-1002-F
A6R59	0757-0442	9		RESISTOR 10K 1% .125W F TC=0+-100	24546	C4-1/8-T0-1002-F
A6R60	0698-6353	7	1	RESISTOR 50K 1% .125W F TC=0±25	28480	0698-6353
A6R61	0698-6358	2	1	RESISTOR 100K 1% .125W F TC=0±25	28480	0698-6358
A6R62	0698-3157	3		RESISTOR 19.6K 1% .125W F TC=0+-100	24546	C4-1/8-T0-1962-F
A6R63	0757-0442	9		RESISTOR 10K 1% .125W F TC=0+-100	24546	C4-1/8-T0-1002-F
A6R64	0757-0288	1		RESISTOR 9.09K 1% .125W F TC=0+-100	19701	MF4C1/8-T0-9091-F
A6R65	0757-0442	9		RESISTOR 10K 1% .125W F TC=0+-100	24546	C4-1/8-T0-1002-F
A6R66	0698-3151	7	3	RESISTOR 2.87K 1% .125W F TC=0+-100	24546	C4-1/8-T0-2871-F
A6R67	0757-0288	1		RESISTOR 9.09K 1% .125W F TC=0+-100	19701	MF4C1/8-T0-9091-F
A6R68	0757-0290	5	1	RESISTOR 6.19K 1% .125W F TC=0+-100	19701	MF4C1/8-T0-6191-F
A6R69	0757-0443	0	1	RESISTOR 11K 1% .125W F TC=0+-100	24546	C4-1/8-T0-1102-F
A6R70	0757-0440	7	1	RESISTOR 7.5K 1% .125W F TC=0+-100	24546	C4-1/8-T0-7501-F
A6R71	0757-0442	9		RESISTOR 10K 1% .125W F TC=0+-100	24546	C4-1/8-T0-1002-F
A6R72	0757-0401	0	3	RESISTOR 100 1% .125W F TC=0+-100	24546	C4-1/8-T0-101-F
A6R73	0757-0438	3		RESISTOR 5.11K 1% .125W F TC=0+-100	24546	C4-1/8-T0-5111-F
A6R74	0757-0288	1		RESISTOR 9.09K 1% .125W F TC=0+-100	19701	MF4C1/8-T0-9091-F
A6R75	0698-3151	7		RESISTOR 2.87K 1% .125W F TC=0+-100	24546	C4-1/8-T0-2871-F

See introduction to this section for ordering information
*Indicates factory selected value

Table 6-2. 4945A Replaceable Parts (Cont'd)

Reference Designation	HP Part Number	C D	Qty	Description	Mfr Code	Mfr Part Number
A6R76	0698-3151	7		RESISTOR 2.87K 1% .125W F TC=0+-100	24546	C4-1/8-T0-2871-F
A6R77	0757-0401	0		RESISTOR 100 1% .125W F TC=0+-100	24546	C4-1/8-T0-101-F
A6R78	0757-0438	3		RESISTOR 5.11K 1% .125W F TC=0+-100	24546	C4-1/8-T0-5111-F
A6R79	0757-0401	0		RESISTOR 100 1% .125W F TC=0+-100	24546	C4-1/8-T0-101-F
A6R80	0757-0442	9		RESISTOR 10K 1% .125W F TC=0+-100	24546	C4-1/8-T0-1002-F
A6TP1	1251-4670	2	3	CONNECTOR 3-PIN M POST TYPE	28480	1251-4670
A6TP2	1251-4670	2		CONNECTOR 3-PIN M POST TYPE	28480	1251-4670
A6TP3	1251-4670	2		CONNECTOR 3-PIN M POST TYPE	28480	1251-4670
A6TP4	0360-1682	0	6	TERMINAL-STUD SGL-TUR PRESS-MTG	28480	0360-1682
A6TP5	0360-1682	0		TERMINAL-STUD SGL-TUR PRESS-MTG	28480	0360-1682
A6TP6	0360-1682	0		TERMINAL-STUD SGL-TUR PRESS-MTG	28480	0360-1682
A6TP7	0360-1682	0		TERMINAL-STUD SGL-TUR PRESS-MTG	28480	0360-1682
A6TP8	1251-5618	0	1	CONNECTOR 8-PIN M POST TYPE	28480	1251-5618
A6U102	1826-0753	3	3	IC OP AMP LOW-BIAS-H-IMPD QUAD 14-DIP-C	04713	MC34004BL
A6U104	1826-0785	1	4	IC OP AMP LOW-BIAS-H-IMPD DUAL 8-DIP-C	01295	TL072ACJG
A6U106	1820-0938	4	2	IC FF CMOS J-K M/S POS-EDGE-TRIG DUAL	3L585	CD4027BE
A6U108	1820-0938	4		IC FF CMOS J-K M/S POS-EDGE-TRIG DUAL	3L585	CD4027BE
A6U200	1826-0753	3		IC OP AMP LOW-BIAS-H-IMPD QUAD 14-DIP-C	04713	MC34004BL
A6U204	1826-0740	8	2	IC SWITCH ANLG DUAL 16-DIP-C PKG	32293	IH5043CDE
A6U205	1826-0785	1		IC OP AMP LOW-BIAS-H-IMPD DUAL 8-DIP-C	01295	TL072ACJG
A6U206	1826-0180	0	2	IC TIMER TTL MONO/ASTBL	01295	NE555P
A6U208	1826-0180	0		IC TIMER TTL MONO/ASTBL	01295	NE555P
A6U300	1826-0276	5	1	IC 78L05A V RGLTR TO-92	04713	MC78L05ACP
A6U302	1826-0878	3	1	IC-LINEAR	28480	1826-0878
A6U305	1826-0026	3	3	IC COMPARATOR PRCN TO-99 PKG	01295	LM311L
A6U400	1820-1419	8	1	IC COMPTR TTL LS MAGTD 4-BIT	01295	SN74LS85N
A6U402	1826-0713	5	1	IC CONV 8-B-A/D 18-DIP-P PKG	24355	AD7574JN
A6U406	1826-0785	1		IC OP AMP LOW-BIAS-H-IMPD DUAL 8-DIP-C	01295	TL072ACJG
A6U408	1826-0785	1		IC OP AMP LOW-BIAS-H-IMPD DUAL 8-DIP-C	01295	TL072ACJG
A6U500	1820-1216	3	1	IC DCDR TTL LS 3-TO-8-LINE 3-INP	01295	SN74LS138N
A6U502	1820-2024	3	1	IC DRVR TTL LS LINE DRVR OCTL	01295	SN74LS244N
A6U504	1826-0753	3		IC OP AMP LOW-BIAS-H-IMPD QUAD 14-DIP-C	04713	MC34004BL
A6U506	1826-0740	8		IC SWITCH ANLG DUAL 16-DIP-C PKG	32293	IH5043CDE
A6U508	1820-1601	0	1	IC GATE CMOS EXCL-OR QUAD 2-INP	3L585	CD4070BE
A6U600	1820-1997	7	1	IC FF TTL LS D-TYPE POS-EDGE-TRIG PRL-IN	01295	SN74LS374N
A6U606	1826-0026	3		IC COMPARATOR PRCN TO-99 PKG	01295	LM311L
A6U607	1826-0026	3		IC COMPARATOR PRCN TO-99 PKG	01295	LM311L
A6U700	1820-1858	9	1	IC FF TTL LS D-TYPE OCTL	01295	SN74LS377N
A6U708	1821-0001	4	1	TRANSISTOR ARRAY 14-PIN PLSTC DIP	3L585	CA3046
	1480-0116	8	2	PIN-GRV .062-IN-DIA .25-IN-LG STL	28480	1480-0116
	4040-0747	2	2	EXTR-PC BD GRA POLYC .062-BD-THKNS	28480	4040-0747
	5080-8543	7	1	A6-ID LABEL	28480	5080-8543

See introduction to this section for ordering information
*Indicates factory selected value

Table 6-2. 4945A Replaceable Parts (Cont'd)

Reference Designation	HP Part Number	C D	Qty	Description	Mfr Code	Mfr Part Number
A7	04945-60007	9	1	USE ENV DELAY	28480	04945-60007
A7C1	0160-5695	9	7	CAPACITOR-FXD .1UF +-1% 200VDC MET-POLYC	28480	0160-5695
A7C2	0160-5695	9		CAPACITOR-FXD .1UF +-1% 200VDC MET-POLYC	28480	0160-5695
A7C3	0160-4801	7	2	CAPACITOR-FXD 100PF +-5% 100VDC CER	28480	0160-4801
A7C4	0160-5298	8	38	CAPACITOR-FXD .01UF +-20% 100VDC CER	28480	0160-5298
A7C5	0160-5298	8		CAPACITOR-FXD .01UF +-20% 100VDC CER	28480	0160-5298
A7C6	0160-5695	9		CAPACITOR-FXD .1UF +-1% 200VDC MET-POLYC	28480	0160-5695
A7C7	0160-5298	8		CAPACITOR-FXD .01UF +-20% 100VDC CER	28480	0160-5298
A7C8	0160-4801	7		CAPACITOR-FXD 100PF +-5% 100VDC CER	28480	0160-4801
A7C9	0160-5298	8		CAPACITOR-FXD .01UF +-20% 100VDC CER	28480	0160-5298
A7C10	0160-5298	8		CAPACITOR-FXD .01UF +-20% 100VDC CER	28480	0160-5298
A7C11	0160-5298	8		CAPACITOR-FXD .01UF +-20% 100VDC CER	28480	0160-5298
A7C12	0160-3510	3	4	CAPACITOR-FXD 3UF +-10% 50VDC MET-POLYC	28480	0160-3510
A7C13	0160-3510	3		CAPACITOR-FXD 3UF +-10% 50VDC MET-POLYC	28480	0160-3510
A7C14	0160-5695	9		CAPACITOR-FXD .1UF +-1% 200VDC MET-POLYC	28480	0160-5695
A7C15	0160-5695	9		CAPACITOR-FXD .1UF +-1% 200VDC MET-POLYC	28480	0160-5695
A7C16	0160-5695	9		CAPACITOR-FXD .1UF +-1% 200VDC MET-POLYC	28480	0160-5695
A7C17	0160-5298	8		CAPACITOR-FXD .01UF +-20% 100VDC CER	28480	0160-5298
A7C18	0160-5298	8		CAPACITOR-FXD .01UF +-20% 100VDC CER	28480	0160-5298
A7C19	0160-5695	9		CAPACITOR-FXD .1UF +-1% 200VDC MET-POLYC	28480	0160-5695
A7C20	0160-3510	3		CAPACITOR-FXD 3UF +-10% 50VDC MET-POLYC	28480	0160-3510
A7C21	0160-5298	8		CAPACITOR-FXD .01UF +-20% 100VDC CER	28480	0160-5298
A7C22	0160-5298	8		CAPACITOR-FXD .01UF +-20% 100VDC CER	28480	0160-5298
A7C23	0160-3397	4	1	CAPACITOR-FXD 6000PF +-1% 100VDC MICA	28480	0160-3397
A7C24	0160-5298	8		CAPACITOR-FXD .01UF +-20% 100VDC CER	28480	0160-5298
A7C25	0160-3510	3		CAPACITOR-FXD 3UF +-10% 50VDC MET-POLYC	28480	0160-3510
A7C26	0160-5298	8		CAPACITOR-FXD .01UF +-20% 100VDC CER	28480	0160-5298
A7C27	0160-5298	8		CAPACITOR-FXD .01UF +-20% 100VDC CER	28480	0160-5298
A7C28	0160-5298	8		CAPACITOR-FXD .01UF +-20% 100VDC CER	28480	0160-5298
A7C29	0160-5298	8		CAPACITOR-FXD .01UF +-20% 100VDC CER	28480	0160-5298
A7C30	0180-0228	6	2	CAPACITOR-FXD 22UF+-10% 15VDC TA	56289	150D226X9015B2
A7C31	0160-5298	8		CAPACITOR-FXD .01UF +-20% 100VDC CER	28480	0160-5298
A7C32	0160-2265	3	1	CAPACITOR-FXD 22PF +-5% 500VDC CER 0+-30	28480	0160-2265
A7C33	0180-0228	6		CAPACITOR-FXD 22UF+-10% 15VDC TA	56289	150D226X9015B2
A7C34	0160-5298	8		CAPACITOR-FXD .01UF +-20% 100VDC CER	28480	0160-5298
A7C35	0160-5298	8		CAPACITOR-FXD .01UF +-20% 100VDC CER	28480	0160-5298
A7C36	0160-5298	8		CAPACITOR-FXD .01UF +-20% 100VDC CER	28480	0160-5298
A7C37	0160-5298	8		CAPACITOR-FXD .01UF +-20% 100VDC CER	28480	0160-5298
A7C38	0160-5657	3	6	CAPACITOR-FXD 1200PF +-1% 100VDC CER	28480	0160-5657
A7C40	0160-5298	8		CAPACITOR-FXD .01UF +-20% 100VDC CER	28480	0160-5298
A7C41	0160-5298	8		CAPACITOR-FXD .01UF +-20% 100VDC CER	28480	0160-5298
A7C42	0160-5298	8		CAPACITOR-FXD .01UF +-20% 100VDC CER	28480	0160-5298
A7C43	0160-5298	8		CAPACITOR-FXD .01UF +-20% 100VDC CER	28480	0160-5298
A7C44	0160-5298	8		CAPACITOR-FXD .01UF +-20% 100VDC CER	28480	0160-5298
A7C45	0160-5298	8		CAPACITOR-FXD .01UF +-20% 100VDC CER	28480	0160-5298
A7C46	0160-5298	8		CAPACITOR-FXD .01UF +-20% 100VDC CER	28480	0160-5298
A7C47	0160-5298	8		CAPACITOR-FXD .01UF +-20% 100VDC CER	28480	0160-5298
A7C48	0160-5657	3		CAPACITOR-FXD 1200PF +-1% 100VDC CER	28480	0160-5657
A7C49	0160-5298	8		CAPACITOR-FXD .01UF +-20% 100VDC CER	28480	0160-5298
A7C50	0180-1746	5	3	CAPACITOR-FXD 15UF+-10% 20VDC TA	56289	150D156X9020B2
A7C51	0160-5298	8		CAPACITOR-FXD .01UF +-20% 100VDC CER	28480	0160-5298
A7C52	0160-5298	8		CAPACITOR-FXD .01UF +-20% 100VDC CER	28480	0160-5298
A7C53	0180-1746	5		CAPACITOR-FXD 15UF+-10% 20VDC TA	56289	150D156X9020B2
A7C54	0160-5298	8		CAPACITOR-FXD .01UF +-20% 100VDC CER	28480	0160-5298
A7C55	0160-5298	8		CAPACITOR-FXD .01UF +-20% 100VDC CER	28480	0160-5298
A7C56	0160-5657	3		CAPACITOR-FXD 1200PF +-1% 100VDC CER	28480	0160-5657
A7C57	0160-5298	8		CAPACITOR-FXD .01UF +-20% 100VDC CER	28480	0160-5298
A7C58	0160-5298	8		CAPACITOR-FXD .01UF +-20% 100VDC CER	28480	0160-5298
A7C59	0180-1746	5		CAPACITOR-FXD 15UF+-10% 20VDC TA	56289	150D156X9020B2
A7C60	0160-5657	3		CAPACITOR-FXD 1200PF +-1% 100VDC CER	28480	0160-5657
A7C61	0160-5298	8		CAPACITOR-FXD .01UF +-20% 100VDC CER	28480	0160-5298
A7C62	0160-5657	3		CAPACITOR-FXD 1200PF +-1% 100VDC CER	28480	0160-5657
A7C63	0160-5657	3		CAPACITOR-FXD 1200PF +-1% 100VDC CER	28480	0160-5657
A7C64	0160-5298	8		CAPACITOR-FXD .01UF +-20% 100VDC CER	28480	0160-5298
A7C65	0160-5298	8		CAPACITOR-FXD .01UF +-20% 100VDC CER	28480	0160-5298
A7C66	0160-4822	2	1	CAPACITOR-FXD 1000PF +-5% 100VDC CER	28480	0160-4822
A7C67	0180-0376	1		CAPACITOR-FXD 47UF 35VDC	28480	0180-0376
A7CR1	1901-0040	1	1	DIODE-SWITCHING 30V 50MA 2NS DO-35	28480	1901-0040
A7CR2	1901-0376	6	2	DIODE-GEN PRP 35V 50MA DO-35	28480	1901-0376
A7CR3	1901-0376	6		DIODE-GEN PRP 35V 50MA DO-35	28480	1901-0376
A7CR4	1901-0539	3	2	DIODE-SM SIG SCHOTTKY	28480	1901-0539
A7CR5	1901-0539	3		DIODE-SM SIG SCHOTTKY	28480	1901-0539

See introduction to this section for ordering information
*Indicates factory selected value

Table 6-2. 4945A Replaceable Parts (Cont'd)

Reference Designation	HP Part Number	C D	Qty	Description	Mfr Code	Mfr Part Number
A7J1	1251-8171	6	2	CONN-POST TYPE .100-PIN-SPCG 3-CONT	28480	1251-8171
A7J2	1251-6857	1	2	CONNECTOR 2-PIN M POST TYPE	28480	1251-6857
A7J3	1251-6857	1		CONNECTOR 2-PIN M POST TYPE	28480	1251-6857
A7J4	1251-8171	6		CONN-POST TYPE .100-PIN-SPCG 3-CONT	28480	1251-8171
A7JU1	1258-0141	8	4	JUMPER-REM	28480	1258-0141
A7JU2	1258-0141	8		JUMPER-REM	28480	1258-0141
A7JU3	1258-0141	8		JUMPER-REM	28480	1258-0141
A7JU4	1258-0141	8		JUMPER-REM	28480	1258-0141
A7P1	1251-7986	9	1	CONN-POST TYPE .100-PIN-SPCG 50-CONT	28480	1251-7986
A7Q1	1855-0205	1	1	TRANSISTOR J-FET P-CHAN D-MODE TO-72 SI	17856	VCR3P
A7Q2	1855-0305	2	1	TRANSISTOR J-FET 2N4117A N-CHAN D-MODE	17856	2N4117A
A7Q3	1853-0036	2	1	TRANSISTOR PNP SI PD=310MW FT=250MHZ	28480	1853-0036
A7R1	0699-0588	0	3	RESISTOR 18.171K .1% .125W F TC=0+-25	28480	0699-0588
A7R2	0699-0588	0		RESISTOR 18.171K .1% .125W F TC=0+-25	28480	0699-0588
A7R3	0698-8825	2	2	RESISTOR 681K 1% .125W F TC=0+-100	28480	0698-8825
A7R4	0699-0630	3	9	RESISTOR 19.1K .1% .125W F TC=0+-15	28480	0699-0630
A7R5	0699-0630	3		RESISTOR 19.1K .1% .125W F TC=0+-15	28480	0699-0630
A7R6	0699-0588	0		RESISTOR 18.171K .1% .125W F TC=0+-25	28480	0699-0588
A7R7	0698-0084	9	8	RESISTOR 2.15K 1% .125W F TC=0+-100	24546	C4-1/8-T0-2151-F
A7R8	0757-0420	3	1	RESISTOR 750 1% .125W F TC=0+-100	24546	C4-1/8-T0-751-F
A7R9	0698-8825	2		RESISTOR 681K 1% .125W F TC=0+-100	28480	0698-8825
A7R10	0699-0630	3		RESISTOR 19.1K .1% .125W F TC=0+-15	28480	0699-0630
A7R11	0699-0630	3		RESISTOR 19.1K .1% .125W F TC=0+-15	28480	0699-0630
A7R12	0699-0630	3		RESISTOR 19.1K .1% .125W F TC=0+-15	28480	0699-0630
A7R13	0757-0401	0	5	RESISTOR 100 1% .125W F TC=0+-100	24546	C4-1/8-T0-101-F
A7R14	0757-0462	3	2	RESISTOR 75K 1% .125W F TC=0+-100	24546	C4-1/8-T0-7502-F
A7R15	0757-0442	9	16	RESISTOR 10K 1% .125W F TC=0+-100	24546	C4-1/8-T0-1002-F
A7R16	0757-0442	9		RESISTOR 10K 1% .125W F TC=0+-100	24546	C4-1/8-T0-1002-F
A7R17	0757-0442	9		RESISTOR 10K 1% .125W F TC=0+-100	24546	C4-1/8-T0-1002-F
A7R18	0757-0401	0		RESISTOR 100 1% .125W F TC=0+-100	24546	C4-1/8-T0-101-F
A7R19	0757-0462	3		RESISTOR 75K 1% .125W F TC=0+-100	24546	C4-1/8-T0-7502-F
A7R20	0757-0442	9		RESISTOR 10K 1% .125W F TC=0+-100	24546	C4-1/8-T0-1002-F
A7R21	0698-0084	9		RESISTOR 2.15K 1% .125W F TC=0+-100	24546	C4-1/8-T0-2151-F
A7R21	0757-0442	9		RESISTOR 10K 1% .125W F TC=0+-100	24546	C4-1/8-T0-1002-F
A7R22	0698-3460	1	2	RESISTOR 422K 1% .125W F TC=0+-100	28480	0698-3460
A7R23	0683-3955	8	1	RESISTOR 3.9M 5% .25W FC TC=-900/+1100	01121	CB3955
A7R24	0757-0199	3	3	RESISTOR 21.5K 1% .125W F TC=0+-100	24546	C4-1/8-T0-2152-F
A7R25	0757-0199	3		RESISTOR 21.5K 1% .125W F TC=0+-100	24546	C4-1/8-T0-2152-F
A7R26	0698-3460	1		RESISTOR 422K 1% .125W F TC=0+-100	28480	0698-3460
A7R27	0757-0443	0	2	RESISTOR 11K 1% .125W F TC=0+-100	24546	C4-1/8-T0-1102-F
A7R28	0757-0290	5	2	RESISTOR 6.19K 1% .125W F TC=0+-100	19701	MF4C1/8-T0-6191-F
A7R29	0698-3162	0	1	RESISTOR 46.4K 1% .125W F TC=0+-100	24546	C4-1/8-T0-4642-F
A7R30	0757-0443	0		RESISTOR 11K 1% .125W F TC=0+-100	24546	C4-1/8-T0-1102-F
A7R31	0757-0442	9		RESISTOR 10K 1% .125W F TC=0+-100	24546	C4-1/8-T0-1002-F
A7R32	0757-0199	3		RESISTOR 21.5K 1% .125W F TC=0+-100	24546	C4-1/8-T0-2152-F
A7R33	0757-0401	0		RESISTOR 100 1% .125W F TC=0+-100	24546	C4-1/8-T0-101-F
A7R34	0757-0465	6	4	RESISTOR 100K 1% .125W F TC=0+-100	24546	C4-1/8-T0-1003-F
A7R35	0699-0630	3		RESISTOR 19.1K .1% .125W F TC=0+-15	28480	0699-0630
A7R36	0698-3157	3	1	RESISTOR 19.6K 1% .125W F TC=0+-100	24546	C4-1/8-T0-1962-F
A7R37	0698-7367	5	2	RESISTOR 78.028K .1% .125W F TC=0+-50	19701	MF4C1/8-T2-78028R-B
A7R38	0698-7367	5		RESISTOR 78.028K .1% .125W F TC=0+-50	19701	MF4C1/8-T2-78028R-B
A7R39	0699-0630	3		RESISTOR 19.1K .1% .125W F TC=0+-15	28480	0699-0630
A7R40	0699-0630	3		RESISTOR 19.1K .1% .125W F TC=0+-15	28480	0699-0630
A7R41	0699-0630	3		RESISTOR 19.1K .1% .125W F TC=0+-15	28480	0699-0630
A7R42	0698-4502	4	1	RESISTOR 64.9K 1% .125W F TC=0+-100	24546	C4-1/8-T0-6492-F
A7R43	0757-0442	9		RESISTOR 10K 1% .125W F TC=0+-100	24546	C4-1/8-T0-1002-F
A7R44	0757-0438	3	1	RESISTOR 5.11K 1% .125W F TC=0+-100	24546	C4-1/8-T0-5111-F
A7R45	0757-0442	9		RESISTOR 10K 1% .125W F TC=0+-100	24546	C4-1/8-T0-1002-F
A7R46	0757-0442	9		RESISTOR 10K 1% .125W F TC=0+-100	24546	C4-1/8-T0-1002-F
A7R47	0757-0442	9		RESISTOR 10K 1% .125W F TC=0+-100	24546	C4-1/8-T0-1002-F
A7R48	0757-0465	6		RESISTOR 100K 1% .125W F TC=0+-100	24546	C4-1/8-T0-1003-F
A7R49	0757-0460	1	1	RESISTOR 61.9K 1% .125W F TC=0+-100	24546	C4-1/8-T0-6192-F
A7R50	0757-0401	0		RESISTOR 100 1% .125W F TC=0+-100	24546	C4-1/8-T0-101-F
A7R51	0698-0084	9		RESISTOR 2.15K 1% .125W F TC=0+-100	24546	C4-1/8-T0-2151-F
A7R52	0757-0442	9		RESISTOR 10K 1% .125W F TC=0+-100	24546	C4-1/8-T0-1002-F
A7R53	0757-0465	6		RESISTOR 100K 1% .125W F TC=0+-100	24546	C4-1/8-T0-1003-F
A7R54	0757-0465	6		RESISTOR 100K 1% .125W F TC=0+-100	24546	C4-1/8-T0-1003-F
A7R55	0698-6946	4	6	RESISTOR 66.33K .1% .125W F TC=0+-50	28480	0698-6946
A7R56	0757-0442	9		RESISTOR 10K 1% .125W F TC=0+-100	24546	C4-1/8-T0-1002-F
A7R57	0757-0442	9		RESISTOR 10K 1% .125W F TC=0+-100	24546	C4-1/8-T0-1002-F
A7R58	0698-6946	4		RESISTOR 66.33K .1% .125W F TC=0+-50	28480	0698-6946
A7R59	0698-3457	6	6	RESISTOR 316K 1% .125W F TC=0+-100	28480	0698-3457
A7R60	0698-3457	6		RESISTOR 316K 1% .125W F TC=0+-100	28480	0698-3457
A7R61	0698-3457	6		RESISTOR 316K 1% .125W F TC=0+-100	28480	0698-3457
A7R62	0698-6946	4		RESISTOR 66.33K .1% .125W F TC=0+-50	28480	0698-6946
A7R63	0757-0442	9		RESISTOR 10K 1% .125W F TC=0+-100	24546	C4-1/8-T0-1002-F
A7R64	0698-6946	4		RESISTOR 66.33K .1% .125W F TC=0+-50	28480	0698-6946

See introduction to this section for ordering information
*Indicates factory selected value

Table 6-2. 4945A Replaceable Parts (Cont'd)

Reference Designation	HP Part Number	C D	Qty	Description	Mfr Code	Mfr Part Number
A7R65	0698-3457	6		RESISTOR 316K 1% .125W F TC=0+-100	28480	0698-3457
A7R66	0698-6946	4		RESISTOR 66.33K .1% .125W F TC=0+-50	28480	0698-6946
A7R67	0698-6946	4		RESISTOR 66.33K .1% .125W F TC=0+-50	28480	0698-6946
A7R68	0757-0442	9		RESISTOR 10K 1% .125W F TC=0+-100	24546	C4-1/8-T0-1002-F
A7R69	0698-3457	6		RESISTOR 316K 1% .125W F TC=0+-100	28480	0698-3457
A7R70	0698-3457	6		RESISTOR 316K 1% .125W F TC=0+-100	28480	0698-3457
A7R71	0757-0290	5		RESISTOR 6.19K 1% .125W F TC=0+-100	19701	MF4C1/8-T0-6191-F
A7R72	0698-0084	9		RESISTOR 2.15K 1% .125W F TC=0+-100	24546	C4-1/8-T0-2151-F
A7R73	0698-0084	9		RESISTOR 2.15K 1% .125W F TC=0+-100	24546	C4-1/8-T0-2151-F
A7R74	0698-0084	9		RESISTOR 2.15K 1% .125W F TC=0+-100	24546	C4-1/8-T0-2151-F
A7R75	0698-0084	9		RESISTOR 2.15K 1% .125W F TC=0+-100	24546	C4-1/8-T0-2151-F
A7R76	0698-0084	9		RESISTOR 2.15K 1% .125W F TC=0+-100	24546	C4-1/8-T0-2151-F
A7R77	0757-0401	0		RESISTOR 100 1% .125W F TC=0+-100	24546	C4-1/8-T0-101-F
A7R78	0757-0442	9		RESISTOR 10K 1% .125W F TC=0+-100	24546	C4-1/8-T0-1002-F
A7R79	0757-0424	7	1	RESISTOR 1.1K 1% .125W F TC=0+-100	24546	C4-1/8-T0-1101-F
A7R80	0698-3157	3		RESISTOR 19.6K 1% .125W F TC=0±100	28480	0698-3157
A7R102	2100-3109	2	3	RESISTOR-TRMR 2K 10% C SIDE-ADJ 17-TRN	02111	43P202
A7R103	2100-3109	2		RESISTOR-TRMR 2K 10% C SIDE-ADJ 17-TRN	02111	43P202
A7R203	2100-3109	2		RESISTOR-TRMR 2K 10% C SIDE-ADJ 17-TRN	02111	43P202
A7TP1	0360-1682	0	12	TERMINAL-STUD SGL-TUR PRESS-MTG	28480	0360-1682
A7TP2	0360-1682	0		TERMINAL-STUD SGL-TUR PRESS-MTG	28480	0360-1682
A7TP3	0360-1682	0		TERMINAL-STUD SGL-TUR PRESS-MTG	28480	0360-1682
A7TP4	0360-1682	0		TERMINAL-STUD SGL-TUR PRESS-MTG	28480	0360-1682
A7TP207	0360-1682	0		TERMINAL-STUD SGL-TUR PRESS-MTG	28480	0360-1682
A7TP303	0360-1682	0		TERMINAL-STUD SGL-TUR PRESS-MTG	28480	0360-1682
A7TP505	0360-1682	0		TERMINAL-STUD SGL-TUR PRESS-MTG	28480	0360-1682
A7TP506	0360-1682	0		TERMINAL-STUD SGL-TUR PRESS-MTG	28480	0360-1682
A7TP507	0360-1682	0		TERMINAL-STUD SGL-TUR PRESS-MTG	28480	0360-1682
A7TP600	0360-1682	0		TERMINAL-STUD SGL-TUR PRESS-MTG	28480	0360-1682
A7TP602	0360-1682	0		TERMINAL-STUD SGL-TUR PRESS-MTG	28480	0360-1682
A7TP807	0360-1682	0		TERMINAL-STUD SGL-TUR PRESS-MTG	28480	0360-1682
A7U102	1826-0785	1	6	IC OP AMP LOW-BIAS-H-IMPD DUAL 8-DIP-C	01295	TL072ACJG
A7U103	1826-0785	1		IC OP AMP LOW-BIAS-H-IMPD DUAL 8-DIP-C	01295	TL072ACJG
A7U104	1826-0792	0	1	IC COMPARATOR PRCN QUAD 14-DIP-C PKG	34371	HA1-4905-5
A7U107	1826-0785	1		IC OP AMP LOW-BIAS-H-IMPD DUAL 8-DIP-C	01295	TL072ACJG
A7U200	1820-1197	9	1	IC GATE TTL LS NAND QUAD 2-INP	01295	SN74LS00N
A7U201	1820-1211	8	1	IC GATE TTL LS EXCL-OR QUAD 2-INP	01295	SN74LS86N
A7U204	1826-0328	8	6	IC OP AMP GP DUAL 8-DIP-C PKG	07933	RV4558DE
A7U207	1826-0785	1		IC OP AMP LOW-BIAS-H-IMPD DUAL 8-DIP-C	01295	TL072ACJG
A7U300	1820-1282	3	2	IC FF TTL LS J-K BAR POS-EDGE-TRIG	01295	SN74LS109AN
A7U303	1826-0785	1		IC OP AMP LOW-BIAS-H-IMPD DUAL 8-DIP-C	01295	TL072ACJG
A7U304	1826-0740	8	1	IC SWITCH ANLG DUAL 16-DIP-C PKG	32293	IH5043CDE
A7U307	1826-0785	1		IC OP AMP LOW-BIAS-H-IMPD DUAL 8-DIP-C	01295	TL072ACJG
A7U400	1820-1443	8	1	IC CNTR TTL LS BIN ASYNCHRO	01295	SN74LS293N
A7U401	1826-0371	1	1	IC OP AMP LOW-BIAS-H-IMPD TO-99 PKG	27014	LF256H
A7U403	1820-0493	6	1	IC OP AMP GP 8-DIP-P PKG	27014	LM307N
A7U404	1826-0328	8		IC OP AMP GP DUAL 8-DIP-C PKG	07933	RV4558DE
A7U407	1826-0328	8		IC OP AMP GP DUAL 8-DIP-C PKG	07933	RV4558DE
A7U500	1820-1442	7	1	IC CNTR TTL LS DECD ASYNCHRO	01295	SN74LS290N
A7U501	1820-1203	8	1	IC GATE TTL LS AND TPL 3-INP	01295	SN74LS11N
A7U502	1820-1282	3		IC FF TTL LS J-K BAR POS-EDGE-TRIG	01295	SN74LS109AN
A7U600	1820-1420	1	1	IC CNTR TTL LS DIV-X-12 ASYNCHRO	01295	SN74LS92N
A7U601	1820-1991	1	1	IC CNTR TTL LS DECD DUAL 4-BIT	01295	SN74LS390N
A7U602	1820-1201	6	1	IC GATE TTL LS AND QUAD 2-INP	01295	SN74LS08N
A7U603	1820-1216	3	1	IC DCDR TTL LS 3-TO-8-LINE 3-INP	01295	SN74LS138N
A7U604	1826-0328	8		IC OP AMP GP DUAL 8-DIP-C PKG	07933	RV4558DE
A7U605	1826-0328	8		IC OP AMP GP DUAL 8-DIP-C PKG	07933	RV4558DE
A7U700	1820-0936	2	2	IC CNTR CMOS BIN SYNCHRO NEG-EDGE-TRIG	3L585	CD4024BE
A7U701	1820-0936	2		IC CNTR CMOS BIN SYNCHRO NEG-EDGE-TRIG	3L585	CD4024BE
A7U702	1820-1491	6	3	IC BFR TTL LS NON-INV HEX 1-INP	01295	SN74LS367AN
A7U703	1820-1419	8	1	IC COMPTR TTL LS MAGTD 4-BIT	01295	SN74LS85N
A7U707	1826-0328	8		IC OP AMP GP DUAL 8-DIP-C PKG	07933	RV4558DE
A7U800	1820-1491	6		IC BFR TTL LS NON-INV HEX 1-INP	01295	SN74LS367AN
A7U801	1820-1491	6		IC BFR TTL LS NON-INV HEX 1-INP	01295	SN74LS367AN
A7U802	1820-1050	9	1	IC FF TTL LS D-TYPE OCTL	01295	SN74LS377N
A7VR1	1990-0449	1	1	OPTO-ISOLATOR LED-PCNDCT IF=50MA-MAX	03911	CLM8000
	1480-0116	8	2	PIN-GRV .062-IN-DIA .25-IN-LG STL	28480	1480-0116
	4040-0747	2	2	EXTR-PC BD GRA POLYC .062-BD-THKNS	28480	4040-0747
	5080-8544	8	1	A7-ID LABEL	28480	5080-8544

See introduction to this section for ordering information
*Indicates factory selected value

Table 6-2. 4945A Replaceable Parts (Cont'd)

Reference Designation	HP Part Number	C D	Qty	Description	Mfr Code	Mfr Part Number
A8	04945-60008	0	1	FREQ COUNTER	28480	04945-60008
A8C1	0160-5298	8	22	CAPACITOR-FXD .01UF +-20% 100VDC CER	28480	0160-5298
A8C2	0160-5298	8		CAPACITOR-FXD .01UF +-20% 100VDC CER	28480	0160-5298
A8C3	0180-0383	2	1	CAPACITOR-FXD .68UF ±10% 35VDC TA	28480	0180-0373
A8C4	0160-5298	8		CAPACITOR-FXD .01UF +-20% 100VDC CER	28480	0160-5298
A8C5	0160-2257	3	3	CAPACITOR-FXD 10PF +-5% 500VDC CER 0+-60	28480	0160-2257
A8C6	0160-5298	8		CAPACITOR-FXD .01UF +-20% 100VDC CER	28480	0160-5298
A8C7	0160-2257	3		CAPACITOR-FXD 10PF +-5% 500VDC CER 0+-60	28480	0160-2257
A8C8	0160-5298	8		CAPACITOR-FXD .01UF +-20% 100VDC CER	28480	0160-5298
A8C9	0160-5298	8		CAPACITOR-FXD .01UF +-20% 100VDC CER	28480	0160-5298
A8C10	0160-5298	8		CAPACITOR-FXD .01UF +-20% 100VDC CER	28480	0160-5298
A8C11	0180-1974	1	1	CAPACITOR-FXD .10UF ±20% 35V TA	28480	0180-1974
A8C12	0160-2257	3		CAPACITOR-FXD 10PF +-5% 500VDC CER 0+-60	28480	0160-2257
A8C13	0160-5298	8		CAPACITOR-FXD .01UF +-20% 100VDC CER	28480	0160-5298
A8C14	0160-5298	8		CAPACITOR-FXD .01UF +-20% 100VDC CER	28480	0160-5298
A8C15	0160-5298	8		CAPACITOR-FXD .01UF +-20% 100VDC CER	28480	0160-5298
A8C16	0160-5298	8		CAPACITOR-FXD .01UF +-20% 100VDC CER	28480	0160-5298
A8C17	0160-5298	8		CAPACITOR-FXD .01UF +-20% 100VDC CER	28480	0160-5298
A8C18	0160-5298	8		CAPACITOR-FXD .01UF +-20% 100VDC CER	28480	0160-5298
A8C19	0160-5298	8		CAPACITOR-FXD .01UF +-20% 100VDC CER	28480	0160-5298
A8C20	0160-4426	2	2	CAPACITOR-FXD .01UF +-1% 100VDC CER	28480	0160-4426
A8C21	0160-4426	2		CAPACITOR-FXD .01UF +-1% 100VDC CER	28480	0160-4426
A8C22	0160-5298	8		CAPACITOR-FXD .01UF +-20% 100VDC CER	28480	0160-5298
A8C23	0160-5298	8		CAPACITOR-FXD .01UF +-20% 100VDC CER	28480	0160-5298
A8C24	0160-5298	8		CAPACITOR-FXD .01UF +-20% 100VDC CER	28480	0160-5298
A8C25	0180-0374	3	3	CAPACITOR-FXD 10UF+-10% 20VDC TA	56289	150D106X9020B2
A8C26	0160-5298	8		CAPACITOR-FXD .01UF +-20% 100VDC CER	28480	0160-5298
A8C27	0180-0374	3		CAPACITOR-FXD 10UF+-10% 20VDC TA	56289	150D106X9020B2
A8C28	0160-5298	8		CAPACITOR-FXD .01UF +-20% 100VDC CER	28480	0160-5298
A8C29	0180-0374	3		CAPACITOR-FXD 10UF+-10% 20VDC TA	56289	150D106X9020B2
A8C30	0160-5298	8		CAPACITOR-FXD .01UF +-20% 100VDC CER	28480	0160-5298
A8C31	0160-5298	8		CAPACITOR-FXD .01UF +-20% 100VDC CER	28480	0160-5298
A8C32	0160-5298	8		CAPACITOR-FXD .01UF +-20% 100VDC CER	28480	0160-5298
A8CR1	1901-0518	8	3	DIODE-SM SIG SCHOTTKY	28480	1901-0518
A8CR2	1901-0040	1	1	DIODE-SWITCHING 30V 50MA 2NS DO-35	28480	1901-0040
A8CR3	1901-0518	8		DIODE-SM SIG SCHOTTKY	28480	1901-0518
A8CR4	1901-0518	8		DIODE-SM SIG SCHOTTKY	28480	1901-0518
A8CR5	1902-0777	3	1	DIODE-ZNR 1N825 6.2V 5% DO-7 PD=.4W	04713	1N825
A8CR6	1901-0050	3	2	DIODE SWITCHING 80V 200MA 2NS DO-35	28480	1901-0050
A8CR7	1901-0050	3		DIODE SWITCHING 80V 200MA 2NS DO-35	28480	1901-0050
A8P1	1251-7506	9	1	CONN-POST TYPE .100-PIN-SPCG 120-CONT	28480	1251-7506
A8R1	0757-0438	3	3	RESISTOR 5.11K 1% .125W F TC=0+-100	24546	C4-1/8-T0-5111-F
A8R2	0683-1855	3	3	RESISTOR 1.8M 5% .25W FC TC=-900/+1100	01121	CB1855
A8R3	0757-0465	6	6	RESISTOR 100K 1% .125W F TC=0+-100	24546	C4-1/8-T0-1003-F
A8R4	0757-0442	9	4	RESISTOR 10K 1% .125W F TC=0+-100	24546	C4-1/8-T0-1002-F
A8R5	0698-3453	2	2	RESISTOR 196K 1% .125W F TC=0±100	28480	0698-3453
A8R6	0757-0438	3		RESISTOR 5.11K 1% .125W F TC=0+-100	24546	C4-1/8-T0-5111-F
A8R7	0757-0465	6		RESISTOR 100K 1% .125W F TC=0+-100	24546	C4-1/8-T0-1003-F
A8R8	0698-3153	9	1	RESISTOR 3.83K 1% .125W F TC=0±100	28480	0698-3153
A8R9	0698-3453	2		RESISTOR 196K 1% .125W F TC=0±100	28480	0698-3453
A8R10	0757-0438	3		RESISTOR 5.11K 1% .125W F TC=0+-100	24546	C4-1/8-T0-5111-F
A8R11	0757-0394	0	4	RESISTOR 51.1 1% .125W F TC=0+-100	24546	C4-1/8-T0-51R1-F
A8R12	0757-0394	0		RESISTOR 51.1 1% .125W F TC=0+-100	24546	C4-1/8-T0-51R1-F
A8R13	0757-0442	9		RESISTOR 10K 1% .125W F TC=0+-100	24546	C4-1/8-T0-1002-F
A8R14	0698-3454	3	1	RESISTOR 215K 1% .125W F TC=0+-100	24546	C4-1/8-T0-2153-F
A8R15	0757-0438	6		RESISTOR 5.11K 1% .125W F TC=0+-100	24546	C4-1/8-T0-5111-F
A8R16	0757-0438	6		RESISTOR 5.11K 1% .125W F TC=0+-100	24546	C4-1/8-T0-5111-F
A8R17	0757-3158			RESISTOR 5.11K 1% .125W F TC=0±100	24546	C4-1/8-T0-5111-F
A8R18	0757-0441	8	1	RESISTOR 8.25K 1% .125W F TC=0+-100	24546	C4-1/8-T0-8251-F
A8R19	0698-6360	6	2	RESISTOR 19K .1% .125W F TC=0+-25	28480	0698-6360
A8R20	0698-6360	6		RESISTOR 10K .1% .125W F TC=0+-25	28480	0698-6360
A8R21	0757-0442	9		RESISTOR 10K 1% .125W F TC=0+-100	24546	C4-1/8-T0-1002-F
A8R22	0757-0439	6		RESISTOR 6.81K 1% .125W F TC=0+-100	28480	0757-0439
A8R23	0757-0439	6		RESISTOR 6.81K 1% .125W F TC=0+-100	28480	0757-0439
A8R24	0757-0274	5	1	RESISTOR 1.21K 1% .125W F TC=0+-100	24546	C4-1/8-T0-1211-F
A8R25	0757-0442	9		RESISTOR 10K 1% .125W F TC=0+-100	24546	C4-1/8-T0-1002-F
A8R26	0698-3160	8	3	RESISTOR 31.6K 1% .125W F TC=0+-100	24546	C4-1/8-T0-3162-F
A8R27	0698-6879	2	4	RESISTOR 15.8K .5% .125W F TC=0+-50	28480	0698-6879
A8R28	0698-6879	2		RESISTOR 15.8K .5% .125W F TC=0+-50	28480	0698-6879
A8R29	0698-0084	9	4	RESISTOR 2.15K 1% .125W F TC=0+-100	24546	C4-1/8-T0-2151-F
A8R30	0698-6879	2		RESISTOR 15.8K .5% .125W F TC=0+-50	28480	0698-6879
A8R31	0698-3160	8		RESISTOR 31.6K 1% .125W F TC=0+-100	24546	C4-1/8-T0-3162-F

See introduction to this section for ordering information
*Indicates factory selected value

Table 6-2. 4945A Replaceable Parts (Cont'd)

Reference Designation	HP Part Number	C D	Qty	Description	Mfr Code	Mfr Part Number
A8R32	0698-6879	2		RESISTOR 15.0K .5% .125W F TC=0+-50	28480	0698-6879
A8R33	0698-6938	4	1	RESISTOR 196K .5% .125W F TC=0+-50	28480	0698-6938
A8R34	0698-3160	8		RESISTOR 31.6K 1% .125W F TC=0+-100	24546	C4-1/8-T0-3162-F
A8R35	0698-0084	9		RESISTOR 2.15K 1% .125W F TC=0+-100	24546	C4-1/8-T0-2151-F
A8R36	0698-0084	9		RESISTOR 2.15K 1% .125W F TC=0+-100	24546	C4-1/8-T0-2151-F
A8R37	0698-0084	9		RESISTOR 2.15K 1% .125W F TC=0+-100	24546	C4-1/8-T0-2151-F
A8R38	0757-0290	5	3	RESISTOR 6.19K 1% .125W F TC=0+-100	19701	MF4C1/8-T0-6191-F
A8R39	0757-0290	5		RESISTOR 6.19K 1% .125W F TC=0+-100	19701	MF4C1/8-T0-6191-F
A8R40	0757-0290	5		RESISTOR 6.19K 1% .125W F TC=0+-100	19701	MF4C1/8-T0-6191-F
A8R41	0757-0394	0		RESISTOR 51.1 1% .125W F TC=0+-100	24546	C4-1/8-T0-51R1-F
A8R42	0757-0394	0		RESISTOR 51.1 1% .125W F TC=0+-100	24546	C4-1/8-T0-51R1-F
A8R43	0698-3156			RESISTOR 14.7K 1% .125W F TC=0±100	28480	0698-3156
A8R44	0698-3156			RESISTOR 14.7K 1% .125W F TC=0±100	28480	0698-3156
A8R45	0698-3156			RESISTOR 14.7K 1% .125W F TC=0±100	28480	0698-3156
A8R102	1810-0368	3	1	NETWORK-RES 6-SIP10.0K OHM X 5	01121	206A103
A8R201	1810-0280	8	1	NETWORK-RES 10-SIP10.0K OHM X 9	01121	210A103
A8TP1	1251-4672	4	1	CONNECTOR 10-PIN M POST TYPE	28480	1251-4672
A8U101	1820-1855	6	2	IC CNTR CMOS	04713	MC14534BCP
A8U102	1820-1855	6		IC CNTR CMOS	04713	MC14534BCP
A8U103	1820-1282	3	1	IC FF TTL LS J-K BAR POS-EDGE-TRIG	01295	SN74LS109AN
A8U104	1820-1197	9	1	IC GATE TTL LS NAND QUAD 2-INP	01295	SN74LS00N
A8U105	1820-1199	1	1	IC INV TTL LS HEX 1-INP	01295	SN74LS04N
A8U201	1826-0639	4	3	IC CONV 8-B-D/A 16-DIP-P PKG	24355	AD7524JN
A8U203	1820-1470	1	1	IC MUXR/DATA-SEL TTL LS 2-TO-1-LINE QUAD	01295	SN74LS157N
A8U204	1820-1201	6	1	IC GATE TTL LS AND QUAD 2-INP	01295	SN74LS08N
A8U205	1826-0138	8	2	IC COMPARATOR GP QUAD 14-DIP-P PKG	01295	LM339N
A8U300	1826-0522	4	1	IC OP AMP LOW-BIAS-H-IMPD QUAD 14-DIP-P	01295	TL074CN
A8U301	1826-0639	4		IC CONV 8-B-D/A 16-DIP-P PKG	24355	AD7524JN
A8U302	1820-1568	8	1	IC BFR TTL LS BUS QUAD	01295	SN74LS125AN
A8U303	1820-1858	9	2	IC FF TTL LS D-TYPE OCTL	01295	SN74LS377N
A8U304	1820-1491	6	1	IC BFR TTL LS NON-INV HEX 1-INP	01295	SN74LS367AN
A8U305	1826-0785	1	2	IC OP AMP LOW-BIAS-H-IMPD DUAL 8-DIP-C	01295	TL072ACJG
A8U400	1820-1208	3	1	IC GATE TTL LS OR QUAD 2-INP	01295	SN74LS32N
A8U401	1826-0639	4		IC CONV 8-B-D/A 16-DIP-P PKG	24355	AD7524JN
A8U402	1820-1437	0	2	IC MV TTL LS MONOSTBL DUAL	01295	SN74LS221N
A8U403	1820-1216	3	1	IC DCDR TTL LS 3-TO-8-LINE 3-INP	01295	SN74LS138N
A8U405	1826-0785	1		IC OP AMP LOW-BIAS-H-IMPD DUAL 8-DIP-C	01295	TL072ACJG
A8U501	1820-1858	9		IC FF TTL LS D-TYPE OCTL	01295	SN74LS377N
A8U502	1820-1437	0		IC MV TTL LS MONOSTBL DUAL	01295	SN74LS221N
A8U503	1820-1419	8	1	IC COMPTR TTL LS MAGTD 4-BIT	01295	SN74LS85N
A8U505	1826-0138	8		IC COMPARATOR GP QUAD 14-DIP-P PKG	01295	LM339N
	1480-0116	8	2	PIN-GRV .062-IN-DIA .25-IN-LG STL	28480	1480-0116
	4040-0747	2	2	EXTR-PC BD GRA POLYC .062-BD-THKNS	28480	4040-0747
	5080-8545	9	1	A8-ID LABEL	28480	5080-8545

See introduction to this section for ordering information
*Indicates factory selected value

Table 6-2. 4945A Replaceable Parts (Cont'd)

Reference Designation	HP Part Number	C D	Qty	Description	Mfr Code	Mfr Part Number
A9	04945-60009	1	1	TRANSIENTS	28480	04945-60009
A9C1	0160-5298	8	30	CAPACITOR-FXD .01UF +-20% 100VDC CER	28480	0160-5298
A9C2	0160-5298	8		CAPACITOR-FXD .01UF +-20% 100VDC CER	28480	0160-5298
A9C3	0180-0291	3	1	CAPACITOR-FXD 1UF+-10% 35VDC TA	56289	150D105X9035A2
A9C4	0160-5298	8		CAPACITOR-FXD .01UF +-20% 100VDC CER	28480	0160-5298
A9C5	0160-5298	8		CAPACITOR-FXD .01UF +-20% 100VDC CER	28480	0160-5298
A9C6	0160-4788	9	2	CAPACITOR-FXD 18PF +-5% 100VDC CER 0+-30	28480	0160-4788
A9C7	0160-5298	8		CAPACITOR-FXD .01UF +-20% 100VDC CER	28480	0160-5298
A9C8	0160-5298	8		CAPACITOR-FXD .01UF +-20% 100VDC CER	28480	0160-5298
A9C9	0160-4426	2	3	CAPACITOR-FXD .01UF +-1% 100VDC CER	28480	0160-4426
A9C10	0160-5695	9	3	CAPACITOR-FXD .1UF +-1% 200VDC MET-POLYC	28480	0160-5695
A9C11	0160-5695	9		CAPACITOR-FXD .1UF +-1% 200VDC MET-POLYC	28480	0160-5695
A9C12	0160-5695	9		CAPACITOR-FXD .1UF +-1% 200VDC MET-POLYC	28480	0160-5695
A9C13	0160-4788	9		CAPACITOR-FXD 18PF +-5% 100VDC CER 0+-30	28480	0160-4788
A9C14	0160-5298	8		CAPACITOR-FXD .01UF +-20% 100VDC CER	28480	0160-5298
A9C15	0160-5298	8		CAPACITOR-FXD .01UF +-20% 100VDC CER	28480	0160-5298
A9C16	0160-5298	8		CAPACITOR-FXD .01UF +-20% 100VDC CER	28480	0160-5298
A9C17	0160-5298	8		CAPACITOR-FXD .01UF +-20% 100VDC CER	28480	0160-5298
A9C18	0160-5298	8		CAPACITOR-FXD .01UF +-20% 100VDC CER	28480	0160-5298
A9C19	0160-5298	8		CAPACITOR-FXD .01UF +-20% 100VDC CER	28480	0160-5298
A9C20	0160-5298	8		CAPACITOR-FXD .01UF +-20% 100VDC CER	28480	0160-5298
A9C21	0160-5298	8		CAPACITOR-FXD .01UF +-20% 100VDC CER	28480	0160-5298
A9C22	0160-5298	8		CAPACITOR-FXD .01UF +-20% 100VDC CER	28480	0160-5298
A9C23	0160-5298	8		CAPACITOR-FXD .01UF +-20% 100VDC CER	28480	0160-5298
A9C24	0160-5298	8		CAPACITOR-FXD .01UF +-20% 100VDC CER	28480	0160-5298
A9C25	0160-5298	8		CAPACITOR-FXD .01UF +-20% 100VDC CER	28480	0160-5298
A9C26	0160-5298	8		CAPACITOR-FXD .01UF +-20% 100VDC CER	28480	0160-5298
A9C27	0160-5298	8		CAPACITOR-FXD .01UF +-20% 100VDC CER	28480	0160-5298
A9C28	0160-5298	8		CAPACITOR-FXD .01UF +-20% 100VDC CER	28480	0160-5298
A9C29	0160-5298	8		CAPACITOR-FXD .01UF +-20% 100VDC CER	28480	0160-5298
A9C30	0180-0374	3	5	CAPACITOR-FXD 10UF+-10% 20VDC TA	56289	150D106X9020B2
A9C31	0160-5298	8		CAPACITOR-FXD .01UF +-20% 100VDC CER	28480	0160-5298
A9C32	0160-5298	8		CAPACITOR-FXD .01UF +-20% 100VDC CER	28480	0160-5298
A9C33	0160-5298	8		CAPACITOR-FXD .01UF +-20% 100VDC CER	28480	0160-5298
A9C34	0160-5298	8		CAPACITOR-FXD .01UF +-20% 100VDC CER	28480	0160-5298
A9C35	0160-5298	8		CAPACITOR-FXD .01UF +-20% 100VDC CER	28480	0160-5298
A9C36	0160-4426	2		CAPACITOR-FXD .01UF +-1% 100VDC CER	28480	0160-4426
A9C37	0160-4426	2		CAPACITOR-FXD .01UF +-1% 100VDC CER	28480	0160-4426
A9C38	0160-5298	8		CAPACITOR-FXD .01UF +-20% 100VDC CER	28480	0160-5298
A9C39	0160-0161	4	1	CAPACITOR-FXD .01UF +-10% 200VDC POLYE	28480	0160-0161
A9C40	0160-0162	5	2	CAPACITOR-FXD .022UF +-10% 200VDC POLYE	28480	0160-0162
A9C41	0160-5298	8		CAPACITOR-FXD .01UF +-20% 100VDC CER	28480	0160-5298
A9C42	0160-5298	8		CAPACITOR-FXD .01UF +-20% 100VDC CER	28480	0160-5298
A9C43	0160-0578	7	1	CAPACITOR-FXD .047UF +-1% 50VDC	28480	0160-0578
A9C44	0160-0970	3	1	CAPACITOR-FXD .47UF +-10% 80VDC POLYE	28480	0160-0970
A9C45	0180-0374	3		CAPACITOR-FXD 10UF+-10% 20VDC TA	56289	150D106X9020B2
A9C46	0180-0374	3		CAPACITOR-FXD 10UF+-10% 20VDC TA	56289	150D106X9020B2
A9C47	0180-0374	3		CAPACITOR-FXD 10UF+-10% 20VDC TA	56289	150D106X9020B2
A9C50	0160-0162	5		CAPACITOR-FXD .022UF +-10% 200VDC POLYE	28480	0160-0162
A9C51	0180-0374	3		CAPACITOR-FXD 10UF+-10% 20VDC TA	56289	150D106X9020B2
A9CR1	1902-0686	3	2	DIODE-ZNR 6.2V 2% DO-7 PD=.4W TC=+.002%	04713	1N825
A9CR2	1901-0518	8	4	DIODE-SM SIG SCHOTTKY	28480	1901-0518
A9CR3	1901-0050	3	2	DIODE-SWITCHING 80V 200MA 2NS DO-35	28480	1901-0050
A9CR4	1901-0050	3		DIODE-SWITCHING 80V 200MA 2NS DO-35	28480	1901-0050
A9CR5	1901-0518	8		DIODE-SM SIG SCHOTTKY	28480	1901-0518
A9CR6	1901-0518	8		DIODE-SM SIG SCHOTTKY	28480	1901-0518
A9CR7	1901-0518	8		DIODE-SM SIG SCHOTTKY	28480	1901-0518
A9CR8	1902-0686	3		DIODE-ZNR 6.2V 2% DO-7 PD=.4W TC=+.002%	04713	1N825
A9CR9	1902-0953	7	1	DIODE-ZNR 6.2V 5% DO-35 PD=.4W TC=+.353%	28480	1902-0953
A9CR13	1902-0958	2	1	DIODE-ZNR 10V 5% DO-35 PD=.4W TC=+.075%	28480	1902-0958
A9J1	1200-0607	0	1	SOCKET-IC 16-CONT DIP DIP-SLDR	28480	1200-0607
A9J2	1251-8129	4	1	CONN-POST TYPE .100-PIN-SPCG 4-CONT	28480	1251-8129
A9J3	1251-8171	6	2	CONN-POST TYPE .100-PIN-SPCG 3-CONT	28480	1251-8171
A9J4	1251-8171	6		CONN-POST TYPE .100-PIN-SPCG 3-CONT	28480	1251-8171
A9JU1	1251-4787	2	1	SHUNT-DIP 8-POSITION	28480	1251-4787
A9JU3	1258-0141	8	2	JUMPER-REM	28480	1258-0141
A9JU4	1258-0141	8		JUMPER-REM	28480	1258-0141
A9P1	1251-7506	9	1	CONN-POST TYPE .100-PIN-SPCG 120-CONT	28480	1251-7506
A9Q1	1854-0071	7	7	TRANSISTOR NPN SI PD=300MW FT=200MHZ	28480	1854-0071
A9Q2	1854-0071	7		TRANSISTOR NPN SI PD=300MW FT=200MHZ	28480	1854-0071
A9Q3	1854-0071	7		TRANSISTOR NPN SI PD=300MW FT=200MHZ	28480	1854-0071
A9Q4	1854-0071	7		TRANSISTOR NPN SI PD=300MW FT=200MHZ	28480	1854-0071
A9Q6	1854-0071	7		TRANSISTOR NPN SI PD=300MW FT=200MHZ	28480	1854-0071

See introduction to this section for ordering information
*Indicates factory selected value

Table 6-2. 4945A Replaceable Parts (Cont'd)

Reference Designation	HP Part Number	C D	Qty	Description	Mfr Code	Mfr Part Number
A9Q7	1854-0071	7		TRANSISTOR NPN SI PD=300MW FT=200MHZ	28480	1854-0071
A9Q8	1853-0036	2	1	TRANSISTOR PNP SI PD=310MW FT=250MHZ	28480	1853-0036
A9Q9	1854-0071	7		TRANSISTOR NPN SI PD=300MW FT=200MHZ	28480	1854-0071
A9R1	0757-0394	0	12	RESISTOR 51.1 1% .125W F TC=0+-100	24546	C4-1/8-T0-51R1-F
A9R2	0757-0394	0		RESISTOR 51.1 1% .125W F TC=0+-100	24546	C4-1/8-T0-51R1-F
A9R3	0757-0274	5	1	RESISTOR 1.21K 1% .125W F TC=0+-100	24546	C4-1/8-T0-1211-F
A9R4	0698-6362	8	2	RESISTOR 1K .1% .125W F TC=0+-25	28480	0698-6362
A9R5	0683-1855	3	2	RESISTOR 1.8M 5% .25W FC TC=-900/+1100	01121	CB1855
A9R6	0757-0438	3	5	RESISTOR 5.11K 1% .125W F TC=0+-100	24546	C4-1/8-T0-5111-F
A9R7	0757-0394	0		RESISTOR 51.1 1% .125W F TC=0+-100	24546	C4-1/8-T0-51R1-F
A9R8	0757-0394	0		RESISTOR 51.1 1% .125W F TC=0+-100	24546	C4-1/8-T0-51R1-F
A9R9	0757-0467	8	1	RESISTOR 121K 1% .125W F TC=0+-100	24546	C4-1/8-T0-1213-F
A9R10	0698-6360	6	22	RESISTOR 10K .1% .125W F TC=0+-25	28480	0698-6360
A9R11	0698-6360	6		RESISTOR 10K .1% .125W F TC=0+-25	28480	0698-6360
A9R12	0698-6360	6		RESISTOR 10K .1% .125W F TC=0+-25	28480	0698-6360
A9R13	0698-6360	6		RESISTOR 10K .1% .125W F TC=0+-25	28480	0698-6360
A9R14	0698-6360	6		RESISTOR 10K .1% .125W F TC=0+-25	28480	0698-6360
A9R15	0757-0200	7	2	RESISTOR 5.62K 1% .125W F TC=0+-100	24546	C4-1/8-T0-5621-F
A9R16	0757-0200	7		RESISTOR 5.62K 1% .125W F TC=0+-100	24546	C4-1/8-T0-5621-F
A9R17	0757-0428	1	1	RESISTOR 1.62K 1% .125W F TC=0+-100	24546	C4-1/8-T0-1621-F
A9R18	0698-3159	5	2	RESISTOR 26.1K 1% .125W F TC=0+-100	24546	C4-1/8-T0-2612-F
A9R19	0698-3159	5		RESISTOR 26.1K 1% .125W F TC=0+-100	24546	C4-1/8-T0-2612-F
A9R20	0757-0438	3		RESISTOR 5.11K 1% .125W F TC=0+-100	24546	C4-1/8-T0-5111-F
A9R21	0699-0273	0	5	RESISTOR 2.15K .1% .125W F TC=0+-25	28480	0699-0273
A9R22	0699-0273	0		RESISTOR 2.15K .1% .125W F TC=0+-25	28480	0699-0273
A9R23	0698-6360	6		RESISTOR 10K .1% .125W F TC=0+-25	28480	0698-6360
A9R24	0757-0465	6	2	RESISTOR 100K 1% .125W F TC=0+-100	24546	C4-1/8-T0-1003-F
A9R25	0698-8799	9	2	RESISTOR 21.5K .1% .125W F TC=0+-25	28480	0698-8799
A9R26	0698-6360	6		RESISTOR 10K .1% .125W F TC=0+-25	28480	0698-6360
A9R27	0683-1855	3		RESISTOR 1.8M 5% .25W FC TC=-900/+1100	01121	CB1855
A9R29	0757-0394	0		RESISTOR 51.1 1% .125W F TC=0+-100	24546	C4-1/8-T0-51R1-F
A9R30	0757-0394	0		RESISTOR 51.1 1% .125W F TC=0+-100	24546	C4-1/8-T0-51R1-F
A9R31	0757-0394	0		RESISTOR 51.1 1% .125W F TC=0+-100	24546	C4-1/8-T0-51R1-F
A9R32	0757-0438	3		RESISTOR 5.11K 1% .125W F TC=0+-100	24546	C4-1/8-T0-5111-F
A9R33	0698-6360	6		RESISTOR 10K .1% .125W F TC=0+-25	28480	0698-6360
A9R34	0757-0447	4	1	RESISTOR 16.2K 1% .125W F TC=0+-100	24546	C4-1/8-T0-1622-F
A9R35	0698-6360	6		RESISTOR 10K .1% .125W F TC=0+-25	28480	0698-6360
A9R36	0698-0082	7	1	RESISTOR 464 1% .125W F TC=0+-100	24546	C4-1/8-T0-4640-F
A9R37	0757-0438	3		RESISTOR 5.11K 1% .125W F TC=0+-100	24546	C4-1/8-T0-5111-F
A9R38	0757-0394	0		RESISTOR 51.1 1% .125W F TC=0+-100	24546	C4-1/8-T0-51R1-F
A9R39	0757-0394	0		RESISTOR 51.1 1% .125W F TC=0+-100	24546	C4-1/8-T0-51R1-F
A9R40	0757-0394	0		RESISTOR 51.1 1% .125W F TC=0+-100	24546	C4-1/8-T0-51R1-F
A9R41	0698-6360	6		RESISTOR 10K .1% .125W F TC=0+-25	28480	0698-6360
A9R42	0698-8799	9		RESISTOR 21.5K .1% .125W F TC=0+-25	28480	0698-8799
A9R43	0698-6360	6		RESISTOR 10K .1% .125W F TC=0+-25	28480	0698-6360
A9R44	0698-3156	2	2	RESISTOR 14.7K 1% .125W F TC=0+-100	24546	C4-1/8-T0-1472-F
A9R45	0757-0438	3		RESISTOR 5.11K 1% .125W F TC=0+-100	24546	C4-1/8-T0-5111-F
A9R46	0698-6362	8		RESISTOR 1K .1% .125W F TC=0+-25	28480	0698-6362
A9R47	0698-8827	4	1	RESISTOR 1M 1% .125W F TC=0+-100	28480	0698-8827
A9R48	0757-0290	5	1	RESISTOR 6.19K 1% .125W F TC=0+-100	19701	MF4C1/8-T0-6191-F
A9R49	0699-0273	0		RESISTOR 2.15K .1% .125W F TC=0+-25	28480	0699-0273
A9R50	0757-0317	7	1	RESISTOR 1.33K 1% .125W F TC=0+-100	24546	C4-1/8-T0-1331-F
A9R51	0698-8638	5	1	RESISTOR 3.16K .1% .125W F TC=0+-25	28480	0698-8638
A9R52	0699-0273	0		RESISTOR 2.15K .1% .125W F TC=0+-25	28480	0699-0273
A9R53	0698-6360	6		RESISTOR 10K .1% .125W F TC=0+-25	28480	0698-6360
A9R54	0757-0394	0		RESISTOR 51.1 1% .125W F TC=0+-100	24546	C4-1/8-T0-51R1-F
A9R55	0757-0394	0		RESISTOR 51.1 1% .125W F TC=0+-100	24546	C4-1/8-T0-51R1-F
A9R57	0757-0416	7	1	RESISTOR 511 1% .125W F TC=0+-100	24546	C4-1/8-T0-511R-F
A9R58	0757-0466	7	1	RESISTOR 110K 1% .125W F TC=0+-100	24546	C4-1/8-T0-1103-F
A9R59	0698-3453	2	2	RESISTOR 196K 1% .125W F TC=0+-100	24546	C4-1/8-T0-1963-F
A9R60	0698-3154	0	1	RESISTOR 4.22K 1% .125W F TC=0+-100	24546	C4-1/8-T0-4221-F
A9R64	0757-0461	2	1	RESISTOR 68.1K 1% .125W F TC=0+-100	24546	C4-1/8-T0-6812-F
A9R65	0698-3156	2		RESISTOR 14.7K 1% .125W F TC=0+-100	24546	C4-1/8-T0-1472-F
A9R66	0698-3157	3	2	RESISTOR 19.6K 1% .125W F TC=0+-100	24546	C4-1/8-T0-1962-F
A9R67	0698-6360	6		RESISTOR 10K .1% .125W F TC=0+-25	28480	0698-6360
A9R68	0757-0288	1	1	RESISTOR 9.09K 1% .125W F TC=0+-100	19701	MF4C1/8-T0-9091-F
A9R69	0698-3438	3	1	RESISTOR 147 1% .125W F TC=0+-100	24546	C4-1/8-T0-147R-F
A9R70	0698-3160	8	2	RESISTOR 31.6K 1% .125W F TC=0+-100	24546	C4-1/8-T0-3162-F
A9R71	0698-6360	6		RESISTOR 10K .1% .125W F TC=0+-25	28480	0698-6360
A9R72	0698-6360	6		RESISTOR 10K .1% .125W F TC=0+-25	28480	0698-6360
A9R73	0698-6360	6		RESISTOR 10K .1% .125W F TC=0+-25	28480	0698-6360
A9R74	0698-3450	9	1	RESISTOR 42.2K 1% .125W F TC=0+-100	24546	C4-1/8-T0-4222-F
A9R75	0698-6360	6		RESISTOR 10K .1% .125W F TC=0+-25	28480	0698-6360
A9R76	0757-0430	9	1	RESISTOR 90.9 1% .125W F TC=0+-100	24546	C4-1/8-T0-90R9-F
A9R77	0698-6360	6		RESISTOR 10K .1% .125W F TC=0+-25	28480	0698-6360
A9R78	0698-3266	5	1	RESISTOR 237K 1% .125W F TC=0+-100	24546	C4-1/8-T0-2373-F
A9R79	0698-3158	4	1	RESISTOR 23.7K 1% .125W F TC=0+-100	24546	C4-1/8-T0-2372-F

See introduction to this section for ordering information
*Indicates factory selected value

Table 6-2. 4945A Replaceable Parts (Cont'd)

Reference Designation	HP Part Number	CD	Qty	Description	Mfr Code	Mfr Part Number
A9R81	0698-6360	6		RESISTOR 10K .1% .125W F TC=0+-25	28480	0698-6360
A9R83	0698-3453	2		RESISTOR 196K 1% .125W F TC=0+-100	24546	C4-1/8-T0-1963-F
A9R84	0698-3160	8		RESISTOR 31.6K 1% .125W F TC=0+-100	24546	C4-1/8-T0-3162-F
A9R86	0698-3157	3		RESISTOR 19.6K 1% .125W F TC=0+-100	24546	C4-1/8-T0-1962-F
A9R87	0757-0465	6		RESISTOR 100K 1% .125W F TC=0+-100	24546	C4-1/8-T0-1003-F
A9R88	0698-6360	6		RESISTOR 10K .1% .125W F TC=0+-25	28480	0698-6360
A9R89	0698-6360	6		RESISTOR 10K .1% .125W F TC=0+-25	28480	0698-6360
A9R90	0699-0273	0		RESISTOR 2.15K .1% .125W F TC=0+-25	28480	0699-0273
A9R100	1810-0279	5	2	NETWORK-RES 10-SIP4.7K OHM X 9	91121	210A472
A9R104	1810-0280	8	1	NETWORK-RES 10-SIP10.0K OHM X 9	01121	210A103
A9R303	1810-0279	5		NETWORK-RES 10-SIP4.7K OHM X 9	91121	210A472
A9R306	2100-3154	7	1	RESISTOR-TRMR 1K 10% C SIDE-ADJ 17-TRN	02111	43P102
A9TP1	0360-1682	3	4	TERMINAL-STUD SGL-TUR PRESS-MTG	28480	0360-1682
A9TP2	0360-1682	0		TERMINAL-STUD SGL-TUR PRESS-MTG	28480	0360-1682
A9TP3	0360-1682	0		TERMINAL-STUD SGL-TUR PRESS-MTG	28480	0360-1682
A9TP4	0360-1682	0		TERMINAL-STUD SGL-TUR PRESS-MTG	28480	0360-1682
A9TP5	1251-5380	3	2	CONNECTOR 2-PIN M POST TYPE	28480	1251-5380
A9TP6	1251-5925	2	2	CONNECTOR 12-PIN M POST TYPE	28480	1251-5925
A9TP7	1251-5925	2		CONNECTOR 12-PIN M POST TYPE	28480	1251-5925
A9TP8	1251-5380	3		CONNECTOR 2-PIN M POST TYPE	28480	1251-5380
A9U102	1820-2624	9	1	IC-MPU; CLK FREQ=2MHZ, ENHANCED 6800	28480	1820-2624
A9U103	1826-0915	9	1	IC OP AMP LOW-BIAS-H-IMPD 8-DIP-C PKG	01295	TL071ACJG (PER HP DWG)
A9U104	1826-0070	9	2	IC COMPARATOR PRCN TO-99 PKG	27014	LM211H
A9U105	1826-0521	3	4	IC OP AMP LOW-BIAS-H-IMPD DUAL 8-DIP-P	01295	TL072CP
A9U203	1820-1199	1	1	IC INV TTL LS HEX 1-INP	01295	SN74LS04N
A9U204	1826-0707	7	3	IC CONV 8-B-D/A 16-DIP-P PKG	24355	AD7523JN
A9U302	1820-2405	4	3	IC FF TTL LS D-TYPE POS-EDGE-TRIG COM	34335	AM25LS2520DC
A9U303	1820-1858	9	2	IC FF TTL LS D-TYPE OCTL	01295	SN74LS377N
A9U304	1820-1858	9		IC FF TTL LS D-TYPE OCTL	01295	SN74LS377N
A9U305	1826-0098	9		IC COMPARATOR PRCN TO-99 PKG	27014	LM211H
A9U400	04945-10001	8	1	TRTS PROM	28480	04945-10001
A9U402	1820-2405	4		IC FF TTL LS D-TYPE POS-EDGE-TRIG COM	34335	AM25LS2520DC
A9U403	1826-0707	7		IC CONV 8-B-D/A 16-DIP-P PKG	24355	AD7523JN
A9U404	1826-0521	3		IC OP AMP LOW-BIAS-H-IMPD DUAL 8-DIP-P	01295	TL072CP
A9U405	1826-0521	3		IC OP AMP LOW-BIAS-H-IMPD DUAL 8-DIP-P	01295	TL072CP
A9U406	1820-1470	1	1	IC MUXR/DATA-SEL TTL LS 2-TO-1-LINE QUAD	01295	SN74LS157N
A9U502	1820-2405	4		IC FF TTL LS D-TYPE POS-EDGE-TRIG COM	34335	AM25LS2520DC
A9U503	1826-0707	7		IC CONV 8-B-D/A 16-DIP-P PKG	24355	AD7523JN
A9U504	1826-0138	8	1	IC COMPARATOR GP QUAD 14-DIP-P PKG	01295	LM339N
A9U505	1820-1112	8	4	IC FF TTL LS D-TYPE POS-EDGE-TRIG	01295	SN74LS74AN
A9U506	1820-1112	8		IC FF TTL LS D-TYPE POS-EDGE-TRIG	01295	SN74LS74AN
A9U600	1818-1751	6	1	IC NMOS 1024 (1K) STAT RAM 250-NS 3-S	04713	MCM6810P
A9U602	1820-2024	3	1	IC DRVR TTL LS LINE DRVR OCTL	01295	SN74LS244N
A9U604	1820-1568	8	1	IC BFR TTL LS BUS QUAD	01295	SN74LS125AN
A9U605	1826-0180	0	2	IC TIMER TTL MONO/ASTBL	01295	NE555P
A9U606	1826-0521	3		IC OP AMP LOW-BIAS-H-IMPD DUAL 8-DIP-P	01295	TL072CP
A9U702	1820-1449	5	1	IC LCH TTL LS QUAD	01295	SN74LS279N
A9U703	1826-0522	4	1	IC OP AMP LOW-BIAS-H-IMPD QUAD 14-DIP-P	01295	TL074CN
A9U704	1820-1211	8	1	IC GATE TTL LS EXCL-OR QUAD 2-INP	01295	SN74LS86N
A9U705	1820-1781	7	1	IC SWITCH ANLG DUAL TO-100 PKG	34371	HI2-200-5
A9U800	1820-2053	8	1	IC DCDR TTL LS BCD 4-TO-16-LINE	18324	74LS154N
A9U802	1820-1216	3	2	IC DCDR TTL LS 3-TO-8-LINE 3-INP	01295	SN74LS138N
A9U803	1826-0180	0		IC TIMER TTL MONO/ASTBL	01295	NE555P
A9U804	1820-1197	9	1	IC GATE TTL LS NAND QUAD 2-INP	01295	SN74LS00N
A9U805	1820-1423	4	1	IC MV TTL LS MONOSTBL RETRIG DUAL	01295	SN74LS123N
A9U900	1820-1216	3		IC DCDR TTL LS 3-TO-8-LINE 3-INP	01295	SN74LS138N
A9U902	1820-1419	8	1	IC COMPTR TTL LS MAGID 4-BIT	01295	SN74LS85N
A9U903	1820-1208	3	1	IC GATE TTL LS OR QUAD 2-INP	01295	SN74LS32N
A9U904	1820-1112	8		IC FF TTL LS D-TYPE POS-EDGE-TRIG	01295	SN74LS74AN
A9U905	1820-1112	8		IC FF TTL LS D-TYPE POS-EDGE-TRIG	01295	SN74LS74AN
A9XU102	1200-0654	7	1	SOCKET-IC 40-CONT DIP DIP-SLDR	28480	1200-0654
A9XU400	1200-0541	1	2	SOCKET-IC 24-CONT DIP DIP-SLDR	28480	1200-0541
A9XU500	1200-0541	1		SOCKET-IC 24-CONT DIP DIP-SLDR	28480	1200-0541
A9Y1	0410-1486	9	1	CRYSTAL 8.00MHZ	28480	0410-1486
	1480-0116	8	2	PIN-GRV .062-IN-DIA .25-IN-LG STL	28480	1480-0116
	4040-0747	2	2	EXTR-PC BD GRA POLYC .062-BD-THKNS	28480	4040-0747
	5080-8546	0	1	A9-ID LABEL	28480	5080-8546

See introduction to this section for ordering information
*Indicates factory selected value

Table 6-2. 4945A Replaceable Parts (Cont'd)

Reference Designation	HP Part Number	CD	Qty	Description	Mfr Code	Mfr Part Number
A10	04945-60010	4	1	RCVR PROCESSOR	28480	04945-60010
A10C1	0160-5298	8	26	CAPACITOR-FXD .01UF +-20% 100VDC CER	28480	0160-5298
A10C2	0160-5298	8		CAPACITOR-FXD .01UF +-20% 100VDC CER	28480	0160-5298
A10C3	0160-5298	8		CAPACITOR-FXD .01UF +-20% 100VDC CER	28480	0160-5298
A10C4	0160-5298	8		CAPACITOR-FXD .01UF +-20% 100VDC CER	28480	0160-5298
A10C5	0160-5298	8		CAPACITOR-FXD .01UF +-20% 100VDC CER	28480	0160-5298
A10C6	0160-5298	8		CAPACITOR-FXD .01UF +-20% 100VDC CER	28480	0160-5298
A10C7	0160-5298	8		CAPACITOR-FXD .01UF +-20% 100VDC CER	28480	0160-5298
A10C8	0160-5298	8		CAPACITOR-FXD .01UF +-20% 100VDC CER	28480	0160-5298
A10C9	0160-5298	8		CAPACITOR-FXD .01UF +-20% 100VDC CER	28480	0160-5298
A10C10	0160-4803	9	2	CAPACITOR-FXD 68PF +-5% 100VDC CER 0+-30	28480	0160-4803
A10C11	0160-4807	3	2	CAPACITOR-FXD 33PF +-5% 100VDC CER 0+-30	28480	0160-4807
A10C12	0160-5298	8		CAPACITOR-FXD .01UF +-20% 100VDC CER	28480	0160-5298
A10C13	0160-5298	8		CAPACITOR-FXD .01UF +-20% 100VDC CER	28480	0160-5298
A10C14	0160-5298	8		CAPACITOR-FXD .01UF +-20% 100VDC CER	28480	0160-5298
A10C15	0160-5298	8		CAPACITOR-FXD .01UF +-20% 100VDC CER	28480	0160-5298
A10C16	0160-5298	8		CAPACITOR-FXD .01UF +-20% 100VDC CER	28480	0160-5298
A10C17	0160-5298	8		CAPACITOR-FXD .01UF +-20% 100VDC CER	28480	0160-5298
A10C18	0160-5298	8		CAPACITOR-FXD .01UF +-20% 100VDC CER	28480	0160-5298
A10C19	0160-5298	8		CAPACITOR-FXD .01UF +-20% 100VDC CER	28480	0160-5298
A10C20	0160-4803	9		CAPACITOR-FXD 68PF +-5% 100VDC CER 0+-30	28480	0160-4803
A10C21	0160-4807	3		CAPACITOR-FXD 33PF +-5% 100VDC CER 0+-30	28480	0160-4807
A10C22	0160-5298	8		CAPACITOR-FXD .01UF +-20% 100VDC CER	28480	0160-5298
A10C23	0160-5298	8		CAPACITOR-FXD .01UF +-20% 100VDC CER	28480	0160-5298
A10C24	0160-5298	8		CAPACITOR-FXD .01UF +-20% 100VDC CER	28480	0160-5298
A10C25	0160-5298	8		CAPACITOR-FXD .01UF +-20% 100VDC CER	28480	0160-5298
A10C26	0160-5298	8		CAPACITOR-FXD .01UF +-20% 100VDC CER	28480	0160-5298
A10C27	0160-5298	8		CAPACITOR-FXD .01UF +-20% 100VDC CER	28480	0160-5298
A10C28	0160-5298	8		CAPACITOR-FXD .01UF +-20% 100VDC CER	28480	0160-5298
A10C29	0160-5298	8		CAPACITOR-FXD .01UF +-20% 100VDC CER	28480	0160-5298
A10C30	0160-5298	8		CAPACITOR-FXD .01UF +-20% 100VDC CER	28480	0160-5298
A10C31	0180-2207	5	1	CAPACITOR-FXD 100UF+-10% 10VDC TA	56289	150D107X9010R2
A10CR1	1990-0810	0	1	LED-LAMP LUM-INT=2.5MCD IF=20MA-MAX	28480	1990-0810
A10CR2	1902-0943	5	1	DIODE-ZNR 2.4V 5% DO-35 PD=.4W TC=-.037%	28480	1902-0943
A10CR3	1901-0050	3	3	DIODE-SWITCHING 80V 200MA 2NS DO-35	28480	1901-0050
A10CR4	1901-0050	3		DIODE-SWITCHING 80V 200MA 2NS DO-35	28480	1901-0050
A10CR5	1901-0050	3		DIODE-SWITCHING 80V 200MA 2NS DO-35	28480	1901-0050
A10P1	1251-7506	9	1	CONN-POST TYPE .100-PIN-SPCG 120-CONT	28480	1251-7506
A10Q1	1854-0810	2	1	TRANSISTOR NPN SI PD=625MW FT=200MHZ	28480	1854-0810
A10R1	0698-3440	7	1	RESISTOR 196 1% .125W F TC=0+-100	24546	C4-1/8-T0-196R-F
A10R2	0757-0465	6	1	RESISTOR 100K 1% .125W F TC=0+-100	24546	C4-1/8-T0-1003-F
A10R3	0757-0280	3	6	RESISTOR 1K 1% .125W F TC=0+-100	24546	C4-1/8-T0-1001-F
A10R4	0757-0279	0	1	RESISTOR 3.16K 1% .125W F TC=0+-100	24546	C4-1/8-T0-3161-F
A10R5	0757-0280	3		RESISTOR 1K 1% .125W F TC=0+-100	24546	C4-1/8-T0-1001-F
A10R6	0757-0442	9	2	RESISTOR 10K 1% .125W F TC=0+-100	24546	C4-1/8-T0-1002-F
A10R7	0698-3155	1	2	RESISTOR 4.64K 1% .125W F TC=0+-100	24546	C4-1/8-T0-4641-F
A10R8	0757-0280	3		RESISTOR 1K 1% .125W F TC=0+-100	24546	C4-1/8-T0-1001-F
A10R9	0757-0402	1	2	RESISTOR 110 1% .125W F TC=0+-100	24546	C4-1/8-T0-111-F
A10R10	0757-0280	3		RESISTOR 1K 1% .125W F TC=0+-100	24546	C4-1/8-T0-1001-F
A10R11	0757-0403	2	2	RESISTOR 121 1% .125W F TC=0+-100	24546	C4-1/8-T0-121R-F
A10R12	0757-0403	2		RESISTOR 121 1% .125W F TC=0+-100	24546	C4-1/8-T0-121R-F
A10R13	0757-0402	1		RESISTOR 110 1% .125W F TC=0+-100	24546	C4-1/8-T0-111-F
A10R14	0757-0280	3		RESISTOR 1K 1% .125W F TC=0+-100	24546	C4-1/8-T0-1001-F
A10R15	0757-0442	9		RESISTOR 10K 1% .125W F TC=0+-100	24546	C4-1/8-T0-1002-F
A10R16	0698-3155	1		RESISTOR 4.64K 1% .125W F TC=0+-100	24546	C4-1/8-T0-4641-F
A10R17	0757-0280	3		RESISTOR 1K 1% .125W F TC=0+-100	24546	C4-1/8-T0-1001-F
A10R107	1810-0279	5	2	NETWORK-RES 10-SIP4.7K OHM X 9	01121	210A472
A10R200	1810-0280	8	1	NETWORK-RES 10-SIP10.0K OHM X 9	01121	210A103
A10R500	1810-0365	0	1	NETWORK-RES 6-SIP2.2K OHM X 5	01121	206A222
A10R603	1810-0279	5		NETWORK-RES 10-SIP4.7K OHM X 9	01121	210A472
A10S100	3101-2135	5	1	SWITCH-2KR DIP-RKR-ASSY DPDT .05A 30VDC	28480	3101-2135
A10TP1	0360-1682	0	2	TERMINAL-STUD SGL-TUR PRESS-MTG	28480	0360-1682
A10TP2	0360-1682	0		TERMINAL-STUD SGL-TUR PRESS-MTG	28480	0360-1682
A10TP3-A10TP5	1251-4670	2	3	CONNECTOR 3-PIN M POST TYPE	28480	1251-4670
A10TP6-A10TP13	1251-5618	0	8	CONNECTOR 8-PIN M POST TYPE	28480	1251-5618
A10TP14-A10TP19	1251-5038	8	6	CONNECTOR 6-PIN M POST TYPE	22526	65500-106

See introduction to this section for ordering information
*Indicates factory selected value

Table 6-2. 4945A Replaceable Parts (Cont'd)

Reference Designation	HP Part Number	C D	Qty	Description	Mfr Code	Mfr Part Number
A10U102	1820-1281	2	1	IC DCDR TTL LS 2-TO-4-LINE DUAL 2-INP	01295	SN74LS139N
A10U103	1820-1216	3	3	IC DCDR TTL LS 3-TO-8-LINE 3-INP	01295	SN74LS138N
A10U105	1820-2024	3	5	IC DRVR TTL LS LINE DRVR OCTL	01295	SN74LS244N
A10U107	1820-1858	9	1	IC FF TTL LS D-TYPE OCTL	01295	SN74LS377N
A10U200	1820-2075	4	4	IC MISC TTL LS	01295	SN74LS245N
A10U202	1820-1470	1	4	IC MUXR/DATA-SEL TTL LS 2-TO-1-LINE QUAD	01295	SN74LS157N
A10U203	1820-2024	3		IC DRVR TTL LS LINE DRVR OCTL	01295	SN74LS244N
A10U300	1820-2293	8	1	IC-MPU; CLK FREQ=2MHZ	28480	1820-2293
A10U303	1820-1216	3		IC DCDR TTL LS 3-TO-8-LINE 3-INP	01295	SN74LS138N
A10U304	1820-1216	3		IC DCDR TTL LS 3-TO-8-LINE 3-INP	01295	SN74LS138N
A10U305	04945-10021	2	1	RVCR PROM 23	28480	04945-10021
A10U306	04945-10007	4	1	RVCR PROM 45	28480	04945-10007
A10U307	04945-10006	3	1	RVCR PROM 67	28480	04945-10006
A10U308	04945-10005	2	1	RVCR PROM 89	28480	04945-10005
A10U400	1820-1804	5	1	IC BFR NMOS CLOCK DRVR	04713	MPQ6842
A10U402	1820-1470	1		IC MUXR/DATA-SEL TTL LS 2-TO-1-LINE QUAD	01295	SN74LS157N
A10U403	1820-2024	3		IC DRVR TTL LS LINE DRVR OCTL	01295	SN74LS244N
A10U405	1818-1738	9	3	IC CMOS 16384 (16K) STAT RAM 200-NS 3-S	S4013	HM6116LP-4
A10U407	04945-10004	1	1	RVCR PROM AB	28480	04945-10004
A10U500	1820-2024	3		IC DRVR TTL LS LINE DRVR OCTL	01295	SN74LS244N
A10U502	1820-1470	1		IC MUXR/DATA-SEL TTL LS 2-TO-1-LINE QUAD	01295	SN74LS157N
A10U503	1818-1738	9		IC CMOS 16384 (16K) STAT RAM 200-NS 3-S	S4013	HM6116LP-4
A10U505	1818-1738	9		IC CMOS 16384 (16K) STAT RAM 200-NS 3-S	S4013	HM6116LP-4
A10U507	04945-10003	0	1	RVCR PROM CD	28480	04945-10003
A10U600	1820-0683	6	1	IC INV TTL S HEX 1-INP	01295	SN74S04N
A10U602	1820-1470	1		IC MUXR/DATA-SEL TTL LS 2-TO-1-LINE QUAD	01295	SN74LS157N
A10U603	1820-2075	4		IC MISC TTL LS	01295	SN74LS245N
A10U605	1820-2024	3		IC DRVR TTL LS LINE DRVR OCTL	01295	SN74LS244N
A10U607	04945-10002	9	1	RVCR PROM EF	28480	04945-10002
A10U700	1820-0681	4	1	IC GATE TTL S NAND QUAD 2-INP	01295	SN74S00N
A10U702	1820-2311	1	1	IC COMPTR TTL LS MAGTD 8-BIT	34335	AM25LS2521PC
A10U703	1820-2075	4		IC MISC TTL LS	01295	SN74LS245N
A10U705	1820-2075	4		IC MISC TTL LS	01295	SN74LS245N
A10XU300	1200-0654	7	1	SOCKET-IC 40-CONT DIP DIP-SLDR	28480	1200-0654
A10XU305	1200-0567	1	7	SOCKET-IC 28-CONT DIP DIP-SLDR	28480	1200-0567
A10XU306	1200-0567	1		SOCKET-IC 28-CONT DIP DIP-SLDR	28480	1200-0567
A10XU307	1200-0567	1		SOCKET-IC 28-CONT DIP DIP-SLDR	28480	1200-0567
A10XU308	1200-0567	1		SOCKET-IC 28-CONT DIP DIP-SLDR	28480	1200-0567
A10XU407	1200-0567	1		SOCKET-IC 28-CONT DIP DIP-SLDR	28480	1200-0567
A10XU507	1200-0567	1		SOCKET-IC 28-CONT DIP DIP-SLDR	28480	1200-0567
A10XU607	1200-0567	1		SOCKET-IC 28-CONT DIP DIP-SLDR	28480	1200-0567
	1480-0116	8	2	PIN-GRV .062-IN-DIA .25-IN-LG STL	28480	1480-0116
	4040-0745	0	2	SEAL LIGHT	28480	4040-0745
	5080-8547	1	1	A10 ID LABEL	28480	5080-8547

See introduction to this section for ordering information
*Indicates factory selected value

Table 6-2. 4945A Replaceable Parts (Cont'd)

Reference Designation	HP Part Number	C D	Qty	Description	Mfr Code	Mfr Part Number
A11	04945-60011	6	1	SYSTEM PROCESSOR	28480	04945-60011
A11C1	0160-5298	8	34	CAPACITOR-FXD .01UF +-20% 100VDC CER	28480	0160-5298
A11C2	0160-5298	8		CAPACITOR-FXD .01UF +-20% 100VDC CER	28480	0160-5298
A11C3	0160-5298	8		CAPACITOR-FXD .01UF +-20% 100VDC CER	28480	0160-5298
A11C4	0160-5298	8		CAPACITOR-FXD .01UF +-20% 100VDC CER	28480	0160-5298
A11C5	0160-5298	8		CAPACITOR-FXD .01UF +-20% 100VDC CER	28480	0160-5298
A11C6	0160-5298	8		CAPACITOR-FXD .01UF +-20% 100VDC CER	28480	0160-5298
A11C7	0160-5298	8		CAPACITOR-FXD .01UF +-20% 100VDC CER	28480	0160-5298
A11C8	0160-5298	8		CAPACITOR-FXD .01UF +-20% 100VDC CER	28480	0160-5298
A11C9	0160-5298	8		CAPACITOR-FXD .01UF +-20% 100VDC CER	28480	0160-5298
A11C10	0160-5298	8		CAPACITOR-FXD .01UF +-20% 100VDC CER	28480	0160-5298
A11C11	0160-5298	8		CAPACITOR-FXD .01UF +-20% 100VDC CER	28480	0160-5298
A11C12	0160-5298	8		CAPACITOR-FXD .01UF +-20% 100VDC CER	28480	0160-5298
A11C13	0160-5298	8		CAPACITOR-FXD .01UF +-20% 100VDC CER	28480	0160-5298
A11C14	0160-5298	8		CAPACITOR-FXD .01UF +-20% 100VDC CER	28480	0160-5298
A11C15	0160-5298	8		CAPACITOR-FXD .01UF +-20% 100VDC CER	28480	0160-5298
A11C16	0160-5298	8		CAPACITOR-FXD .01UF +-20% 100VDC CER	28480	0160-5298
A11C17	0160-5298	8		CAPACITOR-FXD .01UF +-20% 100VDC CER	28480	0160-5298
A11C19	0160-0127	2	2	CAPACITOR-FXD 1UF +-20% 25VDC CER	28480	0160-0127
A11C20	0160-0127	2		CAPACITOR-FXD 1UF +-20% 25VDC CER	28480	0160-0127
A11C21	0160-5298	8		CAPACITOR-FXD .01UF +-20% 100VDC CER	28480	0160-5298
A11C22	0160-5298	8		CAPACITOR-FXD .01UF +-20% 100VDC CER	28480	0160-5298
A11C23	0160-5298	8		CAPACITOR-FXD .01UF +-20% 100VDC CER	28480	0160-5298
A11C24	0160-5298	8		CAPACITOR-FXD .01UF +-20% 100VDC CER	28480	0160-5298
A11C25	0160-5332	1	2	CAPACITOR-FXD .1UF +-20% 50VDC CER	28480	0160-5332
A11C26	0160-5298	8		CAPACITOR-FXD .01UF +-20% 100VDC CER	28480	0160-5298
A11C27	0160-5298	8		CAPACITOR-FXD .01UF +-20% 100VDC CER	28480	0160-5298
A11C28	0160-5298	8		CAPACITOR-FXD .01UF +-20% 100VDC CER	28480	0160-5298
A11C29	0160-5298	8		CAPACITOR-FXD .01UF +-20% 100VDC CER	28480	0160-5298
A11C30	0160-5332	1		CAPACITOR-FXD .1UF +-20% 50VDC CER	28480	0160-5332
A11C31	0160-5298	8		CAPACITOR-FXD .01UF +-20% 100VDC CER	28480	0160-5298
A11C32	0160-4810	8	2	CAPACITOR-FXD 330PF +-5% 100VDC CER	28480	0160-4810
A11C33	0160-5298	8		CAPACITOR-FXD .01UF +-20% 100VDC CER	28480	0160-5298
A11C34	0160-4810	8		CAPACITOR-FXD 330PF +-5% 100VDC CER	28480	0160-4810
A11C35	0160-4803	9	2	CAPACITOR-FXD 68PF +-5% 100VDC CER 0+-30	28480	0160-4803
A11C36	0160-4807	3	2	CAPACITOR-FXD 33PF +-5% 100VDC CER 0+-30	28480	0160-4807
A11C37	0160-4803	9		CAPACITOR-FXD 68PF +-5% 100VDC CER 0+-30	28480	0160-4803
A11C38	0160-4807	3		CAPACITOR-FXD 33PF +-5% 100VDC CER 0+-30	28480	0160-4807
A11C39	0160-5298	8		CAPACITOR-FXD .01UF +-20% 100VDC CER	28480	0160-5298
A11C40	0160-5298	8		CAPACITOR-FXD .01UF +-20% 100VDC CER	28480	0160-5298
A11C41	0160-5298	8		CAPACITOR-FXD .01UF +-20% 100VDC CER	28480	0160-5298
A11C42	0160-5298	8		CAPACITOR-FXD .01UF +-20% 100VDC CER	28480	0160-5298
A11C43	0160-5298	8		CAPACITOR-FXD .01UF +-20% 100VDC CER	28480	0160-5298
A11C44	0160-5298	8		CAPACITOR-FXD .01UF +-20% 100VDC CER	28480	0160-5298
A11C45	0180-0374	3	1	CAPACITOR-FXD 10UF+-10% 20VDC TA	56289	150D106X9020B2
A11C46	0160-5298	8		CAPACITOR-FXD .01UF +-20% 100VDC CER	28480	0160-5298
A11CR1	1901-0033	2	3	DIODE-GEN PRP 180V 200MA DO-7	28480	1901-0033
A11CR3	1901-0033	2		DIODE-GEN PRP 180V 200MA DO-7	28480	1901-0033
A11CR4	1901-0033	2		DIODE-GEN PRP 180V 200MA DO-7	28480	1901-0033
A11J1	1251-8171	6	2	CONN-POST TYPE .100-PIN-SPCG 3-CONT	28480	1251-8171
A11JU1	1258-0141	8	1	JUMPER-REM	28480	1258-0141
A11JU602	1251-4398	1	1	CONNECTOR SHUNT-4 POSITION	28480	1251-4398
A11P1	1251-7506	9	1	CONN-POST TYPE .100-PIN-SPCG 120-CONT	28480	1251-7506
A11R2	0757-0401	0	2	RESISTOR 100 1% .125W F TC=0+-100	24546	C4-1/8-T0-101-F
A11R4	0757-0462	3	1	RESISTOR 75K 1% .125W F TC=0+-100	24546	C4-1/8-T0-7502-F
A11R5	0757-0465	6	1	RESISTOR 100K 1% .125W F TC=0+-100	24546	C4-1/8-T0-1003-F
A11R6	0757-0442	9	2	RESISTOR 10K 1% .125W F TC=0+-100	24546	C4-1/8-T0-1002-F
A11R7	0698-0082	7	2	RESISTOR 464 1% .125W F TC=0+-100	24546	C4-1/8-T0-4640-F
A11R8	0698-3155	1	3	RESISTOR 4.64K 1% .125W F TC=0+-100	24546	C4-1/8-T0-4641-F
A11R9	0757-0280	3	2	RESISTOR 1K 1% .125W F TC=0+-100	24546	C4-1/8-T0-1001-F
A11R10	0757-0442	9		RESISTOR 10K 1% .125W F TC=0+-100	24546	C4-1/8-T0-1002-F
A11R11	0757-0402	1	2	RESISTOR 110 1% .125W F TC=0+-100	24546	C4-1/8-T0-111-F
A11R12	0757-0403	2	2	RESISTOR 121 1% .125W F TC=0+-100	24546	C4-1/8-T0-121R-F
A11R13	0757-0402	1		RESISTOR 110 1% .125W F TC=0+-100	24546	C4-1/8-T0-111-F
A11R14	0757-0403	2		RESISTOR 121 1% .125W F TC=0+-100	24546	C4-1/8-T0-121R-F
A11R15	0698-3155	1		RESISTOR 4.64K 1% .125W F TC=0+-100	24546	C4-1/8-T0-4641-F
A11R16	0757-0280	3		RESISTOR 1K 1% .125W F TC=0+-100	24546	C4-1/8-T0-1001-F
A11R17	0698-0082	7		RESISTOR 464 1% .125W F TC=0+-100	24546	C4-1/8-T0-4640-F
A11R18	0698-3155	1		RESISTOR 4.64K 1% .125W F TC=0+-100	24546	C4-1/8-T0-4641-F
A11R19	0698-3157	3	1	RESISTOR 19.6K 1% .125W F TC=0+-100	24546	C4-1/8-T0-1962-F
A11R20	0698-3152	8	2	RESISTOR 3.48K 1% .125W F TC=0+-100	24546	C4-1/8-T0-3481-F
A11R21	0698-3152	8		RESISTOR 3.48K 1% .125W F TC=0+-100	24546	C4-1/8-T0-3481-F
A11R22	0757-0401	0		RESISTOR 100 1% .125W F TC=0+-100	24546	C4-1/8-T0-101-F

See introduction to this section for ordering information
*Indicates factory selected value

Table 6-2. 4945A Replaceable Parts (Cont'd)

Reference Designation	HP Part Number	C D	Qty	Description	Mfr Code	Mfr Part Number
A11R206	1810-0367	2	1	NETWORK-RES 6-SIP4.7K OHM X 5	01121	206A472
A11R703	1810-0280	8	1	NETWORK-RES 10-SIP10.0K OHM X 9	01121	210A103
A11R706	1810-0368	3	1	NETWORK-RES 6-SIP10.0K OHM X 5	01121	206A103
A11R806	1810-0338	7	1	NETWORK-RES 16-DIP100.0 OHM X 8	11236	761-3-R100
A11S106	3101-2601	0	1	SWITCH-PB SPDT MOM .02A PED-BIN	28480	3101-2601
A11S406	3101-2063	8	1	SWITCH-RKR DIP-RKR-ASSY 4-1A .05A 30VDC	28480	3101-2063
A11TP1	1251-5618	0	1	CONNECTOR 8-PIN M POST TYPE	28480	1251-5618
A11TP3	0360-1682	0	4	TERMINAL-STUD SGL-TUR PRESS-MTG	28480	0360-1682
A11TP4	0360-1682	0		TERMINAL-STUD SGL-TUR PRESS-MTG	28480	0360-1682
A11TP5	0360-1682	0		TERMINAL-STUD SGL-TUR PRESS-MTG	28480	0360-1682
A11TP6	0360-1682	0		TERMINAL-STUD SGL-TUR PRESS-MTG	28480	0360-1682
A11TP606	1251-8171	6		CONN-POST TYPE .100-PIN-SPCG 3-CONT	28480	1251-8171
A11U100	1820-1282	3	6	IC FF TTL LS J-K BAR POS-EDGE-TRIG	01295	SN74LS109AN
A11U101	1820-0683	6	3	IC INV TTL S HEX 1-INP	01295	SN74S04N
A11U102	1820-1282	3		IC FF TTL LS J-K BAR POS-EDGE-TRIG	01295	SN74LS109AN
A11U103	1820-1282	3		IC FF TTL LS J-K BAR POS-EDGE-TRIG	01295	SN74LS109AN
A11U105	1820-0683	6		IC INV TTL S HEX 1-INP	01295	SN74S04N
A11U200	1820-1207	2	1	IC GATE TTL LS NAND 8-INP	01295	SN74LS30N
A11U201	1820-1240	3	2	IC DCDR TTL S 3-TO-8-LINE 3-INP	01295	SN74S138N
A11U202	1820-1282	3		IC FF TTL LS J-K BAR POS-EDGE-TRIG	01295	SN74LS109AN
A11U203	1820-1282	3		IC FF TTL LS J-K BAR POS-EDGE-TRIG	01295	SN74LS109AN
A11U204	1818-1738	9	2	IC CMOS 16384 (16K) STAT RAM 200-NS 3-S	34013	HM6116LP-4
A11U205	1820-0697	2	1	IC DRVR TTL S NAND LINE DUAL 4-INP	01295	SN74S140N
A11U300	1820-1432	5	2	IC CNTR TTL LS BIN SYNCHRO POS-EDGE-TRIG	01295	SN74LS163AN
A11U301	1820-0683	6		IC INV TTL S HEX 1-INP	01295	SN74S04N
A11U302	1820-1282	3		IC FF TTL LS J-K BAR POS-EDGE-TRIG	01295	SN74LS109AN
A11U303	1820-1240	3		IC DCDR TTL S 3-TO-8-LINE 3-INP	01295	SN74S138N
A11U400	1820-1432	5		IC CNTR TTL LS BIN SYNCHRO POS-EDGE-TRIG	01295	SN74LS163AN
A11U401	1820-1203	8	1	IC GATE TTL LS AND TPL 3-INP	01295	SN74LS11N
A11U402	1820-1208	3	1	IC GATE TTL LS OR QUAD 2-INP	01295	SN74LS32N
A11U403	1820-1453	0	1	IC CNTR TTL S BIN SYNCHRO POS-EDGE-TRIG	01295	SN74S163N
A11U404	1818-1738	9		IC CMOS 16384 (16K) STAT RAM 200-NS 3-S	34013	HM6116LP-4
A11U406	1820-1356	2	1	IC MV CMOS MONOSTBL RETRIG/RESET DUAL	04713	MC14528BCP
A11U500	1820-1281	2	3	IC DCDR TTL LS 2-TO-4-LINE DUAL 2-INP	01295	SN74LS139N
A11U501	1820-1201	6	1	IC GATE TTL LS AND QUAD 2-INP	01295	SN74LS08N
A11U502	1820-1281	2		IC DCDR TTL LS 2-TO-4-LINE DUAL 2-INP	01295	SN74LS139N
A11U503	1820-1977	3	1	IC OSC ECL	04713	MC12061P
A11U600	1820-1804	5	1	IC BFR NMOS CLOCK DRVR	04713	MPQ6842
A11U601	1820-1281	2		IC DCDR TTL LS 2-TO-4-LINE DUAL 2-INP	01295	SN74LS139N
A11U602	1820-1216	3	2	IC DCDR TTL LS 3-TO-8-LINE 3-INP	01295	SN74LS138N
A11U604	04945-10008	5	1	SYS PROM	28480	04945-10008
A11U606	1820-2307	5	1	IC-PROGRMBL TIMER MOD, 6MHZ, 3 ASYCH	28480	1820-2307
A11U607	1820-1997	7	1	IC FF TTL LS D-TYPE POS-EDGE-TRIG PRL-IN	01295	SN74LS374N
A11U701	1820-2293	8	1	IC-MPU; CLK FREQ=2MHZ	28480	1820-2293
A11U703	1820-2001	2	1	IC NMOS	04713	MC68A21P
A11U706	1820-2024	3	4	IC DRVR TTL LS LINE DRVR OCTL	01295	SN74LS244N
A11U800	1820-1216	3		IC DCDR TTL LS 3-TO-8-LINE 3-INP	01295	SN74LS138N
A11U801	1820-2024	3		IC DRVR TTL LS LINE DRVR OCTL	01295	SN74LS244N
A11U802	1820-2024	3		IC DRVR TTL LS LINE DRVR OCTL	01295	SN74LS244N
A11U803	1820-2075	4	1	IC MISC TTL LS	01295	SN74LS245N
A11U804	1820-2024	3		IC DRVR TTL LS LINE DRVR OCTL	01295	SN74LS244N
A11XU602	1200-0796	8	1	SOCKET-IC 8-CONT DIP DIP-SLDR	28480	1200-0796
A11XU604	1200-0541	1	1	SOCKET-IC 24-CONT DIP DIP-SLDR	28480	1200-0541
A11XU605	1200-0567	1	1	SOCKET-IC 28-CONT DIP DIP-SLDR	28480	1200-0567
A11XU701	1200-0654	7	2	SOCKET-IC 40-CONT DIP DIP-SLDR	28480	1200-0654
A11XU703	1200-0654	7		SOCKET-IC 40-CONT DIP DIP-SLDR	28480	1200-0654
A11Y1	0410-1034	3	1	CRYSTAL-QUARTZ 16.000 MHZ HC-18/U-HLDR	28480	0410-1034
	1400-0116	8	1	PIN-CRV .062-IN-DIA .25-IN-LG STL	28480	1400-0116
	4040-0747	2	2	EXTR-PC BD GRA POLYC .062-BD-THKNS	28480	4040-0747
	5080-8548	2	1	A11 ID LABEL	28480	5080-8548

See introduction to this section for ordering information
*Indicates factory selected value

Table 6-2. 4945A Replaceable Parts (Cont'd)

Reference Designation	HP Part Number	C D	Qty	Description	Mfr Code	Mfr Part Number
A12	04945-60012	6	1	SYSTEM MEMORY	28480	04945-60012
A12B1	1420-0311	9	1	BATTERY 3V .2A-HR LI MANGANESE DIOXIDE	28480	1420-0311
A12C1	0160-5298	8	30	CAPACITOR-FXD .01UF +-20% 100VDC CER	28480	0160-5298
A12C2	0160-5298	8		CAPACITOR-FXD .01UF +-20% 100VDC CER	28480	0160-5298
A12C3	0160-5298	8		CAPACITOR-FXD .01UF +-20% 100VDC CER	28480	0160-5298
A12C4	0160-5298	8		CAPACITOR-FXD .01UF +-20% 100VDC CER	28480	0160-5298
A12C5	0160-5298	8		CAPACITOR-FXD .01UF +-20% 100VDC CER	28480	0160-5298
A12C6	0160-5298	8		CAPACITOR-FXD .01UF +-20% 100VDC CER	28480	0160-5298
A12C7	0160-5298	8		CAPACITOR-FXD .01UF +-20% 100VDC CER	28480	0160-5298
A12C8	0160-5298	8		CAPACITOR-FXD .01UF +-20% 100VDC CER	28480	0160-5298
A12C9	0160-5298	8		CAPACITOR-FXD .01UF +-20% 100VDC CER	28480	0160-5298
A12C10	0160-5298	8		CAPACITOR-FXD .01UF +-20% 100VDC CER	28480	0160-5298
A12C11	0160-5298	8		CAPACITOR-FXD .01UF +-20% 100VDC CER	28480	0160-5298
A12C12	0160-5298	8		CAPACITOR-FXD .01UF +-20% 100VDC CER	28480	0160-5298
A12C13	0160-5298	8		CAPACITOR-FXD .01UF +-20% 100VDC CER	28480	0160-5298
A12C14	0160-5298	8		CAPACITOR-FXD .01UF +-20% 100VDC CER	28480	0160-5298
A12C15	0160-5298	8		CAPACITOR-FXD .01UF +-20% 100VDC CER	28480	0160-5298
A12C16	0160-5298	8		CAPACITOR-FXD .01UF +-20% 100VDC CER	28480	0160-5298
A12C17	0160-2264	2	2	CAPACITOR-FXD 20PF +-5% 500VDC CER 0+-30	28480	0160-2264
A12C18	0160-2264	2		CAPACITOR-FXD 20PF +-5% 500VDC CER 0+-30	28480	0160-2264
A12C19	0160-5298	8		CAPACITOR-FXD .01UF +-20% 100VDC CER	28480	0160-5298
A12C20	0160-5298	8		CAPACITOR-FXD .01UF +-20% 100VDC CER	28480	0160-5298
A12C21	0160-5298	8		CAPACITOR-FXD .01UF +-20% 100VDC CER	28480	0160-5298
A12C22	0160-5298	8		CAPACITOR-FXD .01UF +-20% 100VDC CER	28480	0160-5298
A12C23	0160-5298	8		CAPACITOR-FXD .01UF +-20% 100VDC CER	28480	0160-5298
A12C24	0160-5298	8		CAPACITOR-FXD .01UF +-20% 100VDC CER	28480	0160-5298
A12C25	0160-5298	8		CAPACITOR-FXD .01UF +-20% 100VDC CER	28480	0160-5298
A12C26	0160-5298	8		CAPACITOR-FXD .01UF +-20% 100VDC CER	28480	0160-5298
A12C27	0160-5298	8		CAPACITOR-FXD .01UF +-20% 100VDC CER	28480	0160-5298
A12C28	0160-5298	8		CAPACITOR-FXD .01UF +-20% 100VDC CER	28480	0160-5298
A12C29	0160-5298	8		CAPACITOR-FXD .01UF +-20% 100VDC CER	28480	0160-5298
A12C30	0160-5298	8		CAPACITOR-FXD .01UF +-20% 100VDC CER	28480	0160-5298
A12C31	0160-5298	8		CAPACITOR-FXD .01UF +-20% 100VDC CER	28480	0160-5298
A12C32	0160-5298	8		CAPACITOR-FXD .01UF +-20% 100VDC CER	28480	0160-5298
A12C33	0180-0374	3	1	CAPACITOR-FXD 10UF+-10% 20VDC TA	56289	150D106X9020B2
A12CR1	1901-0033	2	1	DIODE-GEN PRP 180V 200MA DO-7	28480	1901-0033
A12CR2	1902-3059	0	1	DIODE-ZNR 3.83V 5% DO-35 PD=.4W	28480	1902-3059
A12CR3	1902-0943	5	1	DIODE-ZNR 2.4V 5% DO-35 PD=.4W TC=-.037%	28480	1902-0943
A12CR4	1901-0376	6	1	DIODE-GEN PRP 35V 50MA DO-35	28480	1901-0376
A12CR5	1901-1068	5	1	DIODE-SM SIG SCHOTTKY	28480	1901-1068
A12J308	1251-8171	6	1	CONN-POST TYPE .100-PIN-SPCG 3-CONT	28480	1251-8171
A12JU102	1251-4787	2	1	SHUNT-DIP 8-POSITION	28480	1251-4787
A12JU308	1258-0141	8	1	JUMPER-REM	28480	1258-0141
A12P1	1251-7506	9	1	CONN-POST TYPE .100-PIN-SPCG 120-CONT	28480	1251-7506
A12Q1	1853-0036	2	2	TRANSISTOR PNP SI PD=310MW FT=250MHZ	28480	1853-0036
A12Q2	1854-0215	1	1	TRANSISTOR NPN SI PD=350MW FT=300MHZ	04713	2N3904
A12Q3	1853-0036	2		TRANSISTOR PNP SI PD=310MW FT=250MHZ	28480	1853-0036
A12R1	0757-0442	9	5	RESISTOR 10K 1% .125W F TC=0+-100	24546	C4-1/8-T0-1002-F
A12R2	0757-0442	9		RESISTOR 10K 1% .125W F TC=0+-100	24546	C4-1/8-T0-1002-F
A12R3	0698-3441	8	1	RESISTOR 215 1% .125W F TC=0+-100	24546	C4-1/8-T0-215R-F
A12R4	0757-0442	9		RESISTOR 10K 1% .125W F TC=0+-100	24546	C4-1/8-T0-1002-F
A12R5	0698-3443	0	1	RESISTOR 287 1% .125W F TC=0+-100	24546	C4-1/8-T0-287R-F
A12R6	0698-3429	2	1	RESISTOR 19.6 1% .125W F TC=0+-100	03888	PME55-1/8-T0-19R6-F
A12R7	0698-3435	0	1	RESISTOR 38.3 1% .125W F TC=0+-100	24546	C4-1/8-T0-38R3-F
A12R8	0757-0401	0	1	RESISTOR 100 1% .125W F TC=0+-100	24546	C4-1/8-T0-101-F
A12R9	0698-3162	0	1	RESISTOR 46.4K 1% .125W F TC=0+-100	24546	C4-1/8-T0-4642-F
A12R10	0757-0280	3	1	RESISTOR 1K 1% .125W F TC=0+-100	24546	C4-1/8-T0-1001-F
A12R11	0757-0442	9		RESISTOR 10K 1% .125W F TC=0+-100	24546	C4-1/8-T0-1002-F
A12R12	0683-1065	7	1	RESISTOR 10M 5% .25W CC TC=-900/+1100	01121	CB1065
A12R13	0698-3453	2	1	RESISTOR 196K 1% .125W F TC=0+-100	24546	C4-1/8-T0-1963-F
A12R14	0698-0083	8	2	RESISTOR 1.96K 1% .125W F TC=0+-100	24546	C4-1/8-T0-1961-F
A12R15	0698-0083	8		RESISTOR 1.96K 1% .125W F TC=0+-100	24546	C4-1/8-T0-1961-F
A12R16	0757-0442	9		RESISTOR 10K 1% .125W F TC=0+-100	24546	C4-1/8-T0-1002-F
A12R17	0698-3430	5	1	RESISTOR 21.5 1% .125W F TC=0+-100	03888	PME55-1/8-T0-21R5-F
A12R18	0757-0395	1	1	RESISTOR 56.2 1% .125W F TC=0+-100	24546	C4-1/8-T0-56R2-F
A12R504	1810-0338	7	6	NETWORK-RES 16-DIP100.0 OHM X 8	11236	761-3-R100
A12R602	1810-0338	7		NETWORK-RES 16-DIP100.0 OHM X 8	11236	761-3-R100
A12R603	1810-0338	7		NETWORK-RES 16-DIP100.0 OHM X 8	11236	761-3-R100
A12R708	1810-0206	8	1	NETWORK-RES 8-SIP10.0K OHM X 7	01121	208A103

See introduction to this section for ordering information
*Indicates factory selected value

Table 6-2. 4945A Replaceable Parts (Cont'd)

Reference Designation	HP Part Number	C D	Qty	Description	Mfr Code	Mfr Part Number
A12TP1	1251-5618	0	2	CONNECTOR 8-PIN M POST TYPE	28480	1251-5618
A12TP2	0360-1682	0	2	TERMINAL-STUD SGL-TUR PRESS-MTG	28480	0360-1682
A12TP3	1251-5618	0		CONNECTOR 8-PIN M POST TYPE	28480	1251-5618
A12TP4	0360-1682	0		TERMINAL-STUD SGL-TUR PRESS-MTG	28480	0360-1682
A12U100	04945-10009	6	1	MEM PROM 6789	28480	04945-10009
A12U102	04945-10013	2	1	MEM PROM BANK 3	28480	04945-10013
A12U104	04945-10016	5	1	MEM PROM BANK 6	28480	04945-10016
A12U106	1818-T59045	4	2	IC PD444-6514	28480	1818-T59045
A12U107	1818-T59045	4		IC PD444-6514	28480	1818-T59045
A12U200	04945-10010	9	1	MEM PROM ABCD	28480	04945-10010
A12U202	04945-10014	3	1	MEM PROM BANK 4	28480	04945-10014
A12U204	04945-10017	6	1	MEM PROM BANK 7	28480	04945-10017
A12U206	1820-1997	7	3	IC FF TTL LS D-TYPE POS-EDGE-TRIG PRL-IN	01295	SN74LS374N
A12U208	1820-1417	6	1	IC GATE TTL LS NAND QUAD 2-INP	01295	SN74LS26N
A12U300	04945-10011	0	1	MEM PROM BANK 1	28480	04945-10011
A12U302	04945-10015	4	1	MEM PROM BANK 5	28480	04945-10015
A12U306	1820-1997	7		IC FF TTL LS D-TYPE POS-EDGE-TRIG PRL-IN	01295	SN74LS374N
A12U307	1820-1997	7		IC FF TTL LS D-TYPE POS-EDGE-TRIG PRL-IN	01295	SN74LS374N
A12U308	1820-2813	8	1	IC-MM58167	28480	1820-2813
A12U400	04945-10012	1	1	MEM PROM BANK 2	28480	04945-10012
A12U402	1818-1738	9	3	IC CMOS 16384 (16K) STAT RAM 200-NS 3-S	S4013	HM6116LP-4
A12U404	1818-1738	9		IC CMOS 16384 (16K) STAT RAM 200-NS 3-S	S4013	HM6116LP-4
A12U406	1820-1208	3	1	IC GATE TTL LS OR QUAD 2-INP	01295	SN74LS32N
A12U407	1820-1281	2	2	IC DCDR TTL LS 2-TO-4-LINE DUAL 2-INP	01295	SN74LS139N
A12U408	1820-1440	5	1	IC LCH TTL LS QUAD	01295	SN74LS279N
A12U500	1818-1738	9		IC CMOS 16384 (16K) STAT RAM 200-NS 3-S	S4013	HM6116LP-4
A12U502	1820-1419	8	2	IC COMPTR TTL LS MAGTD 4-BIT	01295	SN74LS85N
A12U503	1820-1216	3	2	IC DCDR TTL LS 3-TO-8-LINE 3-INP	01295	SN74LS138N
A12U504	1810-0338	7		NETWORK-RES 16-DIP100.0 OHM X 8	11236	761-3-R100
A12U506	1820-1197	9	1	IC GATE TTL LS NAND QUAD 2-INP	01295	SN74LS00N
A12U507	1820-1437	0	1	IC MV TTL LS MONOSTBL DUAL	01295	SN74LS221N
A12U508	1820-1198	0	1	IC GATE TTL LS NAND QUAD 2-INP	01295	SN74LS03N
A12U602	1810-0338	7		NETWORK-RES 16-DIP100.0 OHM X 8	11236	761-3-R100
A12U603	1810-0338	7		NETWORK-RES 16-DIP100.0 OHM X 8	11236	761-3-R100
A12U604	1820-1419	8		IC COMPTR TTL LS MAGTD 4-BIT	01295	SN74LS85N
A12U606	1820-1204	9	1	IC GATE TTL LS NAND DUAL 4-INP	01295	SN74LS20N
A12U607	1820-1205	0	1	IC GATE TTL LS AND DUAL 4-INP	01295	SN74LS21N
A12U608	1820-1201	6	1	IC GATE TTL LS AND QUAD 2-INP	01295	SN74LS08N
A12U700	1820-2024	3	3	IC DRVR TTL LS LINE DRVR OCTL	01295	SN74LS244N
A12U702	1820-2024	3		IC DRVR TTL LS LINE DRVR OCTL	01295	SN74LS244N
A12U703	1820-2024	3		IC DRVR TTL LS LINE DRVR OCTL	01295	SN74LS244N
A12U704	1820-2075	4	1	IC MISC TTL LS	01295	SN74LS245N
A12U706	1820-1216	3		IC DCDR TTL LS 3-TO-8-LINE 3-INP	01295	SN74LS138N
A12U707	1820-1281	2		IC DCDR TTL LS 2-TO-4-LINE DUAL 2-INP	01295	SN74LS139N
A12XU100	1200-0567	1	10	SOCKET-IC 28-CONT DIP DIP-SLDR	28480	1200-0567
A12XU102	1200-0567	1		SOCKET-IC 28-CONT DIP DIP-SLDR	28480	1200-0567
A12XU104	1200-0567	1		SOCKET-IC 28-CONT DIP DIP-SLDR	28480	1200-0567
A12XU106	1200-0539	7	2	SOCKET-IC 18-CONT DIP DIP-SLDR	28480	1200-0539
A12XU107	1200-0539	7		SOCKET-IC 18-CONT DIP DIP-SLDR	28480	1200-0539
A12XU200	1200-0567	1		SOCKET-IC 28-CONT DIP DIP-SLDR	28480	1200-0567
A12XU202	1200-0567	1		SOCKET-IC 28-CONT DIP DIP-SLDR	28480	1200-0567
A12XU204	1200-0567	1		SOCKET-IC 28-CONT DIP DIP-SLDR	28480	1200-0567
A12XU300	1200-0567	1		SOCKET-IC 28-CONT DIP DIP-SLDR	28480	1200-0567
A12XU302	1200-0567	1		SOCKET-IC 28-CONT DIP DIP-SLDR	28480	1200-0567
A12XU304	1200-0567	1		SOCKET-IC 28-CONT DIP DIP-SLDR	28480	1200-0567
A12XU308	1200-0541	1	1	SOCKET-IC 24-CONT DIP DIP-SLDR	28480	1200-0541
A12XU400	1200-0567	1		SOCKET-IC 28-CONT DIP DIP-SLDR	28480	1200-0567
A12Y1	0410-1294	7	1	CRYSTAL-QUARTZ 32.768 KHZ	28480	0410-1294
	1480-0116	8	2	PIN-GRV .062-IN-DIA .25-IN-LG STL	28480	1480-0116
	4040-0747	2	2	EXTR-PC BD GRA POLYC .062-BD-THKNS	28480	4040-0747
	5080-8549	3	1	A12 ID LABEL	28480	5080-8549
	0470-1145	3	1	ADHESIVE HOT MELT	28480	0470-1145

See introduction to this section for ordering information
*Indicates factory selected value

Table 6-2. 4945A Replaceable Parts (Cont'd)

Reference Designation	HP Part Number	C D	Qty	Description	Mfr Code	Mfr Part Number
A13	04945-60013	7	1	VIDEO GENERATOR	28480	04945-60013
A13C1	0160-5298	8	28	CAPACITOR-FXD .01UF +-20% 100VDC CER	28480	0160-5298
A13C2	0160-5298	8		CAPACITOR-FXD .01UF +-20% 100VDC CER	28480	0160-5298
A13C3	0160-5099	7	1	CAPACITOR-FXD 3300PF +-5% 100VDC CER	16299	CAC05C0G332J100A
A13C4	0160-5298	8		CAPACITOR-FXD .01UF +-20% 100VDC CER	28480	0160-5298
A13C5	0160-5298	8		CAPACITOR-FXD .01UF +-20% 100VDC CER	28480	0160-5298
A13C6	0160-5298	8		CAPACITOR-FXD .01UF +-20% 100VDC CER	28480	0160-5298
A13C7	0160-5298	8		CAPACITOR-FXD .01UF +-20% 100VDC CER	28480	0160-5298
A13C8	0160-5298	8		CAPACITOR-FXD .01UF +-20% 100VDC CER	28480	0160-5298
A13C9	0160-5298	8		CAPACITOR-FXD .01UF +-20% 100VDC CER	28480	0160-5298
A13C10	0160-5298	8		CAPACITOR-FXD .01UF +-20% 100VDC CER	28480	0160-5298
A13C11	0160-5298	8		CAPACITOR-FXD .01UF +-20% 100VDC CER	28480	0160-5298
A13C12	0160-0194	3	2	CAPACITOR-FXD .015UF +-10% 200VDC POLYE	28480	0160-0194
A13C13	0160-5298	8		CAPACITOR-FXD .01UF +-20% 100VDC CER	28480	0160-5298
A13C14	0160-5298	8		CAPACITOR-FXD .01UF +-20% 100VDC CER	28480	0160-5298
A13C15	0160-0194	3		CAPACITOR-FXD .015UF +-10% 200VDC POLYE	28480	0160-0194
A13C16	0160-5298	8		CAPACITOR-FXD .01UF +-20% 100VDC CER	28480	0160-5298
A13C17	0160-5298	8		CAPACITOR-FXD .01UF +-20% 100VDC CER	28480	0160-5298
A13C18	0160-5298	8		CAPACITOR-FXD .01UF +-20% 100VDC CER	28480	0160-5298
A13C19	0160-5298	8		CAPACITOR-FXD .01UF +-20% 100VDC CER	28480	0160-5298
A13C20	0160-5298	8		CAPACITOR-FXD .01UF +-20% 100VDC CER	28480	0160-5298
A13C21	0180-2208	6	1	CAPACITOR-FXD 220UF+-10% 10VDC TA	56289	150D227X9010S2
A13C22	0170-0040	9	1	CAPACITOR-FXD .047UF +-10% 200VDC POLYE	56289	292P47392
A13C23	0180-0374	3	6	CAPACITOR-FXD 10UF+-10% 20VDC TA	56289	150D106X9020B2
A13C24	0160-5298	8		CAPACITOR-FXD .01UF +-20% 100VDC CER	28480	0160-5298
A13C25	0160-5298	8		CAPACITOR-FXD .01UF +-20% 100VDC CER	28480	0160-5298
A13C26	0160-5298	8		CAPACITOR-FXD .01UF +-20% 100VDC CER	28480	0160-5298
A13C27	0160-5298	8		CAPACITOR-FXD .01UF +-20% 100VDC CER	28480	0160-5298
A13C28	0160-5298	8		CAPACITOR-FXD .01UF +-20% 100VDC CER	28480	0160-5298
A13C29	0160-5298	8		CAPACITOR-FXD .01UF +-20% 100VDC CER	28480	0160-5298
A13C30	0160-5298	8		CAPACITOR-FXD .01UF +-20% 100VDC CER	28480	0160-5298
A13C31	0160-5298	8		CAPACITOR-FXD .01UF +-20% 100VDC CER	28480	0160-5298
A13C32	0160-5298	8		CAPACITOR-FXD .01UF +-20% 100VDC CER	28480	0160-5298
A13C33	0160-4822	2	1	CAPACITOR-FXD 1000PF +-5% 100VDC CER	28480	0160-4822
A13C34	0180-0374	3		CAPACITOR-FXD 10UF+-10% 20VDC TA	56289	150D106X9020B2
A13C35	0180-0374	3		CAPACITOR-FXD 10UF+-10% 20VDC TA	56289	150D106X9020R2
A13C36	0180-0374	3		CAPACITOR-FXD 10UF+-10% 20VDC TA	56289	150D106X9020B2
A13C37	0160-5298	8		CAPACITOR-FXD .01UF +-20% 100VDC CER	28480	0160-5298
A13C38	0160-5298	8		CAPACITOR-FXD .01UF +-20% 100VDC CER	28480	0160-5298
A13C39	0180-0374	3		CAPACITOR-FXD 10UF+-10% 20VDC TA	56289	150D106X9020R2
A13C40	0180-0374	3		CAPACITOR-FXD 10UF+-10% 20VDC TA	56289	150D106X9020B2
A13C41	0160-3508	9	1	CAPACITOR-FXD 1UF +80-20% 50VDC CER	28480	0160-3508
A13CR1	1901-0050	3	1	DIODE-SWITCHING 80V 200MA 2NS DO-35	28480	1901-0050
A13E509	1251-8042	0	1	SHUNT-DIP 5 POSITION; DUAL INLINE PKG	28480	1251-8042
A13J1	1251-7899	3	1	CONN-POST TYPE .100-PIN-SPCG 7-CONT	28480	1251-7899
A13P1	1251-7506	9	1	CONN-POST TYPE .100-PIN-SPCG 120-CONT	28480	1251-7506
A13R1	0757-0443	0	1	RESISTOR 11K 1% .125W F TC=0+-100	24546	C4-1/8-T0-1102-F
A13R3	0757-0420	3	1	RESISTOR 750K 1% .125W F TC=0+-100	28480	0757-0420
A13R4	0757-0438	3	2	RESISTOR 5.11K 1% .125W F TC=0+-100	24546	C4-1/8-T0-5111-F
A13R5	0757-0462	3	1	RESISTOR 75K 1% .125W F TC=0+-100	24546	C4-1/8-T0-7502-F
A13R6	0757-0123	3	1	RESISTOR 34.8K 1% .125W F TC=0+-100	28480	0757-0123
A13R7	0757-0441	8	1	RESISTOR 8.25K 1% .125W F TC=0+-100	24546	C4-1/8-T0-8251-F
A13R8	0757-0440	7	1	RESISTOR 7.5K 1% .125W F TC=0+-100	24546	C4-1/8-T0-7501-F
A13R9	0757-0280	3	2	RESISTOR 1K 1% .125W F TC=0+-100	24546	C4-1/8-T0-1001-F
A13R10	0757-0280	3		RESISTOR 1K 1% .125W F TC=0+-100	24546	C4-1/8-T0-1001-F
A13R11	0757-0463	4	1	RESISTOR 82.5K 1% .125W F TC=0+-100	24546	C4-1/8-T0-8252-F
A13R12	0698-3151	7	1	RESISTOR 2.87K 1% .125W F TC=0+-100	24546	C4-1/8-T0-2871-F
A13R13	0757-0346	2	1	RESISTOR 10 1% .125W F TC=0+-100	24546	C4-1/8-T0-10R0-F
A13R14	0757-0466	7	1	RESISTOR 110K 1% .125W F TC=0+-100	24546	C4-1/8-T0-1103-F
A13R15	0757-0458	7	1	RESISTOR 51.1K 1% .125W F TC=0+-100	24546	C4-1/8-T0-5112-F
A13R16	0757-0465	6	1	RESISTOR 100K 1% .125W F TC=0+-100	24546	C4-1/8-T0-1003-F
A13R17	0757-0442	9	1	RESISTOR 10K 1% .125W F TC=0+-100	24546	C4-1/8-T0-1002-F
A13R18	0698-3159	5	1	RESISTOR 26.1K 1% .125W F TC=0+-100	24546	C4-1/8-T0-2612-F
A13R19	3683-1855	3	1	RESISTOR 1.8M 5% .25W FC TC=-900/+1100	01121	CB1855
A13R20	0698-8961	7	1	RESISTOR 909K 1% .125W F TC=0+-100	20480	0698-8961
A13R21	0698-3266	5	1	RESISTOR 237K 1% .125W F TC=0+-100	24546	C4-1/8-T0-2373-F
A13R22	0698-3260	9	1	RESISTOR 464K 1% .125W F TC=0+-100	28480	0698-3260
A13R23	0757-0438	3		RESISTOR 5.11K 1% .125W F TC=0+-100	24546	C4-1/8-T0-5111-F

See introduction to this section for ordering information
*Indicates factory selected value

Table 6-2. 4945A Replaceable Parts (Cont'd)

Reference Designation	HP Part Number	C D	Qty	Description	Mfr Code	Mfr Part Number
A13TP1	1251-5618	0	1	CONNECTOR 8-PIN M POST TYPE	28480	1251-5618
A13TP2	0360-1682	0	4	TERMINAL-STUD SGL-TUR PRESS-MTG	28480	0360-1682
A13TP3	0360-1682	0		TERMINAL-STUD SGL-TUR PRESS-MTG	28480	0360-1682
A13TP4	0360-1682	0		TERMINAL-STUD SGL-TUR PRESS-MTG	28480	0360-1682
A13TP5	0360-1682	0		TERMINAL-STUD SGL-TUR PRESS-MTG	28480	0360-1682
A13U200	1820-1437	0	1	IC MV TTL LS MONOSTBL DUAL	01295	SN74LS221N
A13U201	1820-1216	3	1	IC DCDR TTL LS 3-TO-8-LINE 3-INP	01295	SN74LS138N
A13U202	1818-1738	9	7	IC CMOS 16384 (16K) STAT RAM 200-NS 3-S	S4013	HM6116LP-4
A13U203	1818-1738	9		IC CMOS 16384 (16K) STAT RAM 200-NS 3-S	S4013	HM6116LP-4
A13U205	1818-1738	9		IC CMOS 16384 (16K) STAT RAM 200-NS 3-S	S4013	HM6116LP-4
A13U206	1818-1738	9		IC CMOS 16384 (16K) STAT RAM 200-NS 3-S	S4013	HM6116LP-4
A13U300	1820-1198	0	1	IC GATE TTL LS NAND QUAD 2-INP	01295	SN74LS03N
A13U302	1820-1470	1	6	IC MUXR/DATA-SEL TTL LS 2-TO-1-LINE QUAD	01295	SN74LS157N
A13U303	1820-3123	5	1	IC-CRT VIDEO DISPLAY CONTROLLER 7X11X128	28480	1820-3123
A13U305	1818-1738	9		IC CMOS 16384 (16K) STAT RAM 200-NS 3-S	S4013	HM6116LP-4
A13U306	1818-1738	9		IC CMOS 16384 (16K) STAT RAM 200-NS 3-S	S4013	HM6116LP-4
A13U400	1820-1470	1		IC MUXR/DATA-SEL TTL LS 2-TO-1-LINE QUAD	01295	SN74LS157N
A13U402	1820-1470	1		IC MUXR/DATA-SEL TTL LS 2-TO-1-LINE QUAD	01295	SN74LS157N
A13U403	1820-0603	6	1	IC INV TTL S HEX 1-INP	01295	SN74S04N
A13U404	1820-0693	8	1	IC FF TTL S D-TYPE POS-EDGE-TRIG	01295	SN74S74N
A13U405	1820-2075	4	3	IC MISC TTL LS	01295	SN74LS245N
A13U406	1826-0205	0	1	IC TIMER TTL	18324	NE556A
A13U501	04945-10022	3	1	CHARACTER PROM	28480	04945-10022
A13U502	1818-1372	7	1	IC NMOS 8192 (8K) STAT RAM 90-NS	50088	MK4801P-90
A13U503	1818-1738	9		IC CMOS 16384 (16K) STAT RAM 200-NS 3-S	S4013	HM6116LP-4
A13U600	1820-1199	1	1	IC INV TTL LS HEX 1-INP	01295	SN74LS04N
A13U601	1820-1281	2	1	IC DCDR TTL LS 2-TO-4-LINE DUAL 2-INP	01295	SN74LS139N
A13U604	1820-2075	4		IC MISC TTL LS	01295	SN74LS245N
A13U606	1826-0740	8	1	IC SWITCH ANLG DUAL 16-DIP-C PKG	32293	IH5043CDE
A13U700	1820-1201	6	1	IC GATE TTL LS AND QUAD 2-INP	01295	SN74LS08N
A13U701	1820-1208	3	1	IC GATE TTL LS OR QUAD 2-INP	01295	SN74LS32N
A13U702	1820-2853	6	1	IC-MC68A45L	28480	1820-2853
A13U704	1820-2075	4		IC MISC TTL LS	01295	SN74LS245N
A13U705	1826-0682	7	1	IC AUDIO AMPL PWR 8-DIP-P PKG	27014	LM386N-1
A13U706	1820-1725	9	1	IC MULTIPLXR ANLG 16-DIP-P PKG	17856	DG508CJ
A13U801	1820-1470	1		IC MUXR/DATA-SEL TTL LS 2-TO-1-LINE QUAD	01295	SN74LS157N
A13U802	1820-1470	1		IC MUXR/DATA-SEL TTL LS 2-TO-1-LINE QUAD	01295	SN74LS157N
A13U803	1820-1470	1		IC MUXR/DATA-SEL TTL LS 2-TO-1-LINE QUAD	01295	SN74LS157N
A13U806	1826-0276	5	1	IC 78L05A V RGLTR TO-92	04713	MC78L05ACP
A13XU303	1200-0567	1	1	SOCKET-IC 28-CONT DIP DIP-SLDR	28480	1200-0567
A13XU501	1200-0541	1	2	SOCKET-IC 24-CONT DIP DIP-SLDR	28480	1200-0541
A13XU502	1200-0541	1		SOCKET-IC 24-CONT DIP DIP-SLDR	28480	1200-0541
A13XU702	1200-0654	7	1	SOCKET-IC 40-CONT DIP DIP-SLDR	28480	1200-0654
	1480-0116	8	2	PIN-GRV .062-IN-DIA .25-IN-LG STL	28480	1480-0116
	4040-0747	2	2	EXTR-PC BD GRA POLYC .062-BD-THKNS	28480	4040-0747
	5080-8550	6	1	A13 ID LABEL	28480	5080-8550

See introduction to this section for ordering information
*Indicates factory selected value

Table 6-2. 4945A Replaceable Parts (Cont'd)

Reference Designation	HP Part Number	C D	Qty	Description	Mfr Code	Mfr Part Number
A14	04945-60015	9	1	TRANSMIT CONTROL	28480	04945-60015
A14C1	0160-5332	1	24	CAPACITOR-FXD .1UF +-20% 50VDC CER	28480	0160-5332
A14C2	0160-5332	1		CAPACITOR-FXD .1UF +-20% 50VDC CER	28480	0160-5332
A14C3	0160-5332	1		CAPACITOR-FXD .1UF +-20% 50VDC CER	28480	0160-5332
A14C4	0160-5332	1		CAPACITOR-FXD .1UF +-20% 50VDC CER	28480	0160-5332
A14C5	0160-5332	1		CAPACITOR-FXD .1UF +-20% 50VDC CER	28480	0160-5332
A14C6	0160-5332	1		CAPACITOR-FXD .1UF +-20% 50VDC CER	28480	0160-5332
A14C7	0160-5332	1		CAPACITOR-FXD .1UF +-20% 50VDC CER	28480	0160-5332
A14C8	0160-5332	1		CAPACITOR-FXD .1UF +-20% 50VDC CER	28480	0160-5332
A14C9	0160-5332	1		CAPACITOR-FXD .1UF +-20% 50VDC CER	28480	0160-5332
A14C10	0160-5332	1		CAPACITOR-FXD .1UF +-20% 50VDC CER	28480	0160-5332
A14C11	0160-5332	1		CAPACITOR-FXD .1UF +-20% 50VDC CER	28480	0160-5332
A14C12	0160-5332	1		CAPACITOR-FXD .1UF +-20% 50VDC CER	28480	0160-5332
A14C13	0160-5332	1		CAPACITOR-FXD .1UF +-20% 50VDC CER	28480	0160-5332
A14C14	0160-5332	1		CAPACITOR-FXD .1UF +-20% 50VDC CER	28480	0160-5332
A14C15	0160-5332	1		CAPACITOR-FXD .1UF +-20% 50VDC CER	28480	0160-5332
A14C17	0160-5332	1		CAPACITOR-FXD .1UF +-20% 50VDC CER	28480	0160-5332
A14C18	0160-5332	1		CAPACITOR-FXD .1UF +-20% 50VDC CER	28480	0160-5332
A14C19	0180-1746	5	2	CAPACITOR-FXD 15UF+-10% 20VDC TA	56289	150D156X9020B2
A14C20	0180-1746	5		CAPACITOR-FXD 15UF+-10% 20VDC TA	56289	150D156X9020B2
A14C22	0160-5332	1		CAPACITOR-FXD .1UF +-20% 50VDC CER	28480	0160-5332
A14C23	0160-5332	1		CAPACITOR-FXD .1UF +-20% 50VDC CER	28480	0160-5332
A14C24	0160-5660	8	2	CAPACITOR-FXD 5100PF +-1% 100VDC CER	28480	0160-5660
A14C25	0160-5660	8		CAPACITOR-FXD 5100PF +-1% 100VDC CER	28480	0160-5660
A14C27	0160-5332	1		CAPACITOR-FXD .1UF +-20% 50VDC CER	28480	0160-5332
A14C28	0160-5332	1		CAPACITOR-FXD .1UF +-20% 50VDC CER	28480	0160-5332
A14C29	0160-5332	1		CAPACITOR-FXD .1UF +-20% 50VDC CER	28480	0160-5332
A14C30	0160-5332	1		CAPACITOR-FXD .1UF +-20% 50VDC CER	28480	0160-5332
A14C31	0160-5332	1		CAPACITOR-FXD .1UF +-20% 50VDC CER	28480	0160-5332
A14C32	0160-0127	2	2	CAPACITOR-FXD 1UF +-20% 25VDC CER	28480	0160-0127
A14C33	0160-0127	2		CAPACITOR-FXD 1UF +-20% 25VDC CER	28480	0160-0127
A14C34	0180-0374	3	3	CAPACITOR-FXD 10UF+-10% 20VDC TA	56289	150D106X9020B2
A14C35	0180-0374	3		CAPACITOR-FXD 10UF+-10% 20VDC TA	56289	150D106X9020B2
A14C36	0180-0374	3		CAPACITOR-FXD 10UF+-10% 20VDC TA	56289	150D106X9020B2
A14J1	1251-7506	9	1	CONN-POST TYPE .100-PIN-SPCG 120-CONT	28480	1251-7506
A14R2	0757-0465	6	2	RESISTOR 100K 1% .125W F TC=0+-100	24546	C4-1/8-T0-1003-F
A14R4	0699-0567	5	1	RESISTOR 137K .1% .125W F TC=0+-25	28480	0699-0567
A14R5	0757-0463	4	2	RESISTOR 82.5K 1% .125W F TC=0+-100	24546	C4-1/8-T0-8252-F
A14R6	0757-0463	4		RESISTOR 82.5K 1% .125W F TC=0+-100	24546	C4-1/8-T0-8252-F
A14R7	0698-5496	7	1	RESISTOR 255K .1% .125W F TC=0+-50	28480	0698-5496
A14R8	0757-0465	6		RESISTOR 100K 1% .125W F TC=0+-100	24546	C4-1/8-T0-1003-F
A14R11	0698-6363	9	1	RESISTOR 40K .1% .125W F TC=0+-25	28480	0698-6363
A14R12	0698-6358	2	1	RESISTOR 100K .1% .125W F TC=0+-25	28480	0698-6358
A14R14	0757-0438	3	4	RESISTOR 5.11K 1% .125W F TC=0+-100	24546	C4-1/8-T0-5111-F
A14R15	0757-0438	3		RESISTOR 5.11K 1% .125W F TC=0+-100	24546	C4-1/8-T0-5111-F
A14R16	0757-0438	3		RESISTOR 5.11K 1% .125W F TC=0+-100	24546	C4-1/8-T0-5111-F
A14R17	0757-0438	3		RESISTOR 5.11K 1% .125W F TC=0+-100	24546	C4-1/8-T0-5111-F
A14R18	0698-3260	9	2	RESISTOR 464K 1% .125W F TC=0+-100	28480	0698-3260
A14R19	0699-0035	2	2	RESISTOR 284.2K .25% .125W F TC=0+-50	28480	0699-0035
A14R20	0698-3260	9		RESISTOR 464K 1% .125W F TC=0+-100	28480	0698-3260
A14R21	0757-0472	5	1	RESISTOR 200K 1% .125W F TC=0+-100	24546	C4-1/8-T0-2003-F
A14R22	0698-3454	3	2	RESISTOR 215K 1% .125W F TC=0+-100	24546	C4-1/8-T0-2153-F
A14R23	0699-0035	2		RESISTOR 284.2K .25% .125W F TC=0+-50	28480	0699-0035
A14R24	0698-3454	3		RESISTOR 215K 1% .125W F TC=0+-100	24546	C4-1/8-T0-2153-F
A14R25	0698-3158	4	1	RESISTOR 23.7K 1% .125W F TC=0+-100	24546	C4-1/8-T0-2372-F
A14R26	0757-0401	0	2	RESISTOR 100 1% .125W F TC=0+-100	24546	C4-1/8-T0-101-F
A14R27	0698-3266	5	1	RESISTOR 237K 1% .125W F TC=0+-100	24546	C4-1/8-T0-2373-F
A14R28	0698-3136	8	1	RESISTOR 17.8K 1% .125W F TC=0+-100	24546	C4-1/8-T0-1782-F
A14R29	0757-0401	0		RESISTOR 100 1% .125W F TC=0+-100	24546	C4-1/8-T0-101-F
A14TP1	1251-4670	2	1	CONNECTOR 3-PIN M POST TYPE	28480	1251-4670
A14TP2	1251-4670	2	1	CONNECTOR 3-PIN M POST TYPE	28480	1251-4670
A14TP807	1251-5925	2	1	CONNECTOR 12-PIN M POST TYPE	28480	1251-5925
A14TP901	0360-1682	0	3	TERMINAL-STUD SGL-TUR PRESS-MTG	28480	0360-1682
A14TP902	0360-1682	0		TERMINAL-STUD SGL-TUR PRESS-MTG	28480	0360-1682
A14TP907	0360-1682	0		TERMINAL-STUD SGL-TUR PRESS-MTG	28480	0360-1682
A14U101	1820-1730	6	3	IC FF TTL LS D-TYPE POS-EDGE-TRIG COM	01295	SN74LS273N
A14U104	1820-1730	6		IC FF TTL LS D-TYPE POS-EDGE-TRIG COM	01295	SN74LS273N
A14U105	1820-1730	6		IC FF TTL LS D-TYPE POS-EDGE-TRIG COM	01295	SN74LS273N
A14U200	1820-1447	2	10	IC TTL LS 16-BIT STAT RAM 45-NS 3-S	01295	SN74LS670N
A14U202	1820-1447	2		IC TTL LS 16-BIT STAT RAM 45-NS 3-S	01295	SN74LS670N
A14U203	1820-1447	2		IC TTL LS 16-BIT STAT RAM 45-NS 3-S	01295	SN74LS670N
A14U204	1820-1447	2		IC TTL LS 16-BIT STAT RAM 45-NS 3-S	01295	SN74LS670N
A14U205	1820-1447	2		IC TTL LS 16-BIT STAT RAM 45-NS 3-S	01295	SN74LS670N
A14U206	1820-1447	2		IC TTL LS 16-BIT STAT RAM 45-NS 3-S	01295	SN74LS670N
A14U300	1820-1441	6	6	IC ADDR TTL LS BIN FULL ADDR 4-BIT	01295	SN74LS283N

See introduction to this section for ordering information
*Indicates factory selected value

Table 6-2. 4945A Replaceable Parts (Cont'd)

Reference Designation	HP Part Number	C D	Qty	Description	Mfr Code	Mfr Part Number
A14U302	1820-1441	6		IC ADDR TTL LS BIN FULL ADDR 4-BIT	01295	SN74LS283N
A14U303	1820-1441	6		IC ADDR TTL LS BIN FULL ADDR 4-BIT	01295	SN74LS283N
A14U304	1820-1441	6		IC ADDR TTL LS BIN FULL ADDR 4-BIT	01295	SN74LS283N
A14U305	1820-1441	6		IC ADDR TTL LS BIN FULL ADDR 4-BIT	01295	SN74LS283N
A14U306	1820-1441	6		IC ADDR TTL LS BIN FULL ADDR 4-BIT	01295	SN74LS283N
A14U400	1820-1977	3	1	IC OSC ECL	04713	MC12061P
A14U402	1820-1447	2		IC TTL LS 16-BIT STAT RAM 45-NS 3-S	01295	SN74LS670N
A14U403	1820-1447	2		IC TTL LS 16-BIT STAT RAM 45-NS 3-S	01295	SN74LS670N
A14U404	1820-1447	2		IC TTL LS 16-BIT STAT RAM 45-NS 3-S	01295	SN74LS670N
A14U405	1820-1447	2		IC TTL LS 16-BIT STAT RAM 45-NS 3-S	01295	SN74LS670N
A14U406	1820-1211	8	1	IC GATE TTL LS EXCL-OR QUAD 2-INP	01295	SN74LS86N
A14U500	1820-1443	8	2	IC CNTR TTL LS BIN ASYNCHRO	01295	SN74LS293N
A14U501	1820-1144	6	1	IC GATE TTL LS NOR QUAD 2-INP	01295	SN74LS02N
A14U502	1820-1197	9	1	IC GATE TTL LS NAND QUAD 2-INP	01295	SN74LS00N
A14U506	1820-1112	8	1	IC FF TTL LS D-TYPE POS-EDGE-TRIG	01295	SN74LS74AN
A14U600	1820-1217	4	1	IC MUXR/DATA-SEL TTL LS 8-TO-1-LINE	01295	SN74LS151N
A14U601	1820-1492	7	1	IC BFR TTL LS INV HEX 1-INP	01295	SN74LS368AN
A14U603	1820-1212	9	1	IC FF TTL LS J-K NEG-EDGE-TRIG	01295	SN74LS112AN
A14U604	1820-1199	1	1	IC INV TTL LS HEX 1-INP	01295	SN74LS04N
A14U605	1826-0740	8	1	IC SWITCH ANLG DUAL 16-DIP-C PKG	32293	IH5043CDE
A14U700	1820-1991	1	1	IC CNTR TTL LS DECD DUAL 4-BIT	01295	SN74LS390N
A14U701	1820-1443	8		IC CNTR TTL LS BIN ASYNCHRO	01295	SN74LS293N
A14U702	1820-1287	8	1	IC BFR TTL LS NAND QUAD 2-INP	01295	SN74LS37N
A14U703	1820-2096	9	1	IC CNTR TTL LS BIN DUAL 4-BIT	01295	SN74LS393N
A14U800	1820-1281	2	1	IC DCDR TTL LS 2-TO-4-LINE DUAL 2-INP	01295	SN74LS139N
A14U801	1820-1431	4	2	IC CNTR TTL LS DECD SYNCHRO	01295	SN74LS162AN
A14U802	1820-1431	4		IC CNTR TTL LS DECD SYNCHRO	01295	SN74LS162AN
A14U803	1820-1858	9	1	IC FF TTL LS D-TYPE OCTL	01295	SN74LS377N
A14U804	1820-0976	0	1	IC SHF-RGTR CMOS D-TYPE SERIAL-IN	3L585	CD4015BE
A14U805	1826-0328	8	1	IC OP AMP GP DUAL 8-DIP-C PKG	07933	RV4558DE
A14U900	1820-1216	3	1	IC DCDR TTL LS 3-TO-8-LINE 3-INP	01295	SN74LS138N
A14U901	1820-3210	1	1	IC-ASYNCH. COMMUN INTERFACE ADAPTER	28480	1820-3210
A14U903	1820-2024	3	1	IC DRVR TTL LS LINE DRVR OCTL	01295	SN74LS244N
A14XU901	1200-0541	1	1	SOCKET-IC 24-CONT DIP DIP-SLDR	28480	1200-0541
A14Y1	0410-1220	9	1	CRYSTAL-QUARTZ 4.194304 MHZ HC-49/U-HLDR	28480	0410-1220
	1480-0116	8	2	PIN-GRV .062-IN-DIA .25-IN-LG STL	28480	1480-0116
	4040-0745	0	2	SEAL LIGHT	28480	4040-0745
	5080-8552	8	1	A14 ID LABEL	28480	5080-8552

See introduction to this section for ordering information
*Indicates factory selected value

Table 6-2. 4945A Replaceable Parts (Cont'd)

Reference Designation	HP Part Number	C D	Qty	Description	Mfr Code	Mfr Part Number
A15	04945-60016	0	1	WAVEFORM GEN BD	28480	04945-60016
A15C1	0160-0153	4	1	CAPACITOR-FXD 1000PF +-10% 200VDC POLYE	28480	0160-0153
A15C2	0160-5332	1	28	CAPACITOR-FXD .1UF +-20% 50VDC CER	28480	0160-5332
A15C3	0160-5332	1		CAPACITOR-FXD .1UF +-20% 50VDC CER	28480	0160-5332
A15C4	0180-0374	3	5	CAPACITOR-FXD 10UF+-10% 20VDC TA	56289	150D106X9020B2
A15C5	0160-2257	3	2	CAPACITOR-FXD 10PF +-5% 500VDC CER 0+-60	28480	0160-2257
A15C6	0160-5332	1		CAPACITOR-FXD .1UF +-20% 50VDC CER	28480	0160-5332
A15C7	0160-5332	1		CAPACITOR-FXD .1UF +-20% 50VDC CER	28480	0160-5332
A15C8	0160-5332	1		CAPACITOR-FXD .1UF +-20% 50VDC CER	28480	0160-5332
A15C9	0160-5332	1		CAPACITOR-FXD .1UF +-20% 50VDC CER	28480	0160-5332
A15C10	0160-5332	1		CAPACITOR-FXD .1UF +-20% 50VDC CER	28480	0160-5332
A15C11	0160-5332	1		CAPACITOR-FXD .1UF +-20% 50VDC CER	28480	0160-5332
A15C12	0180-0374	3		CAPACITOR-FXD 10UF+-10% 20VDC TA	56289	150D106X9020B2
A15C13	0160-2387	0	1	CAPACITOR-FXD 1000PF +-1% 500VDC MICA	28480	0160-2387
A15C14	0160-4786	7	1	CAPACITOR-FXD 27PF +-5% 100VDC CER 0+-30	28480	0160-4786
A15C15	0160-5332	1		CAPACITOR-FXD .1UF +-20% 50VDC CER	28480	0160-5332
A15C16	0160-5332	1		CAPACITOR-FXD .1UF +-20% 50VDC CER	28480	0160-5332
A15C17	0160-5332	1		CAPACITOR-FXD .1UF +-20% 50VDC CER	28480	0160-5332
A15C18	0160-4426	2	5	CAPACITOR-FXD .01UF +-1% 100VDC CER	28480	0160-4426
A15C19	0160-5332	1		CAPACITOR-FXD .1UF +-20% 50VDC CER	28480	0160-5332
A15C20	0160-5332	1		CAPACITOR-FXD .1UF +-20% 50VDC CER	28480	0160-5332
A15C21	0160-5695	9	1	CAPACITOR-FXD .1UF +-1% 200VDC MET-POLYC	28480	0160-5695
A15C22	0160-5660	8	1	CAPACITOR-FXD 5100PF +-1% 100VDC CER	28480	0160-5660
A15C23	0160-4426	2		CAPACITOR-FXD .01UF +-1% 100VDC CER	28480	0160-4426
A15C24	0160-4426	2		CAPACITOR-FXD .01UF +-1% 100VDC CER	28480	0160-4426
A15C25	0160-5332	1		CAPACITOR-FXD .1UF +-20% 50VDC CER	28480	0160-5332
A15C26	0160-5657	3	3	CAPACITOR-FXD 1200PF +-1% 100VDC CER	28480	0160-5657
A15C27	0160-5657	3		CAPACITOR-FXD 1200PF +-1% 100VDC CER	28480	0160-5657
A15C28	0160-5657	3		CAPACITOR-FXD 1200PF +-1% 100VDC CER	28480	0160-5657
A15C29	0160-5332	1		CAPACITOR-FXD .1UF +-20% 50VDC CER	28480	0160-5332
A15C30	0180-0374	3		CAPACITOR-FXD 10UF+-10% 20VDC TA	56289	150D106X9020B2
A15C31	0160-4089	3	1	CAPACITOR-FXD 2200PF +-1% 500VDC MICA	28480	0160-4089
A15C32	0140-0205	5	1	CAPACITOR-FXD 62PF +-5% 300VDC MICA	72136	DM15E620J0300WV1CR
A15C33	0160-5332	1		CAPACITOR-FXD .1UF +-20% 50VDC CER	28480	0160-5332
A15C34	0160-5332	1		CAPACITOR-FXD .1UF +-20% 50VDC CER	28480	0160-5332
A15C35	0160-5268	2	6	CAPACITOR-FXD .039UF +-1% 50VDC	28480	0160-5268
A15C36	0160-5268	2		CAPACITOR-FXD .039UF +-1% 50VDC	28480	0160-5268
A15C37	0160-5332	1		CAPACITOR-FXD .1UF +-20% 50VDC CER	28480	0160-5332
A15C38	0160-5332	1		CAPACITOR-FXD .1UF +-20% 50VDC CER	28480	0160-5332
A15C39	0180-0374	3		CAPACITOR-FXD 10UF+-10% 20VDC TA	56289	150D106X9020B2
A15C40	0180-0374	3		CAPACITOR-FXD 10UF+-10% 20VDC TA	56289	150D106X9020B2
A15C41	0160-5332	1		CAPACITOR-FXD .1UF +-20% 50VDC CER	28480	0160-5332
A15C42	0160-4426	2		CAPACITOR-FXD .01UF +-1% 100VDC CER	28480	0160-4426
A15C43	0160-5332	1		CAPACITOR-FXD .1UF +-20% 50VDC CER	28480	0160-5332
A15C44	0160-5332	1		CAPACITOR-FXD .1UF +-20% 50VDC CER	28480	0160-5332
A15C45	0160-5268	2		CAPACITOR-FXD .039UF +-1% 50VDC	28480	0160-5268
A15C46	0160-5268	2		CAPACITOR-FXD .039UF +-1% 50VDC	28480	0160-5268
A15C47	0160-5332	1		CAPACITOR-FXD .1UF +-20% 50VDC CER	28480	0160-5332
A15C48	0160-5332	1		CAPACITOR-FXD .1UF +-20% 50VDC CER	28480	0160-5332
A15C49	0160-5268	2		CAPACITOR-FXD .039UF +-1% 50VDC	28480	0160-5268
A15C50	0160-5268	2		CAPACITOR-FXD .039UF +-1% 50VDC	28480	0160-5268
A15C51	0160-5332	1		CAPACITOR-FXD .1UF +-20% 50VDC CER	28480	0160-5332
A15C52	0160-4426	2		CAPACITOR-FXD .01UF +-1% 100VDC CER	28480	0160-4426
A15C53	0160-5332	1		CAPACITOR-FXD .1UF +-20% 50VDC CER	28480	0160-5332
A15C54	0160-2257	3		CAPACITOR-FXD 10PF +-5% 500VDC CER 0+-60	28480	0160-2257
A15C55	0160-5332	1		CAPACITOR-FXD .1UF +-20% 50VDC CER	28480	0160-5332
A15C56	0160-5332	1		CAPACITOR-FXD .1UF +-20% 50VDC CER	28480	0160-5332
A15C57	0160-4801	7	2	CAPACITOR-FXD 100PF +-5% 100VDC CER	28480	0160-4801
A15C58	0160-4801	7		CAPACITOR-FXD 100PF +-5% 100VDC CER	28480	0160-4801
A15CR1	1902-0686	3	2	DIODE-ZNR 6.2V 2% DO-7 PD=.4W TC=+.002%	04713	1N825
A15CR2	1902-0686	3		DIODE-ZNR 6.2V 2% DO-7 PD=.4W TC=+.002%	04713	1N825
A15CR3	1901-0518	8	1	DIODE-SM SIG SCHOTTKY	28480	1901-0518
A15P1	1251-7986	9	1	CONN-POST TYPE .100-PIN-SPCG 50-CONT	28480	1251-7986
A15R1	0757-0394	0	25	RESISTOR 51.1 1% .125W F TC=0+-100	24546	C4-1/8-T0-51R1-F
A15R2	0698-3450	9	2	RESISTOR 42.2K 1% .125W F TC=0+-100	24546	C4-1/8-T0-4222-F
A15R3	0757-0394	0		RESISTOR 51.1 1% .125W F TC=0+-100	24546	C4-1/8-T0-51R1-F
A15R4	0698-3450	9		RESISTOR 42.2K 1% .125W F TC=0+-100	24546	C4-1/8-T0-4222-F
A15R5	0757-1094	9	2	RESISTOR 1.47K 1% .125W F TC=0+-100	24546	C4-1/8-T0-1471-F
A15R6	0757-0394	0		RESISTOR 51.1 1% .125W F TC=0+-100	24546	C4-1/8-T0-51R1-F
A15R7	0757-0288	1	1	RESISTOR 9.09K 1% .125W F TC=0+-100	19701	MF4C1/8-T0-9091-F
A15R8	0757-0199	3	3	RESISTOR 21.5K 1% .125W F TC=0+-100	24546	C4-1/8-T0-2152-F
A15R9	0757-0199	3		RESISTOR 21.5K 1% .125W F TC=0+-100	24546	C4-1/8-T0-2152-F
A15R10	0757-0394	0		RESISTOR 51.1 1% .125W F TC=0+-100	24546	C4-1/8-T0-51R1-F

See introduction to this section for ordering information
*Indicates factory selected value

Table 6-2. 4945A Replaceable Parts (Cont'd)

Reference Designation	HP Part Number	CD	Qty	Description	Mfr Code	Mfr Part Number
A15R11	0757-0394	0		RESISTOR 51.1 1% .125W F TC=0+-100	24546	C4-1/8-T0-51R1-F
A15R12	0757-0394	0		RESISTOR 51.1 1% .125W F TC=0+-100	24546	C4-1/8-T0-51R1-F
A15R13	0757-0199	3		RESISTOR 21.5K 1% .125W F TC=0+-100	24546	C4-1/8-T0-2152-F
A15R14	0757-0394	0		RESISTOR 51.1 1% .125W F TC=0+-100	24546	C4-1/8-T0-51R1-F
A15R15	0757-0394	0		RESISTOR 51.1 1% .125W F TC=0+-100	24546	C4-1/8-T0-51R1-F
A15R16	0757-0394	0		RESISTOR 51.1 1% .125W F TC=0+-100	24546	C4-1/8-T0-51R1-F
A15R17	0698-0085	0	2	RESISTOR 2.61K 1% .125W F TC=0+-100	24546	C4-1/8-T0-2611-F
A15R18	0757-0394	0		RESISTOR 51.1 1% .125W F TC=0+-100	24546	C4-1/8-T0-51R1-F
A15R19	0698-6360	6	16	RESISTOR 10K .1% .125W F TC=0+-25	28480	0698-6360
A15R20	0699-0692	7	1	RESISTOR 1.4K .1% .125W F TC=0+-25	28480	0699-0692
A15R21	0698-6360	6		RESISTOR 10K .1% .125W F TC=0+-25	28480	0698-6360
A15R22	0698-6360	6		RESISTOR 10K .1% .125W F TC=0+-25	28480	0698-6360
A15R23	0699-0079	4	1	RESISTOR 4.667K .1% .1W F TC=0+-10	28480	0699-0079
A15R24	0699-0513	1	1	RESISTOR 4.98K .1% .1W F TC=0+-10	28480	0699-0513
A15R25	0757-0438	3	11	RESISTOR 5.11K 1% .125W F TC=0+-100	24546	C4-1/8-T0-5111-F
A15R26	0757-0438	3		RESISTOR 5.11K 1% .125W F TC=0+-100	24546	C4-1/8-T0-5111-F
A15R27	0757-0438	3		RESISTOR 5.11K 1% .125W F TC=0+-100	24546	C4-1/8-T0-5111-F
A15R28	0698-3512	4	1	RESISTOR 1.18K 1% .125W F TC=0+-100	24546	C4-1/8-T0-1101-F
A15R29	0698-7847	6	1	RESISTOR 1.111K .1% .125W F TC=0+-25	19701	MF4C1/8-T9-1111R-B
A15R30	0698-6360	6		RESISTOR 10K .1% .125W F TC=0+-25	28480	0698-6360
A15R31	0698-6360	6		RESISTOR 10K .1% .125W F TC=0+-25	28480	0698-6360
A15R32	0698-6137	5	1	RESISTOR 328 1% .125W F TC=0+-100	24546	C4-1/8-T0-328R-F
A15R33	0757-0438	3		RESISTOR 5.11K 1% .125W F TC=0+-100	24546	C4-1/8-T0-5111-F
A15R34	0757-0438	3		RESISTOR 5.11K 1% .125W F TC=0+-100	24546	C4-1/8-T0-5111-F
A15R35	0698-6414	1	1	RESISTOR 1K .1% .1W F TC=0+-5	28480	0698-6414
A15R36	0757-0394	0		RESISTOR 51.1 1% .125W F TC=0+-100	24546	C4-1/8-T0-51R1-F
A15R37	0757-0394	0		RESISTOR 51.1 1% .125W F TC=0+-100	24546	C4-1/8-T0-51R1-F
A15R38	0698-7842	1	4	RESISTOR 26.1K .1% .125W F TC=0+-25	19701	MF4C1/8-T9-2612-B
A15R39	0698-7842	1		RESISTOR 26.1K .1% .125W F TC=0+-25	19701	MF4C1/8-T9-2612-B
A15R40	0698-6754	2	1	RESISTOR 44.2K .5% .125W F TC=0+-50	24546	NC4-1/8-T2-4422-D
A15R41	0698-8014	1	1	RESISTOR 22.3K .5% .125W F TC=0+-50	19701	MF4C1/8-T2-2232-D
A15R42	0698-3934	4	1	RESISTOR 42.18K .1% .125W F TC=0+-25	28480	0698-3934
A15R43	0698-7842	1		RESISTOR 26.1K .1% .125W F TC=0+-25	19701	MF4C1/8-T9-2612-B
A15R44	0698-6614	3	1	RESISTOR 7.5K .1% .125W F TC=0+-25	28480	0698-6614
A15R45	0757-0279	0	2	RESISTOR 3.16K 1% .125W F TC=0+-100	24546	C4-1/8-T0-3161-F
A15R46	0757-0279	0		RESISTOR 3.16K 1% .125W F TC=0+-100	24546	C4-1/8-T0-3161-F
A15R47	0757-0394	0		RESISTOR 51.1 1% .125W F TC=0+-100	24546	C4-1/8-T0-51R1-F
A15R48	0757-0424	7	1	RESISTOR 1.1K 1% .125W F TC=0+-100	24546	C4-1/8-T0-1101-F
A15R49	0698-7643	0	1	RESISTOR 6.25K .1% .125W F TC=0+-25	19701	MF4C1/8-T9-6251-B
A15R50	0698-6444	7	1	RESISTOR 21.62K .1% .125W F TC=0+-25	28480	0698-6444
A15R52	0757-0394	0		RESISTOR 51.1 1% .125W F TC=0+-100	24546	C4-1/8-T0-51R1-F
A15R53	0757-0394	0		RESISTOR 51.1 1% .125W F TC=0+-100	24546	C4-1/8-T0-51R1-F
A15R54	0757-0394	0		RESISTOR 51.1 1% .125W F TC=0+-100	24546	C4-1/8-T0-51R1-F
A15R55	0698-6360	6		RESISTOR 10K .1% .125W F TC=0+-25	28480	0698-6360
A15R56	0757-0438	3		RESISTOR 5.11K 1% .125W F TC=0+-100	24546	C4-1/8-T0-5111-F
A15R57	0757-0438	3		RESISTOR 5.11K 1% .125W F TC=0+-100	24546	C4-1/8-T0-5111-F
A15R58	0698-4441	0	1	RESISTOR 3.74K 1% .125W F TC=0+-100	24546	C4-1/8-T0-3741-F
A15R59	0698-4020	1	1	RESISTOR 9.53K 1% .125W F TC=0+-100	24546	C4-1/8-T0-9531-F
A15R60	0698-6360	6		RESISTOR 10K .1% .125W F TC=0+-25	28480	0698-6360
A15R61	0698-3153	9	1	RESISTOR 3.83K 1% .125W F TC=0+-100	24546	C4-1/8-T0-3831-F
A15R62	0757-1094	9		RESISTOR 1.47K 1% .125W F TC=0+-100	24546	C4-1/8-T0-1471-F
A15R63	0757-0438	3		RESISTOR 5.11K 1% .125W F TC=0+-100	24546	C4-1/8-T0-5111-F
A15R64	0698-6360	6		RESISTOR 10K .1% .125W F TC=0+-25	28480	0698-6360
A15R65	0698-3152	8	1	RESISTOR 3.48K 1% .125W F TC=0+-100	24546	C4-1/8-T0-3481-F
A15R66	0698-3151	7	5	RESISTOR 2.87K 1% .125W F TC=0+-100	24546	C4-1/8-T0-2871-F
A15R67	0757-0441	8	1	RESISTOR 8.25K 1% .125W F TC=0+-100	24546	C4-1/8-T0-8251-F
A15R68	0757-0278	9	2	RESISTOR 1.78K 1% .125W F TC=0+-100	24546	C4-1/8-T0-1781-F
A15R69	0757-0394	0		RESISTOR 51.1 1% .125W F TC=0+-100	24546	C4-1/8-T0-51R1-F
A15R70	0698-3151	7		RESISTOR 2.87K 1% .125W F TC=0+-100	24546	C4-1/8-T0-2871-F
A15R71	0698-3454	3	1	RESISTOR 215K 1% .125W F TC=0+-100	24546	C4-1/8-T0-2153-F
A15R72	0698-6359	3	1	RESISTOR 80K .1% .125W F TC=0+-25	28480	0698-6359
A15R73	0698-6360	6		RESISTOR 10K .1% .125W F TC=0+-25	28480	0698-6360
A15R74	0698-3151	7		RESISTOR 2.87K 1% .125W F TC=0+-100	24546	C4-1/8-T0-2871-F
A15R75	0698-6360	6		RESISTOR 10K .1% .125W F TC=0+-25	28480	0698-6360
A15R76	0757-0438	3		RESISTOR 5.11K 1% .125W F TC=0+-100	24546	C4-1/8-T0-5111-F
A15R77	0698-3151	7		RESISTOR 2.87K 1% .125W F TC=0+-100	24546	C4-1/8-T0-2871-F
A15R78	0757-0278	9		RESISTOR 1.78K 1% .125W F TC=0+-100	24546	C4-1/8-T0-1781-F
A15R79	0698-3151	7		RESISTOR 2.87K 1% .125W F TC=0+-100	24546	C4-1/8-T0-2871-F
A15R80	0757-0446	3	1	RESISTOR 15K 1% .125W F TC=0+-100	24546	C4-1/8-T0-1502-F
A15R81	0757-0440	7	1	RESISTOR 7.5K 1% .125W F TC=0+-100	24546	C4-1/8-T0-7501-F
A15R82	0698-6360	6		RESISTOR 10K .1% .125W F TC=0+-25	28480	0698-6360
A15R83	0698-3279	0	2	RESISTOR 4.99K 1% .125W F TC=0+-100	24546	C4-1/8-T0-4991-F
A15R84	0698-6360	6		RESISTOR 10K .1% .125W F TC=0+-25	28480	0698-6360
A15R85	0757-0438	3		RESISTOR 5.11K 1% .125W F TC=0+-100	24546	C4-1/8-T0-5111-F
A15R86	0757-0438	3		RESISTOR 5.11K 1% .125W F TC=0+-100	24546	C4-1/8-T0-5111-F

See introduction to this section for ordering information
*Indicates factory selected value

Table 6-2. 4945A Replaceable Parts (Cont'd)

Reference Designation	HP Part Number	C D	Qty	Description	Mfr Code	Mfr Part Number
A15R87	0698-0085	0		RESISTOR 2.61K 1% .125W F TC=0+-100	24546	C4-1/8-T0-2611-F
A15R88	0698-3279	8		RESISTOR 4.99K 1% .125W F TC=0+-100	24546	C4-1/8-T0-4991-F
A15R89	0698-7842	1		RESISTOR 26.1K .1% .125W F TC=0+-25	19701	MF4C1/8-T9-2612-B
A15R90	0698-6360	6		RESISTOR 10K .1% .125W F TC=0+-25	28480	0698-6360
A15R91	0698-6360	6		RESISTOR 10K .1% .125W F TC=0+-25	28480	0698-6360
A15R92	0698-6360	6		RESISTOR 10K .1% .125W F TC=0+-25	28480	0698-6360
A15R93	0757-0394	0		RESISTOR 51.1 1% .125W F TC=0+-100	24546	C4-1/8-T0-51R1-F
A15R94	0757-0394	0		RESISTOR 51.1 1% .125W F TC=0+-100	24546	C4-1/8-T0-51R1-F
A15R95	0757-0394	0		RESISTOR 51.1 1% .125W F TC=0+-100	24546	C4-1/8-T0-51R1-F
A15R96	0757-0394	0		RESISTOR 51.1 1% .125W F TC=0+-100	24546	C4-1/8-T0-51R1-F
A15R97	0757-0394	0		RESISTOR 51.1 1% .125W F TC=0+-100	24546	C4-1/8-T0-51R1-F
A15R98	0699-0214	9	1	RESISTOR 17.8K .1% .125W F TC=0+-25	28480	0699-0214
A15R99	0757-0394	0		RESISTOR 51.1 1% .125W F TC=0+-100	24546	C4-1/8-T0-51R1-F
A15R100	0757-0280	3	1	RESISTOR 1K 1% .125W F TC=0+-100	24546	C4-1/8-T0-1001-F
A15R101	0757-0394	0		RESISTOR 51.1 1% .125W F TC=0+-100	24546	C4-1/8-T0-51R1-F
A15R102	0757-0394	0		RESISTOR 51.1 1% .125W F TC=0+-100	24546	C4-1/8-T0-51R1-F
A15R103	0698-6360	6		RESISTOR 10K .1% .125W F TC=0+-25	28480	0698-6360
A15R104	0757-0465	6	1	RESISTOR 100K 1% .125W F TC=0+-100	24546	C4-1/8-T0-1003-F
A15R105	2100-3123	0	3	RESISTOR-TRMR 500 10% C SIDE-ADJ 17-TRN	02111	43P501
A15R106	2100-3123	0		RESISTOR-TRMR 500 10% C SIDE-ADJ 17-TRN	02111	43P501
A15R107	2100-3123	0		RESISTOR-TRMR 500 10% C SIDE-ADJ 17-TRN	02111	43P501
A15R108	2100-3109	2	1	RESISTOR-TRMR 2K 10% C SIDE-ADJ 17-TRN	02111	43P202
A15TP1	1251-4670	2	3	CONNECTOR 3-PIN M POST TYPE	28480	1251-4670
A15TP2	1251-4670	2		CONNECTOR 3-PIN M POST TYPE	28480	1251-4670
A15TP3	1251-4670	2		CONNECTOR 3-PIN M POST TYPE	28480	1251-4670
A15TP4	1251-6857	1	1	CONNECTOR 2-PIN M POST TYPE	28480	1251-6857
A15TP6	0360-1682	0	1	TERMINAL-STUD SGL-TUR PRESS-MTG	28480	0360-1682
A15U101	1826-0735	1	3	IC OP AMP H-SLEW-RATE 8-DIP-P PKG	34371	HA3-2507-5
A15U102	1826-0753	3	1	IC OP AMP LOW-BIAS-H-IMPD QUAD 14-DIP-C	04713	MC34004BL
A15U104	1826-0410	9	3	IC OP AMP LOW-BIAS-H-IMPD QUAD 14-DIP-P	01295	TL084CN
A15U200	1826-1044	7	1	D/A 12-1/2-BIT 24-DIP-C BPLR	28480	1826-1044
A15U201	1826-0328	8	1	IC OP AMP GP DUAL 8-DIP-C PKG	07933	RV4558DE
A15U202	1826-0644	1	1	IC OP AMP H-SLEW-RATE TO-99 PKG	32293	HA2-2515-5
A15U203	1826-0735	1		IC OP AMP H-SLEW-RATE 8-DIP-P PKG	34371	HA3-2507-5
A15U204	1826-0188	8	1	IC CONV 8-B-D/A 16-DIP-C PKG	04713	MC1408L-8
A15U206	1826-0410	9		IC OP AMP LOW-BIAS-H-IMPD QUAD 14-DIP-P	01295	TL084CN
A15U300	1820-1730	6	3	IC FF TTL LS D-TYPE POS-EDGE-TRIG COM	01295	SN74LS273N
A15U301	1820-1470	1	2	IC MUXR/DATA-SEL TTL LS 2-TO-1-LINE QUAD	01295	SN74LS157N
A15U302	1820-1730	6		IC FF TTL LS D-TYPE POS-EDGE-TRIG COM	01295	SN74LS273N
A15U304	1826-0740	8	4	IC SWITCH ANLG DUAL 16-DIP-C PKG	32293	IH5043CDE
A15U305	1826-0081	0	1	IC OP AMP WB TO-99 PKG	27014	LM318H
A15U306	1826-0410	9		IC OP AMP LOW-BIAS-H-IMPD QUAD 14-DIP-P	01295	TL084CN
A15U400	1820-1112	8	2	IC FF TTL LS D-TYPE POS-EDGE-TRIG	01295	SN74LS74AN
A15U401	1820-1470	1		IC MUXR/DATA-SEL TTL LS 2-TO-1-LINE QUAD	01295	SN74LS157N
A15U402	04945-10019	8	1	WFG PROM 1	28480	04945-10019
A15U404	1826-0740	8		IC SWITCH ANLG DUAL 16-DIP-C PKG	32293	IH5043CDE
A15U405	1820-0493	6	1	IC OP AMP GP 8-DIP-P PKG	27014	LM307N
A15U500	1820-1217	4	1	IC MUXR/DATA-SEL TTL LS 8-TO-1-LINE	01295	SN74LS151N
A15U501	1820-1144	6	1	IC GATE TTL LS NOR QUAD 2-INP	01295	SN74LS02N
A15U502	04945-10020	1	1	WFG PROM 2	28480	04945-10020
A15U504	1820-1730	6		IC FF TTL LS D-TYPE POS-EDGE-TRIG COM	01295	SN74LS273N
A15U505	1826-0740	8		IC SWITCH ANLG DUAL 16-DIP-C PKG	32293	IH5043CDE
A15U506	1826-0861	4	1	IC CONV 10-B-D/A 16-DIP-P PKG	24355	AD7533LN
A15U600	1820-1197	9	2	IC GATE TTL LS NAND QUAD 2-INP	01295	SN74LS00N
A15U601	1820-1197	9		IC GATE TTL LS NAND QUAD 2-INP	01295	SN74LS00N
A15U602	1820-1858	9	1	IC FF TTL LS D-TYPE OCTL	01295	SN74LS377N
A15U604	1820-1112	8		IC FF TTL LS D-TYPE POS-EDGE-TRIG	01295	SN74LS74AN
A15U605	1826-0740	8		IC SWITCH ANLG DUAL 16-DIP-C PKG	32293	IH5043CDE
A15U606	1826-0735	1		IC OP AMP H-SLEW-RATE 8-DIP-P PKG	34371	HA3-2507-5
A15XU200	1200-0541	1	3	SOCKET-IC 24-CONT DIP DIP-SLDR	28480	1200-0541
A15XU402	1200-0541	1		SOCKET-IC 24-CONT DIP DIP-SLDR	28480	1200-0541
A15XU502	1200-0541	1		SOCKET-IC 24-CONT DIP DIP-SLDR	28480	1200-0541
	1480-0116	8	2	PIN-GRV .062-IN-DIA .25-IN-LG STL	28480	1480-0116
	4040-0747	2	2	EXTR-PC BD GRA POLYC .062-BD-THKNS	28480	4040-0747
	5080-8553	9	1	A15 ID LABEL	28480	5080-8553

See introduction to this section for ordering information
*Indicates factory selected value

Table 6-2. 4945A Replaceable Parts (Cont'd)

Reference Designation	HP Part Number	C D	Qty	Description	Mfr Code	Mfr Part Number
A17	04945-60017	1	1	ACTIVE OUTPUT BD	28480	04945-60017
A17C1	0180-2210	0	4	CAPACITOR-FXD 2UF+50-10% 150VDC AL	56289	30D205F150BB2
A17C2	0180-2210	0		CAPACITOR-FXD 2UF+50-10% 150VDC AL	56289	30D205F150BB2
A17C3	0180-2210	0		CAPACITOR-FXD 2UF+50-10% 150VDC AL	56289	30D205F150BB2
A17C4	0160-0127	2	3	CAPACITOR-FXD 1UF +-20% 25VDC CER	28480	0160-0127
A17C5	0180-0374	3	2	CAPACITOR-FXD 10UF+-10% 20VDC TA	56289	150D106X9020B2
A17C6	0160-5332	1	22	CAPACITOR-FXD .1UF +-20% 50VDC CER	28480	0160-5332
A17C7	0180-2210	0		CAPACITOR-FXD 2UF+50-10% 150VDC AL	56289	30D205F150BB2
A17C8	0160-0127	2		CAPACITOR-FXD 1UF +-20% 25VDC CER	28480	0160-0127
A17C9	0160-0127	2		CAPACITOR-FXD 1UF +-20% 25VDC CER	28480	0160-0127
A17C10	0160-5332	1		CAPACITOR-FXD .1UF +-20% 50VDC CER	28480	0160-5332
A17C11	0160-5332	1		CAPACITOR-FXD .1UF +-20% 50VDC CER	28480	0160-5332
A17C12	0160-5332	1		CAPACITOR-FXD .1UF +-20% 50VDC CER	28480	0160-5332
A17C13	0160-5332	1		CAPACITOR-FXD .1UF +-20% 50VDC CER	28480	0160-5332
A17C14	0180-2854	8	2	CAPACITOR-FXD 68UF+-10% 100VDC TA	28480	0180-2854
A17C15	0180-2854	8		CAPACITOR-FXD 68UF+-10% 100VDC TA	28480	0180-2854
A17C16	0180-3312	5	2	CAPACITOR-FXD 8.2UF -10+5% 150WVDC	28480	0180-3312
A17C17	0180-3312	5		CAPACITOR-FXD 8.2UF -10+5% 150WVDC	28480	0180-3312
A17C18	0160-5332	1		CAPACITOR-FXD .1UF +-20% 50VDC CER	28480	0160-5332
A17C19	0160-5332	1		CAPACITOR-FXD .1UF +-20% 50VDC CER	28480	0160-5332
A17C20	0160-5332	1		CAPACITOR-FXD .1UF +-20% 50VDC CER	28480	0160-5332
A17C21	0160-5332	1		CAPACITOR-FXD .1UF +-20% 50VDC CER	28480	0160-5332
A17C22	0160-5332	1		CAPACITOR-FXD .1UF +-20% 50VDC CER	28480	0160-5332
A17C23	0160-5332	1		CAPACITOR-FXD .1UF +-20% 50VDC CER	28480	0160-5332
A17C24	0160-5332	1		CAPACITOR-FXD .1UF +-20% 50VDC CER	28480	0160-5332
A17C25	0160-5332	1		CAPACITOR-FXD .1UF +-20% 50VDC CER	28480	0160-5332
A17C26	0160-5332	1		CAPACITOR-FXD .1UF +-20% 50VDC CER	28480	0160-5332
A17C27	0160-5332	1		CAPACITOR-FXD .1UF +-20% 50VDC CER	28480	0160-5332
A17C28	0160-5332	1		CAPACITOR-FXD .1UF +-20% 50VDC CER	28480	0160-5332
A17C29	0160-5332	1		CAPACITOR-FXD .1UF +-20% 50VDC CER	28480	0160-5332
A17C30	0160-5332	1		CAPACITOR-FXD .1UF +-20% 50VDC CER	28480	0160-5332
A17C31	0160-5332	1		CAPACITOR-FXD .1UF +-20% 50VDC CER	28480	0160-5332
A17C32	0180-0374	3		CAPACITOR-FXD 10UF+-10% 20VDC TA	56289	150D106X9020B2
A17C33	0160-5332	1		CAPACITOR-FXD .1UF +-20% 50VDC CER	28480	0160-5332
A17C34	0160-5332	1		CAPACITOR-FXD .1UF +-20% 50VDC CER	28480	0160-5332
A17C35	0160-0168	1	1	CAPACITOR-FXD .1UF +-10% 200VDC POLYE	28480	0160-0168
A17C36	0180-1819	3	1	CAPACITOR-FXD 100UF+75-10% 50VDC AL	56289	30D107G050DH2
A17C37	0180-1746	5	3	CAPACITOR-FXD 15UF+-10% 20VDC TA	56289	150D156X9020B2
A17C38	0180-1746	5		CAPACITOR-FXD 15UF+-10% 20VDC TA	56289	150D156X9020B2
A17C39	0180-1746	5		CAPACITOR-FXD 15UF+-10% 20VDC TA	56289	150D156X9020B2
A17C40	0160-5332	1		CAPACITOR-FXD .1UF +-20% 50VDC CER	28480	0160-5332
A17CR1	1826-0585	9	3	V REF TO-92	27014	LM329DZ
A17CR2	1826-0585	9		V REF TO-92	27014	LM329DZ
A17CR3	1826-0585	9		V REF TO-92	27014	LM329DZ
A17CR4	1901-1106	2	12	DIODE-POWER RECTIFIER	28480	1901-1106
A17CR5	1901-1106	2		DIODE-POWER RECTIFIER	28480	1901-1106
A17CR6	1902-0958	2	1	DIODE-ZNR 10V 5% DO-35 PD=.4W TC=+.075%	28480	1902-0958
A17CR7	1901-1106	2		DIODE-POWER RECTIFIER	28480	1901-1106
A17CR8	1901-1106	2		DIODE-POWER RECTIFIER	28480	1901-1106
A17CR9	1901-0033	2	1	DIODE-GEN PRP 180V 200MA DO-7	28480	1901-0033
A17CR10	1901-1106	2		DIODE-POWER RECTIFIER	28480	1901-1106
A17CR11	1901-1106	2		DIODE-POWER RECTIFIER	28480	1901-1106
A17CR12	1902-0969	5	1	DIODE-ZNR 30V 5% DO-35 PD=.4W TC=+.095%	28480	1902-0969
A17CR13	1901-1106	2		DIODE-POWER RECTIFIER	28480	1901-1106
A17CR14	1901-1106	2		DIODE-POWER RECTIFIER	28480	1901-1106
A17CR15	1901-0050	3	12	DIODE-SWITCHING 80V 200MA 2NS DO-35	28480	1901-0050
A17CR16	1901-0050	3		DIODE-SWITCHING 80V 200MA 2NS DO-35	28480	1901-0050
A17CR17	1901-0050	3		DIODE-SWITCHING 80V 200MA 2NS DO-35	28480	1901-0050
A17CR18	1901-0050	3		DIODE-SWITCHING 80V 200MA 2NS DO-35	28480	1901-0050
A17CR19	1901-0050	3		DIODE-SWITCHING 80V 200MA 2NS DO-35	28480	1901-0050
A17CR20	1901-0050	3		DIODE-SWITCHING 80V 200MA 2NS DO-35	28480	1901-0050
A17CR21	1902-0175	5	4	DIODE-ZNR 100V 5% PD=1W IR=5UA	28480	1902-0175
A17CR22	1902-0175	5		DIODE-ZNR 100V 5% PD=1W IR=5UA	28480	1902-0175
A17CR23	1902-0175	5		DIODE-ZNR 100V 5% PD=1W IR=5UA	28480	1902-0175
A17CR24	1902-0175	5		DIODE-ZNR 100V 5% PD=1W IR=5UA	28480	1902-0175
A17CR25	1901-1106	2		DIODE-POWER RECTIFIER	28480	1901-1106
A17CR26	1901-1106	2		DIODE-POWER RECTIFIER	28480	1901-1106
A17CR27	1901-0050	3		DIODE-SWITCHING 80V 200MA 2NS DO-35	28480	1901-0050
A17CR28	1901-0050	3		DIODE-SWITCHING 80V 200MA 2NS DO-35	28480	1901-0050
A17CR29	1901-1106	2		DIODE-POWER RECTIFIER	28480	1901-1106
A17CR30	1901-1106	2		DIODE-POWER RECTIFIER	28480	1901-1106

See introduction to this section for ordering information
*Indicates factory selected value

Table 6-2. 4945A Replaceable Parts (Cont'd)

Reference Designation	HP Part Number	C D	Qty	Description	Mfr Code	Mfr Part Number
A17CR31	1901-0050	3		DIODE-SWITCHING 80V 200MA 2NS DO-35	28480	1901-0050
A17CR32	1901-0050	3		DIODE-SWITCHING 80V 200MA 2NS DO-35	28480	1901-0050
A17CR33	1902-0943	5	4	DIODE-ZNR 2.4V 5% DO-35 PD=.4W TC=-.037%	28480	1902-0943
A17CR34	1902-0943	5		DIODE-ZNR 2.4V 5% DO-35 PD=.4W TC=-.037%	28480	1902-0943
A17CR35	1902-0943	5		DIODE-ZNR 2.4V 5% DO-35 PD=.4W TC=-.037%	28480	1902-0943
A17CR36	1902-0943	5		DIODE-ZNR 2.4V 5% DO-35 PD=.4W TC=-.037%	28480	1902-0943
A17CR37	1901-0050	3		DIODE-SWITCHING 80V 200MA 2NS DO-35	28480	1901-0050
A17CR38	1901-0050	3		DIODE-SWITCHING 80V 200MA 2NS DO-35	28480	1901-0050
A17P1	1251-7986	9	1	CONN-POST TYPE .100-PIN-SPCG 50-CONT	28480	1251-7986
A17Q1	1853-0221	7	3	TRANSISTOR PNP 2N5416 SI TO-5 PD=1W	3L585	2N5416
A17Q2	1854-0079	5	6	TRANSISTOR NPN 2N3439 SI TO-5 PD=1W	3L585	2N3439
A17Q3	1853-0462	8	1	TRANSISTOR PNP 2N3635 SI TO-39 PD=1W	01295	2N3635
A17Q4	1854-0079	5		TRANSISTOR NPN 2N3439 SI TO-5 PD=1W	3L585	2N3439
A17Q5	1854-0474	4	2	TRANSISTOR NPN SI PD=310MW FT=100MHZ	04713	2N5551
A17Q6	1853-0336	5	1	TRANSISTOR PNP SI PD=625MW FT=50MHZ	04713	MPSA92
A17Q7	1854-0474	4		TRANSISTOR NPN SI PD=310MW FT=100MHZ	04713	2N5551
A17Q8	1853-0459	3	1	TRANSISTOR PNP SI PD=625MW FT=200MHZ	28480	1853-0459
A17Q9	1854-0810	2	1	TRANSISTOR NPN SI PD=625MW FT=200MHZ	28480	1854-0810
A17Q10	1854-0079	5		TRANSISTOR NPN 2N3439 SI TO-5 PD=1W	3L585	2N3439
A17Q11	1854-0079	5		TRANSISTOR NPN 2N3439 SI TO-5 PD=1W	3L585	2N3439
A17Q12	1854-0079	5		TRANSISTOR NPN 2N3439 SI TO-5 PD=1W	3L585	2N3439
A17Q13	1853-0221	7		TRANSISTOR PNP 2N5416 SI TO-5 PD=1W	3L585	2N5416
A17Q14	1853-0221	7		TRANSISTOR PNP 2N5416 SI TO-5 PD=1W	3L585	2N5416
A17Q15	1854-0079	5		TRANSISTOR NPN 2N3439 SI TO-5 PD=1W	3L585	2N3439
A17Q16	1854-0477	7	2	TRANSISTOR NPN 2N2222A SI TO-18 PD=500MW	04713	2N2222A
A17Q17	1853-0281	9	2	TRANSISTOR PNP 2N2907A SI TO-18 PD=400MW	04713	2N2907A
A17Q18	1853-0281	9		TRANSISTOR PNP 2N2907A SI TO-18 PD=400MW	04713	2N2907A
A17Q19	1854-0477	7		TRANSISTOR NPN 2N2222A SI TO-18 PD=500MW	04713	2N2222A
A17R1	0757-0443	0	2	RESISTOR 11K 1% .125W F TC=0+-100	24546	C4-1/8-T0-1102-F
A17R2	0757-0443	0		RESISTOR 11K 1% .125W F TC=0+-100	24546	C4-1/8-T0-1102-F
A17R3	0698-4428	3	2	RESISTOR 1.69K 1% .125W F TC=0+-100	24546	C4-1/8-T0-1691-F
A17R4	0698-4428	3		RESISTOR 1.69K 1% .125W F TC=0+-100	24546	C4-1/8-T0-1691-F
A17R5	0757-0419	0	1	RESISTOR 681 1% .125W F TC=0+-100	24546	C4-1/8-T0-681R-F
A17R6	0757-0438	3	3	RESISTOR 5.11K 1% .125W F TC=0+-100	24546	C4-1/8-T0-5111-F
A17R7	0757-0438	3		RESISTOR 5.11K 1% .125W F TC=0+-100	24546	C4-1/8-T0-5111-F
A17R8	0698-6782	6	2	RESISTOR 250 .1% .125W F TC=0+-25	28480	0698-6782
A17R9	0698-4512	6	1	RESISTOR 88.7K 1% .125W F TC=0+-100	24546	C4-1/8-T0-8872-F
A17R10	0698-6413	0	4	RESISTOR 6.5K .1% .125W F TC=0+-25	28480	0698-6413
A17R11	0698-6360	6	8	RESISTOR 10K .1% .125W F TC=0+-25	28480	0698-6360
A17R12	0757-0180	2	6	RESISTOR 31.6 1% .125W F TC=0+-100	28480	0757-0180
A17R13	0698-3453	2	4	RESISTOR 196K 1% .125W F TC=0+-100	24546	C4-1/8-T0-1963-F
A17R14	0757-0465	6	7	RESISTOR 100K 1% .125W F TC=0+-100	24546	C4-1/8-T0-1003-F
A17R15	0698-8959	3	2	RESISTOR 619K 1% .125W F TC=0+-100	28480	0698-8959
A17R16	0698-8959	3		RESISTOR 619K 1% .125W F TC=0+-100	28480	0698-8959
A17R17	0698-3453	2		RESISTOR 196K 1% .125W F TC=0+-100	24546	C4-1/8-T0-1963-F
A17R18	0757-0470	3	1	RESISTOR 162K 1% .125W F TC=0+-100	24546	C4-1/8-T0-1623-F
A17R19	0698-3157	3	1	RESISTOR 19.6K 1% .125W F TC=0+-100	24546	C4-1/8-T0-1962-F
A17R20	0698-0084	9	1	RESISTOR 2.15K 1% .125W F TC=0+-100	24546	C4-1/8-T0-2151-F
A17R21	0757-0401	0	15	RESISTOR 100 1% .125W F TC=0+-100	24546	C4-1/8-T0-101-F
A17R22	0757-0401	0		RESISTOR 100 1% .125W F TC=0+-100	24546	C4-1/8-T0-101-F
A17R23	0698-6363	9	1	RESISTOR 40K .1% .125W F TC=0+-25	28480	0698-6363
A17R24	0698-3445	2	1	RESISTOR 348 1% .125W F TC=0+-100	24546	C4-1/8-T0-348R-F
A17R25	0698-3446	3	1	RESISTOR 383 1% .125W F TC=0+-100	24546	C4-1/8-T0-383R-F
A17R26	0757-0438	3		RESISTOR 5.11K 1% .125W F TC=0+-100	24546	C4-1/8-T0-5111-F
A17R27	0698-3453	2		RESISTOR 196K 1% .125W F TC=0+-100	24546	C4-1/8-T0-1963-F
A17R28	0698-6782	6		RESISTOR 250 .1% .125W F TC=0+-25	28480	0698-6782
A17R29	0698-6413	0		RESISTOR 6.5K .1% .125W F TC=0+-25	28480	0698-6413
A17R30	0698-6360	6		RESISTOR 10K .1% .125W F TC=0+-25	28480	0698-6360
A17R31	0757-0180	2		RESISTOR 31.6 1% .125W F TC=0+-100	28480	0757-0180
A17R32	0698-3453	2		RESISTOR 196K 1% .125W F TC=0+-100	24546	C4-1/8-T0-1963-F
A17R33	0757-0465	6		RESISTOR 100K 1% .125W F TC=0+-100	24546	C4-1/8-T0-1003-F
A17R34	0757-0420	3	2	RESISTOR 750 1% .125W F TC=0+-100	24546	C4-1/8-T0-751-F
A17R35	0757-0420	3		RESISTOR 750 1% .125W F TC=0+-100	24546	C4-1/8-T0-751-F
A17R36	0698-3450	9	1	RESISTOR 42.2K 1% .125W F TC=0+-100	24546	C4-1/8-T0-4222-F
A17R37	0757-0123	3	1	RESISTOR 34.8K 1% .125W F TC=0+-100	28480	0757-0123
A17R38	0757-0401	0		RESISTOR 100 1% .125W F TC=0+-100	24546	C4-1/8-T0-101-F
A17R39	0757-0401	0		RESISTOR 100 1% .125W F TC=0+-100	24546	C4-1/8-T0-101-F
A17R40	0757-0465	6		RESISTOR 100K 1% .125W F TC=0+-100	24546	C4-1/8-T0-1003-F
A17R41	0757-0465	6		RESISTOR 100K 1% .125W F TC=0+-100	24546	C4-1/8-T0-1003-F
A17R42	0757-0279	0	4	RESISTOR 3.16K 1% .125W F TC=0+-100	24546	C4-1/8-T0-3161-F
A17R43	0757-0279	0		RESISTOR 3.16K 1% .125W F TC=0+-100	24546	C4-1/8-T0-3161-F
A17R44	0757-0279	0		RESISTOR 3.16K 1% .125W F TC=0+-100	24546	C4-1/8-T0-3161-F
A17R45	0757-0279	0		RESISTOR 3.16K 1% .125W F TC=0+-100	24546	C4-1/8-T0-3161-F

See introduction to this section for ordering information
*Indicates factory selected value

Table 6-2. 4945A Replaceable Parts (Cont'd)

Reference Designation	HP Part Number	C D	Qty	Description	Mfr Code	Mfr Part Number
A17R46	0757-0465	6		RESISTOR 100K 1% .125W F TC=0+-100	24546	C4-1/8-T0-1003-F
A17R47	0757-0465	6		RESISTOR 100K 1% .125W F TC=0+-100	24546	C4-1/8-T0-1003-F
A17R48	0698-3457	6	1	RESISTOR 316K 1% .125W F TC=0+-100	28480	0698-3457
A17R49	0757-0486	1	1	RESISTOR 750K 1% .125W F TC=0+-100	28480	0757-0486
A17R50	0698-6348	0	2	RESISTOR 3K .1% .125W F TC=0+-25	28480	0698-6348
A17R51	0698-6348	0		RESISTOR 3K .1% .125W F TC=0+-25	28480	0698-6348
A17R52	0757-0401	0		RESISTOR 100 1% .125W F TC=0+-100	24546	C4-1/8-T0-101-F
A17R53	0757-0401	0		RESISTOR 100 1% .125W F TC=0+-100	24546	C4-1/8-T0-101-F
A17R54	0757-0401	0		RESISTOR 100 1% .125W F TC=0+-100	24546	C4-1/8-T0-101-F
A17R55	0757-0401	0		RESISTOR 100 1% .125W F TC=0+-100	24546	C4-1/8-T0-101-F
A17R56	0757-0401	0		RESISTOR 100 1% .125W F TC=0+-100	24546	C4-1/8-T0-101-F
A17R57	0757-0401	0		RESISTOR 100 1% .125W F TC=0+-100	24546	C4-1/8-T0-101-F
A17R58	0698-6360	6		RESISTOR 10K .1% .125W F TC=0+-25	28480	0698-6360
A17R59	0698-6360	6		RESISTOR 10K .1% .125W F TC=0+-25	28480	0698-6360
A17R60	0698-6360	6		RESISTOR 10K .1% .125W F TC=0+-25	28480	0698-6360
A17R61	0698-6360	6		RESISTOR 10K .1% .125W F TC=0+-25	28480	0698-6360
A17R62	0757-0465	6		RESISTOR 100K 1% .125W F TC=0+-100	24546	C4-1/8-T0-1003-F
A17R63	0757-0458	7	4	RESISTOR 51.1K 1% .125W F TC=0+-100	24546	C4-1/8-T0-5112-F
A17R64	0698-6413	0		RESISTOR 6.5K .1% .125W F TC=0+-25	28480	0698-6413
A17R65	0698-8638	5	2	RESISTOR 3.16K .1% .125W F TC=0+-25	28480	0698-8638
A17R66	0698-8638	5		RESISTOR 3.16K .1% .125W F TC=0+-25	28480	0698-8638
A17R67	0698-6413	0		RESISTOR 6.5K .1% .125W F TC=0+-25	28480	0698-6413
A17R68	0757-0458	7		RESISTOR 51.1K 1% .125W F TC=0+-100	24546	C4-1/8-T0-5112-F
A17R69	0698-6323	1	2	RESISTOR 100 .1% .125W F TC=0+-25	28480	0698-6323
A17R70	0698-6321	9	1	RESISTOR 9.9K .1% .125W F TC=0+-25	03888	PME55-1/8-T9-9901-D
A17R71	0757-0401	0		RESISTOR 100 1% .125W F TC=0+-100	24546	C4-1/8-T0-101-F
A17R72	0757-0401	0		RESISTOR 100 1% .125W F TC=0+-100	24546	C4-1/8-T0-101-F
A17R73	0757-0401	0		RESISTOR 100 1% .125W F TC=0+-100	24546	C4-1/8-T0-101-F
A17R74	0757-0280	3	1	RESISTOR 1K 1% .125W F TC=0+-100	24546	C4-1/8-T0-1001-F
A17R75	0757-0401	0		RESISTOR 100 1% .125W F TC=0+-100	24546	C4-1/8-T0-101-F
A17R76	0757-0401	0		RESISTOR 100 1% .125W F TC=0+-100	24546	C4-1/8-T0-101-F
A17R77	0698-6360	6		RESISTOR 10K .1% .125W F TC=0+-25	28480	0698-6360
A17R78	0698-6360	6		RESISTOR 10K .1% .125W F TC=0+-25	28480	0698-6360
A17R79	0698-6445	8	1	RESISTOR 6.836K .1% .125W F TC=0+-25	28480	0698-6445
A17R80	0698-6446	9	1	RESISTOR 2.162K .1% .125W F TC=0+-25	28480	0698-6446
A17R81	0698-6447	0	1	RESISTOR 683.8 .1% .125W F TC=0+-25	28480	0698-6447
A17R82	0698-6448	1	1	RESISTOR 216.2 .1% .125W F TC=0+-25	28480	0698-6448
A17R83	0698-6323	1		RESISTOR 100 .1% .125W F TC=0+-25	28480	0698-6323
A17R84	0757-0394	0	2	RESISTOR 51.1 1% .125W F TC=0+-100	24546	C4-1/8-T0-51R1-F
A17R85	0757-0394	0		RESISTOR 51.1 1% .125W F TC=0+-100	24546	C4-1/8-T0-51R1-F
A17R86	0757-0458	7		RESISTOR 51.1K 1% .125W F TC=0+-100	24546	C4-1/8-T0-5112-F
A17R87	0757-0180	2		RESISTOR 31.6 1% .125W F TC=0+-100	28480	0757-0180
A17R88	0757-0180	2		RESISTOR 31.6 1% .125W F TC=0+-100	28480	0757-0180
A17R89	0757-0180	2		RESISTOR 31.6 1% .125W F TC=0+-100	28480	0757-0180
A17R90	0757-0180	2		RESISTOR 31.6 1% .125W F TC=0+-100	28480	0757-0180
A17R91	0757-0458	7		RESISTOR 51.1K 1% .125W F TC=0+-100	24546	C4-1/8-T0-5112-F
A17U306	1826-0785	1	2	IC OP AMP LOW-BIAS-H-IMPD DUAL 8-DIP-C	01295	TL072ACJG
A17U307	1826-0915	9	5	IC OP AMP LOW-BIAS-H-IMPD 8 DIP-C PKG	01295	TL071ACJG (PER HP DWG)
A17U310	1826-0915	9		IC OP AMP LOW-BIAS-H-IMPD 8-DIP-C PKG	01295	TL071ACJG (PER HP DWG)
A17U405	1826-0915	9		IC OP AMP LOW-BIAS-H-IMPD 8-DIP-C PKG	01295	TL071ACJG (PER HP DWG)
A17U406	1826-0915	9		IC OP AMP LOW-BIAS-H-IMPD 8-DIP-C PKG	01295	TL071ACJG (PER HP DWG)
A17U407	1826-0915	9		IC OP AMP LOW-BIAS-H-IMPD 8-DIP-C PKG	01295	TL071ACJG (PER HP DWG)
A17U408	1826-0740	8	2	IC SWITCH ANLG DUAL 16-DIP-C PKG	32293	IH5043CDE
A17U409	1826-1725	9	1	IC MULTIPLXR ANLG 16-DIP-P PKG	17856	DG508CJ
A17U508	1826-0785	1		IC OP AMP LOW-BIAS-H-IMPD DUAL 8-DIP-C	01295	TL072ACJG
A17U607	1826-0740	8		IC SWITCH ANLG DUAL 16-DIP-C PKG	32293	IH5043CDE
A17U608	1826-1858	9	1	IC FF TTL LS D-TYPE OCTL	01295	SN74LS377N
	1200-0173	5	10	INSULATOR-XSTR DAP-GL	28480	1200-0173
	1205-0011	0	4	HEAT SINK TO-5/TO-39-CS	28480	1205-0011
	1480-0116	8	2	PIN-GRV .062-IN-DIA .25-IN-LG STL	28480	1480-0116
	4040-0747	2	2	EXTR-PC BD GRA POLYC .062-BD-THKNS	28480	4040-0747
	5080-8554	0	1	A17 ID LABEL	28480	5080-8554

See introduction to this section for ordering information
*Indicates factory selected value

Table 6-2. 4945A Replaceable Parts (Cont'd)

Reference Designation	HP Part Number	C D	Qty	Description	Mfr Code	Mfr Part Number
A18	04945-60018	2	1	TRANSMIT OUTPUT	28480	04945-60018
A18C1	0160-5675	5	1	CAPACITOR-FXD .47UF +-20% 50VDC	28480	0160-5675
A18C2	0160-5332	1	8	CAPACITOR-FXD .1UF +-20% 50VDC CER	28480	0160-5332
A18C3	0160-5332	1		CAPACITOR-FXD .1UF +-20% 50VDC CER	28480	0160-5332
A18C4	0180-0373	2	1	CAPACITOR-FXD .68UF+-10% 35VDC TA	56289	159D684X9035A2
A18C5	0160-5332	1		CAPACITOR-FXD .1UF +-20% 50VDC CER	28480	0160-5332
A18C6	0160-5881	5	1	CAPACITOR-FXD 2.16UF +-1% 200VDC	28480	0160-5881
A18C7	0180-3264	6	4	CAPACITOR-FXD 85UF+75-10% 150VDC AL NPOL	28480	0180-3264
A18C8	0180-3264	6		CAPACITOR-FXD 85UF+75-10% 150VDC AL NPOL	28480	0180-3264
A18C9	0180-3264	6		CAPACITOR-FXD 85UF+75-10% 150VDC AL NPOL	28480	0180-3264
A18C10	0180-3264	6		CAPACITOR-FXD 85UF+75-10% 150VDC AL NPOL	28480	0180-3264
A18C11	0160-5332	1		CAPACITOR-FXD .1UF +-20% 50VDC CER	28480	0160-5332
A18C12	0160-5332	1		CAPACITOR-FXD .1UF +-20% 50VDC CER	28480	0160-5332
A18C13	0160-5332	1		CAPACITOR-FXD .1UF +-20% 50VDC CER	28480	0160-5332
A18C14	0160-5332	1		CAPACITOR-FXD .1UF +-20% 50VDC CER	28480	0160-5332
A18C15	0180-1746	5	1	CAPACITOR-FXD 15UF+-10% 20VDC TA	56289	150D156X9020B2
A18C16	0160-5332	1		CAPACITOR-FXD .1UF +-20% 50VDC CER	28480	0160-5332
A18C17	0160-2307	4	1	CAPACITOR-FXD 47PF +-5% 300VDC MICA	28480	0160-2307
A18CR1	1906-0069	4	1	DIODE-FW BRDG 400V 1A	28480	1906-0069
A18CR2	1826-0585	9	1	V REF TO-92	27014	LM329DZ
A18CR3	1901-0040	1	20	DIODE-SWITCHING 30V 50MA 2NS DO-35	28480	1901-0040
A18CR4	1901-0040	1		DIODE-SWITCHING 30V 50MA 2NS DO-35	28480	1901-0040
A18CR5	1901-0040	1		DIODE-SWITCHING 30V 50MA 2NS DO-35	28480	1901-0040
A18CR6	1901-0040	1		DIODE-SWITCHING 30V 50MA 2NS DO-35	28480	1901-0040
A18CR7	1901-0040	1		DIODE-SWITCHING 30V 50MA 2NS DO-35	28480	1901-0040
A18CR8	1901-0040	1		DIODE-SWITCHING 30V 50MA 2NS DO-35	28480	1901-0040
A18CR9	1901-0040	1		DIODE-SWITCHING 30V 50MA 2NS DO-35	28480	1901-0040
A18CR10	1901-0040	1		DIODE-SWITCHING 30V 50MA 2NS DO-35	28480	1901-0040
A18CR11	1901-0040	1		DIODE-SWITCHING 30V 50MA 2NS DO-35	28480	1901-0040
A18CR12	1901-0040	1		DIODE-SWITCHING 30V 50MA 2NS DO-35	28480	1901-0040
A18CR13	1902-0586	2	4	DIODE-ZNR 150V 5% DO-15 PD=1W TC=+.087%	28480	1902-0586
A18CR14	1902-0586	2		DIODE-ZNR 150V 5% DO-15 PD=1W TC=+.087%	28480	1902-0586
A18CR15	1901-0040	1		DIODE-SWITCHING 30V 50MA 2NS DO-35	28480	1901-0040
A18CR16	1901-0040	1		DIODE-SWITCHING 30V 50MA 2NS DO-35	28480	1901-0040
A18CR17	1901-0040	1		DIODE-SWITCHING 30V 50MA 2NS DO-35	28480	1901-0040
A18CR18	1901-0040	1		DIODE-SWITCHING 30V 50MA 2NS DO-35	28480	1901-0040
A18CR19	1901-0040	1		DIODE-SWITCHING 30V 50MA 2NS DO-35	28480	1901-0040
A18CR20	1901-0040	1		DIODE-SWITCHING 30V 50MA 2NS DO-35	28480	1901-0040
A18CR21	1901-0040	1		DIODE-SWITCHING 30V 50MA 2NS DO-35	28480	1901-0040
A18CR22	1901-0040	1		DIODE-SWITCHING 30V 50MA 2NS DO-35	28480	1901-0040
A18CR23	1902-0586	2		DIODE-ZNR 150V 5% DO-15 PD=1W TC=+.087%	28480	1902-0586
A18CR24	1902-0586	2		DIODE-ZNR 150V 5% DO-15 PD=1W TC=+.087%	28480	1902-0586
A18CR25	1901-0040	1		DIODE-SWITCHING 30V 50MA 2NS DO-35	28480	1901-0040
A18CR26	1901-0040	1		DIODE-SWITCHING 30V 50MA 2NS DO-35	28480	1901-0040
A18J1	1251-2026	8	2	CONNECTOR-PC EDGE 18-CONT/ROW 2-ROWS	28480	1251-2026
A18J2	1251-2026	8		CONNECTOR-PC EDGE 18-CONT/ROW 2-ROWS	28480	1251-2026
A18K301	0490-1354	8	10	RELAY 2C 5VDC-COIL 2A 250VAC	28480	0490-1354
A18K302	0490-1354	8		RELAY 2C 5VDC-COIL 2A 250VAC	28480	0490-1354
A18K303	0490-1354	8		RELAY 2C 5VDC-COIL 2A 250VAC	28480	0490-1354
A18K304	0490-1354	8		RELAY 2C 5VDC-COIL 2A 250VAC	28480	0490-1354
A18K305	0490-1354	8		RELAY 2C 5VDC-COIL 2A 250VAC	28480	0490-1354
A18K306	0490-1354	8		RELAY 2C 5VDC-COIL 2A 250VAC	28480	0490-1354
A18K307	0490-1354	8		RELAY 2C 5VDC-COIL 2A 250VAC	28480	0490-1354
A18K308	0490-1354	8		RELAY 2C 5VDC-COIL 2A 250VAC	28480	0490-1354
A18K309	0490-1354	8		RELAY 2C 5VDC-COIL 2A 250VAC	28480	0490-1354
A18K310	0490-1354	8		RELAY 2C 5VDC-COIL 2A 250VAC	28480	0490-1354
A18P1	1251-7506	9	1	CONN-POST TYPE .100-PIN-SPCG 120-CONT	28480	1251-7506
A18Q1	1854-0575	6	1	TRANSISTOR NPN SI PD=625MW FT=50MHZ	04713	MPS-A42
A18Q2	1854-0071	7	1	TRANSISTOR NPN SI PD=300MW FT=200MHZ	28480	1854-0071
A18R1	0757-0382	6	1	RESISTOR 16.2 1% .125W F TC=0+-100	19701	MF4C1/8-T0-16R2-F
A18R3	0698-3453	2	1	RESISTOR 196K 1% .125W F TC=0+-100	24546	C4-1/8-T0-1963-F
A18R4	0698-8826	3	1	RESISTOR 825K 1% .125W F TC=0+-100	28480	0698-8826
A18R5	0698-3459	8	1	RESISTOR 383K 1% .125W F TC=0+-100	28480	0698-3459
A18R6	0757-0199	3	1	RESISTOR 21.5K 1% .125W F TC=0+-100	24546	C4-1/8-T0-2152-F
A18R7	0757-0401	0	2	RESISTOR 100 1% .125W F TC=0+-100	24546	C4-1/8-T0-101-F
A18R8	0757-0401	0		RESISTOR 100 1% .125W F TC=0+-100	24546	C4-1/8-T0-101-F
A18R9	0698-6344	6	1	RESISTOR 900 .1% .125W F TC=0+-25	28480	0698-6344
A18R10	0699-1197	9	1	RESISTOR-FXD 9000HM +-0.25% TC=0+-50 PPM	28480	0699-1197
A18R11	0699-1092	3	4	RESISTOR 600 .25% .5W F TC=0+-50	28480	0699-1092

See introduction to this section for ordering information
*Indicates factory selected value

Table 6-2. 4945A Replaceable Parts (Cont'd)

Reference Designation	HP Part Number	C D	Qty	Description	Mfr Code	Mfr Part Number
A10R12	0699-1091	2	2	RESISTOR 75.5 .25% .5W F TC=+-50	28480	0699-1091
A10R13	0699-1092	3		RESISTOR 600 .25% .5W F TC=0+-50	28480	0699-1092
A10R14	0699-1108	2	2	RESISTOR 1.8K .25% .5W F TC=+-50	28480	0699-1108
A10R15	0699-1092	3		RESISTOR 600 .25% .5W F TC=0+-50	28480	0699-1092
A10R16	0699-1091	2		RESISTOR 75.5 .25% .5W F TC=+-50	28480	0699-1091
A10R17	0699-1092	3		RESISTOR 600 .25% .5W F TC=0+-50	28480	0699-1092
A10R18	0699-1108	2		RESISTOR 1.8K .25% .5W F TC=+-50	28480	0699-1108
A10R19	0757-0394	0	3	RESISTOR 51.1 1% .125W F TC=0+-100	24546	C4-1/8-T0-51R1-F
A10R20	0757-0394	0		RESISTOR 51.1 1% .125W F TC=0+-100	24546	C4-1/8-T0-51R1-F
A10R21	0757-0394	0		RESISTOR 51.1 1% .125W F TC=0+-100	24546	C4-1/8-T0-51R1-F
A10R22	0698-6348	0	1	RESISTOR 3K .1% .125W F TC=0+-25	28480	0698-6348
A10R23	0698-4123	5	1	RESISTOR 499 1% .125W F TC=0+-100	24546	C4-1/8-T0-499R-F
A10R24	0698-8063	9	2	RESISTOR 1K .1% .5W F TC=0+-50	28480	0698-8063
A10R25	0698-8063	0		RESISTOR 1K .1% .5W F TC=0+-50	28480	0698-8063
A10R101	2100-3164	9	1	RESISTOR-TRMR 10 20% C SIDE-ADJ 17-TRN	02111	43P100
A10R301	1810-0279	5	4	NETWORK-RES 10-SIP4.7K OHM X 9	01121	210A472
A10R302	1810-0279	5		NETWORK-RES 10-SIP4.7K OHM X 9	01121	210A472
A10R303	1810-0279	5		NETWORK-RES 10-SIP4.7K OHM X 9	01121	210A472
A10R304	1810-0279	5		NETWORK-RES 10-SIP4.7K OHM X 9	01121	210A472
A10R401	1810-0349	0	4	NETWORK-RES 10-SIP1.0K OHM X 5	01121	210B102
A10R402	1810-0349	0		NETWORK-RES 10-SIP1.0K OHM X 5	01121	210B102
A10R403	1810-0349	0		NETWORK-RES 10-SIP1.0K OHM X 5	01121	210B102
A10R404	1810-0349	0		NETWORK-RES 10-SIP1.0K OHM X 5	01121	210B102
A10TP1	0360-1682	0	1	TERMINAL-STUD SGL-TUR PRESS-MTG	28480	0360-1682
A10U401	1854-0643	9	5	TRANSISTOR NPN 2N3585 SI TO-66 PD=35W	3L585	2N3585
A10U401	1858-0076	0	5	TRANSISTOR ARRAY 14-PIN PLSTC TO-116	04713	MPQ2907P
A10U402	1854-0643	9		TRANSISTOR NPN 2N3585 SI TO-66 PD=35W	3L585	2N3585
A10U402	1858-0076	0		TRANSISTOR ARRAY 14-PIN PLSTC TO-116	04713	MPQ2907P
A10U403	1854-0643	9		TRANSISTOR NPN 2N3585 SI TO-66 PD=35W	3L585	2N3585
A10U403	1858-0076	0		TRANSISTOR ARRAY 14-PIN PLSTC TO-116	04713	MPQ2907P
A10U404	1854-0643	9		TRANSISTOR NPN 2N3585 SI TO-66 PD=35W	3L585	2N3585
A10U404	1858-0076	0		TRANSISTOR ARRAY 14-PIN PLSTC TO-116	04713	MPQ2907P
A10U405	1854-0643	9		TRANSISTOR NPN 2N3585 SI TO-66 PD=35W	3L585	2N3585
A10U405	1858-0076	0		TRANSISTOR ARRAY 14-PIN PLSTC TO-116	04713	MPQ2907P
A10U501	1820-1216	3	3	IC DCDR TTL LS 3-TO-8-LINE 3-INP	01295	SN74LS138N
A10U502	1820-1216	3		IC DCDR TTL LS 3-TO-8-LINE 3-INP	01295	SN74LS138N
A10U503	1820-1216	3		IC DCDR TTL LS 3-TO-8-LINE 3-INP	01295	SN74LS138N
A10U504	1820-1858	9	1	IC FF TTL LS D-TYPE OCTL	01295	SN74LS377N
	0380-0342	9	3	STANDOFF-RVT-ON .125-IN-LG 6-32THD	00000	ORDER BY DESCRIPTION
	1205-0085	8	1	HEAT SINK TO-66-CS	28480	1205-0085
	1251-1115	4	2	POLARIZING KEY-PC EDGE CONN	28480	1251-1115
	1400-0249	0	1	CABLE TIE .062-.625-DIA .091-WD NYL	06383	PLT1M-8
	1480-0116	8	2	PIN-GRV .062-IN-DIA .25-IN-LG SIL	28480	1480-0116
	2360-0115	4	2	SCREW-MACH 6-32 .312-IN-LG PAN-HD-POZI	00000	ORDER BY DESCRIPTION
	2420-0023	1	2	NUT-HEX-W/LKWR 6-32-THD .109-IN-THK	28480	2420-0023
	6040-0239	9	1	LUBRICANT-GREASE SIL	05820	120
	5040-6067	2	2	EXTRACTOR PC	28480	5040-6067
	5080-8555	1	1	A10 ID LABEL	28480	5080-8555
	04945-20018	8	1	XMT OUTPUT BDBLK	28480	04945-20018
	04945-40010	2	1	INSULATOR-CAP	28480	04945-40010

See introduction to this section for ordering information
*Indicates factory selected value

Table 6-2. 4945A Replaceable Parts (Cont'd)

Reference Designation	HP Part Number	C D	Qty	Description	Mfr Code	Mfr Part Number
A19	04945-60019	3	1	CRT DRIVER BOARD	28480	04945-60019
A19C1	0160-5533	4	3	CAPACITOR-FXD .018UF +-1% 50VDC CER	28480	0160-5533
A19C2	0160-4822	2	2	CAPACITOR-FXD 1000PF +-5% 100VDC CER	28480	0160-4822
A19C3	0160-5298	8	4	CAPACITOR-FXD .01UF +-20% 100VDC CER	28480	0160-5298
A19C4	0180-1745	4	1	CAPACITOR-FXD 1.5UF+-10% 20VDC TA	56289	150D155X9020A2
A19C5	0160-5298	8		CAPACITOR-FXD .01UF +-20% 100VDC CER	28480	0160-5298
A19C5	0180-0097	7	5	CAPACITOR-FXD 47UF+-10% 35VDC TA	56289	150D476X9035S2
A19C6	0160-5298	8		CAPACITOR-FXD .01UF +-20% 100VDC CER	28480	0160-5298
A19C7	0160-5533	4		CAPACITOR-FXD .018UF +-1% 50VDC CER	28480	0160-5533
A19C8	0160-5332	1	1	CAPACITOR-FXD .1UF +-20% 50VDC CER	28480	0160-5332
A19C9	0160-0127	2	2	CAPACITOR-FXD 1UF +-20% 25VDC CER	28480	0160-0127
A19C10	0160-0161	4	2	CAPACITOR-FXD .01UF +-10% 200VDC POLYE	28480	0160-0161
A19C11	0160-4802	8	1	CAPACITOR-FXD 82PF +-5% 100VDC CER 0+-30	28480	0160-4802
A19C12	0160-2290	4	1	CAPACITOR-FXD .15UF +-10% 80VDC POLYE	28480	0160-2290
A19C13	0160-5657	3	2	CAPACITOR-FXD 1200PF +-1% 100VDC CER	28480	0160-5657
A19C14	0160-4822	2		CAPACITOR-FXD 1000PF +-5% 100VDC CER	28480	0160-4822
A19C15	0160-4449	9	1	CAPACITOR-FXD 6200PF +-10% 400VDC POLYE	28480	0160-4449
A19C16	0160-0161	4		CAPACITOR-FXD .01UF +-10% 200VDC POLYE	28480	0160-0161
A19C17	0160-0127	2		CAPACITOR-FXD 1UF +-20% 25VDC CER	28480	0160-0127
A19C18	0180-2692	2	3	CAPACITOR-FXD 68UF+-10% 15VDC TA	56289	150D686X9015R5
A19C19	0160-2204	0	1	CAPACITOR-FXD 130PF +-5% 300VDC MICA	28480	0160-2204
A19C20	0180-2692	2		CAPACITOR-FXD 68UF+-10% 15VDC TA	56289	150D686X9015R5
A19C21	0160-3508	9	3	CAPACITOR-FXD 1UF +80-20% 50VDC CER	28480	0160-3508
A19C22	0180-0098	8	1	CAPACITOR-FXD 100UF+-20% 20VDC TA	56289	150D107X0020S2
A19C23	0160-5298	8		CAPACITOR-FXD .01UF +-20% 100VDC CER	28480	0160-5298
A19C23	0180-0230	0	4	CAPACITOR-FXD 1UF+-20% 50VDC TA	56289	150D105X0050A2
A19C24	0160-3508	9		CAPACITOR-FXD 1UF +80-20% 50VDC CER	28480	0160-3508
A19C25	0180-0230	0		CAPACITOR-FXD 1UF+-20% 50VDC TA	56289	150D105X0050A2
A19C26	0160-3127	8	2	CAPACITOR-FXD .022UF +-5% 400VDC POLYE	84411	663UW2235402
A19C27	0180-2667	1	1	CAPACITOR-FXD 150UF+-10% 20VDC TA	56289	150D157X9020S2
A19C28	0180-0097	7		CAPACITOR-FXD 47UF+-10% 35VDC TA	56289	150D476X9035S2
A19C29	0160-4465	9	5	CAPACITOR-FXD .01UF +-20% 1KVDC CER	28480	0160-4465
A19C30	0160-4465	9		CAPACITOR-FXD .01UF +-20% 1KVDC CER	28480	0160-4465
A19C31	0180-1819	3	1	CAPACITOR-FXD 100UF+75-10% 50VDC AL	56289	30D107G050DH2
A19C32	0160-4465	9		CAPACITOR-FXD .01UF +-20% 1KVDC CER	28480	0160-4465
A19C32	0180-0230	0		CAPACITOR-FXD 1UF+-20% 50VDC TA	56289	150D105X0050A2
A19C33	0180-2829	7	1	CAPACITOR-FXD 5800UF+75-10% 7.5VDC AL	56289	604D582G7R5HP
A19C34	0180-0097	7		CAPACITOR-FXD 47UF+-10% 35VDC TA	56289	150D476X9035S2
A19C36	0160-4465	9		CAPACITOR-FXD .01UF +-20% 1KVDC CER	28480	0160-4465
A19C37	0160-4465	9		CAPACITOR-FXD .01UF +-20% 1KVDC CER	28480	0160-4465
A19C38	0160-3127	8		CAPACITOR-FXD .022UF +-5% 400VDC POLYE	84411	663UW2235402
A19C39	0160-3830	0	1	CAPACITOR-FXD 5UF +-10% 50VDC MET-POLYC	28480	0160-3830
A19C40	0160-3508	9		CAPACITOR-FXD 1UF +80-20% 50VDC CER	28480	0160-3508
A19C41	0180-1997	8	1	CAPACITOR-FXD 20UF+50-10% 150VDC AL	28480	0180-1997
A19C42	0160-4455	7	1	CAPACITOR-FXD 10UF +-10% 50VDC MET-POLYC	28480	0160-4455
A19C43	0180-0097	7		CAPACITOR-FXD 47UF+-10% 35VDC TA	56289	150D476X9035S2
A19C44	0180-0230	0		CAPACITOR-FXD 1UF+-20% 50VDC TA	56289	150D105X0050A2
A19C45	0160-2055	9	1	CAPACITOR-FXD .01UF +80-20% 100VDC CER	28480	0160-2055
A19C46	0180-2249	5	1	CAPACITOR-FXD 47UF+-10% 20VDC TA	56289	150D476X9020R2
A19C47	0160-5533	4		CAPACITOR-FXD .018UF +-1% 50VDC CER	28480	0160-5533
A19C48	0160-4811	9	1	CAPACITOR-FXD 270PF +-5% 100VDC CER	28480	0160-4811
A19C49	0180-2692	2		CAPACITOR-FXD 68UF+-10% 15VDC TA	56289	150D686X9015R5
A19C50	0180-0116	1	1	CAPACITOR-FXD 6.8UF+-10% 35VDC TA	56289	150D685X9035B2
A19C51	0180-0097	7		CAPACITOR-FXD 47UF+-10% 35VDC TA	56289	150D476X9035S2
A19C54	0160-5657	3		CAPACITOR-FXD 1200PF +-1% 100VDC CER	28480	0160-5657
A19C55	0160-3762	7	2	CAPACITOR-FXD .68UF +-5% 50VDC MET-POLYC	28480	0160-3762
A19C56	0160-3762	7		CAPACITOR-FXD .68UF +-5% 50VDC MET-POLYC	28480	0160-3762
A19C57	0160-4825	5	1	CAPACITOR-FXD 560PF +-5% 100VDC CER	28480	0160-4825
A19CR1	1901-1105	1	4	DIODE-HV RECTIFIER	28480	1901-1105
A19CR2	1901-1105	1		DIODE-HV RECTIFIER	28480	1901-1105
A19CR3	1901-0767	9	3	DIODE-PWR RECT 400V 6A	04713	MR754
A19CR4	1901-1105	1		DIODE-HV RECTIFIER	28480	1901-1105
A19CR5	1901-0050	3	1	DIODE-SWITCHING 80V 200MA 2NS DO-35	28480	1901-0050
A19CR6	1901-1105	1		DIODE-HV RECTIFIER	28480	1901-1105
A19CR7	1901-0767	9		DIODE-PWR RECT 400V 6A	04713	MR754
A19CR8	1901-0767	9		DIODE-PWR RECT 400V 6A	04713	MR754
A19CR9	1902-3323	1	1	DIODE-ZNR 42.2V 5% DO-35 PD=.4W TC=+.08%	28480	1902-3323
A19CR10	1901-0040	1	1	DIODE-SWITCHING 30V 50MA 2NS DO-35	28480	1901-0040
A19H1	0380-0111	9	1	STANDOFF-RVT-BN .25-IN-LG 6-32THD	00000	ORDER BY DESCRIPTION
A19H2	0380-0159	6	1	STANDOFF-RVT-BN .375-IN-LG 6-32THD	00000	ORDER BY DESCRIPTION
A19H3	2360-0115	4	1	SCREW-MACH 6-32 .312-IN-LG PAN-HD-POZI	00000	ORDER BY DESCRIPTION

See introduction to this section for ordering information
*Indicates factory selected value

Table 6-2. 4945A Replaceable Parts (Cont'd)

Reference Designation	HP Part Number	C D	Qty	Description	Mfr Code	Mfr Part Number
A19J1	1251-7967	6	1	CONN-POST TYPE .100-PIN-SPCG 7-CONT	28480	1251-7967
A19J2	1251-3825	7	2	CONNECTOR 5-PIN M POST TYPE	28480	1251-3825
A19J3	1251-3825	7		CONNECTOR 5-PIN M POST TYPE	28480	1251-3825
A19J4	1251-4882	8	1	CONNECTOR 7-PIN M POST TYPE	28480	1251-4882
A19J5	1251-6857	1	4	CONNECTOR 2-PIN M POST TYPE	28480	1251-6857
A19J6	1251-6857	1		CONNECTOR 2-PIN M POST TYPE	28480	1251-6857
A19J7	1251-6857	1		CONNECTOR 2-PIN M POST TYPE	28480	1251-6857
A19J8	1251-6857	1		CONNECTOR 2-PIN M POST TYPE	28480	1251-6857
A19JU1	1258-0141	8	4	JUMPER-REM	28480	1258-0141
A19JU2	1258-0141	8		JUMPER-REM	28480	1258-0141
A19JU3	1258-0141	8		JUMPER-REM	28480	1258-0141
A19JU4	1258-0141	8		JUMPER-REM	28480	1258-0141
A19L1	9140-0765	1	1	INDUCTOR 700UH 10% 1.06WX1.02LG	28480	9140-0765
A19L2	9140-0111	1	1	INDUCTOR RF-CH-MLD 3.3UH 10%	28480	9140-0111
A19L3	01611-86001	8	1	COIL FXD .6UH	28480	01611-86001
A19L4	9140-0764	0	1	INDUCTOR 2.5MH 10% 1.06WX1.02LG	28480	9140-0764
A19L5	9140-0825	4	1	INDUCTOR RF-CH-MLD 235MH	28480	9140-0825
A19MP1	3131-0471	1	1	BOOT RUBBER SW	28480	3131-0471
A19MP2	0470-0354	4	1	ADHESIVE DOW CORNING 732 RTV SIL-RBR-RTV	28480	0470-0354
A19MP3	04945-00027	7	1	FLYBACK SHIELD	28480	04945-00027
A19MP4	0890-0025	6	1	SPIRAL WRAP .188-2-DIA POLYETH	28480	0890-0025
A19MP5	1400-1219	6	1	MOUNT-CA TIE .5-.6-DIA NYL	28480	1400-1219
A19MP6	0510-1210	9	2	NUT-SHMET-U-TP 8-32-THD .02-IN-THK	28480	0510-1210
A19MP7	0510-1210	9		NUT-SHMET-U-TP 8-32-THD .02-IN-THK	28480	0510-1210
A19Q1	1854-0624	6	3	TRANSISTOR NPN 2N6308 SI TO-3 PD=125W	04713	2N6308
A19Q2	1854-0215	1	5	TRANSISTOR NPN SI PD=350MW FT=300MHZ	04713	2N3904
A19Q3	1854-0215	1		TRANSISTOR NPN SI PD=350MW FT=300MHZ	04713	2N3904
A19Q4	1854-0215	1		TRANSISTOR NPN SI PD=350MW FT=300MHZ	04713	2N3904
A19Q5	1853-0036	2	2	TRANSISTOR PNP SI PD=310MW FT=250MHZ	28480	1853-0036
A19Q6	1853-0334	3	1	TRANSISTOR PNP SI DARL PD=70W FT=1MHZ	04713	MJE1090
A19Q7	1854-0558	5	1	TRANSISTOR NPN SI DARL PD=70W FT=1MHZ	28480	1854-0558
A19Q8	1854-0624	6		TRANSISTOR NPN 2N6308 SI TO-3 PD=125W	04713	2N6308
A19Q9	1854-0624	6		TRANSISTOR NPN 2N6308 SI TO-3 PD=125W	04713	2N6308
A19Q10	1854-0215	1		TRANSISTOR NPN SI PD=350MW FT=300MHZ	04713	2N3904
A19Q11	1853-0036	2		TRANSISTOR PNP SI PD=310MW FT=250MHZ	28480	1853-0036
A19Q12	1854-0330	1	1	TRANSISTOR NPN SI PD=21W FT=10MHZ	28480	1854-0330
A19Q13	1854-0215	1		TRANSISTOR NPN SI PD=350MW FT=300MHZ	04713	2N3904
A19R1	0698-3460	1	2	RESISTOR 422K 1% .125W F TC=0+-100	28480	0698-3460
A19R2	0698-3460	1		RESISTOR 422K 1% .125W F TC=0+-100	28480	0698-3460
A19R3	0757-0317	7	2	RESISTOR 1.33K 1% .125W F TC=0+-100	24546	C4-1/8-T0-1331-F
A19R4	0757-0317	7		RESISTOR 1.33K 1% .125W F TC=0+-100	24546	C4-1/8-T0-1331-F
A19R5	0757-0438	3	2	RESISTOR 5.11K 1% .125W F TC=0+-100	24546	C4-1/8-T0-5111-F
A19R6	0698-8850	3	1	RESISTOR 41.9K .1% .125W F TC=0+-25	28480	0698-8850
A19R7	0698-3456	5	1	RESISTOR 287K 1% .125W F TC=0+-100	24546	C4-1/8-T0-2873-F
A19R8	0757-0421	4	1	RESISTOR 825 1% .125W F TC=0+-100	24546	C4-1/8-T0-825R-F
A19R9	0757-0442	9	1	RESISTOR 10K 1% .125W F TC=0+-100	24546	C4-1/8-T0-1002-F
A19R10	0757-0280	3	5	RESISTOR 1K 1% .125W F TC=0+-100	24546	C4-1/8-T0-1001-F
A19R11	0698-8827	4	1	RESISTOR 1M 1% .125W F TC=0+-100	28480	0698-8827
A19R12	0698-3455	4	1	RESISTOR 261K 1% .125W F TC=0+-100	24546	C4-1/8-T0-2613-F
A19R13	0698-3601	2	2	RESISTOR 10 5% 2W MO TC=0+-200	27167	FP42-2-T00-10R0-J
A19R14	0757-0401	3	4	RESISTOR 100 1% .125W F TC=0+-100	24546	C4-1/8-T0-101-F
A19R15	0757-0284	7	1	RESISTOR 150 1% .125W F TC=0+-100	24546	C4-1/8-T0-151-F
A19R16	0757-0457	6	9	RESISTOR 47.5K 1% .125W F TC=0+-100	24546	C4-1/8-T0-4752-F
A19R17	0757-0412	3	1	RESISTOR 365 1% .125W F TC=0+-100	24546	C4-1/8-T0-365R-F
A19R18	0757-0401	3		RESISTOR 100 1% .125W F TC=0+-100	24546	C4-1/8-T0-101-F
A19R19	0757-0280	3		RESISTOR 1K 1% .125W F TC=0+-100	24546	C4-1/8-T0-1001-F
A19R20	2100-3964	7	1	RESISTOR-VAR CONTROL C 50 10% LIN	28480	2100-3964
A19R21	0757-0457	6		RESISTOR 47.5K 1% .125W F TC=0+-100	24546	C4-1/8-T0-4752-F
A19R22	0757-0457	6		RESISTOR 47.5K 1% .125W F TC=0+-100	24546	C4-1/8-T0-4752-F
A19R23	0757-0457	6		RESISTOR 47.5K 1% .125W F TC=0+-100	24546	C4-1/8-T0-4752-F
A19R24	0757-0283	6	4	RESISTOR 2K 1% .125W F TC=0+-100	24546	C4-1/8-T0-2001-F
A19R25	0757-0457	6		RESISTOR 47.5K 1% .125W F TC=0+-100	24546	C4-1/8-T0-4752-F
A19R26	0757-0283	6		RESISTOR 2K 1% .125W F TC=0+-100	24546	C4-1/8-T0-2001-F
A19R27	2100-3965	8	3	RESISTOR-TRMR 5K 10% C TOP-ADJ 1-TRN	28480	2100-3965
A19R28	0757-0283	6		RESISTOR 2K 1% .125W F TC=0+-100	24546	C4-1/8-T0-2001-F
A19R29	0757-0159	5	2	RESISTOR 1K 1% .5W F TC=0+-100	28480	0757-0159
A19R30	2100-3908	9	1	RESISTOR-TRMR 1M 10% CC TOP-ADJ 1-TRN	28480	2100-3908
A19R31	0757-0394	0	3	RESISTOR 51.1 1% .125W F TC=0+-100	24546	C4-1/8-T0-51R1-F
A19R32	0686-3035	1	1	RESISTOR 30K 5% .5W CC TC=0+765	01121	EB3035
A19R32	0757-0394	0		RESISTOR 51.1 1% .125W F TC=0+-100	24546	C4-1/8-T0-51R1-F
A19R33	0686-1015	3	1	RESISTOR 100 5% .5W CC TC=0+529	01121	EB1015
A19R34	0757-0469	0	1	RESISTOR 150k 1% .125W F TC=0+-100	24546	C4-1/8-T0-1503-F
A19R36	0698-3605	6	1	RESISTOR 15 5% 2W MO TC=0+-200	27167	FP42-2-T00-15R0-J
A19R37	0757-0280	3		RESISTOR 1K 1% .125W F TC=0+-100	24546	C4-1/8-T0-1001-F
A19R38	0757-0280	3		RESISTOR 1K 1% .125W F TC=0+-100	24546	C4-1/8-T0-1001-F
A19R39	0757-0280	3		RESISTOR 1K 1% .125W F TC=0+-100	24546	C4-1/8-T0-1001-F
A19R40	0757-0457	6		RESISTOR 47.5K 1% .125W F TC=0+-100	24546	C4-1/8-T0-4752-F

See introduction to this section for ordering information
*Indicates factory selected value

Table 6-2. 4945A Replaceable Parts (Cont'd)

Reference Designation	HP Part Number	C D	Qty	Description	Mfr Code	Mfr Part Number
A19R41	0686-9145	6	2	RESISTOR 910K 5% .5W CC TC=0+882	01121	EB9145
A19R42	0686-9145	6		RESISTOR 910K 5% .5W CC TC=0+882	01121	EB9145
A19R43	2100-3966	9	2	RESISTOR-TRMR 200K 10% C TOP-ADJ 1-TRN	28480	2100-3966
A19R44	0692-6805	2	1	RESISTOR 68 5% 2W CC TC=0+412	01121	HB6805
A19R45	0698-0090	7	1	RESISTOR 464 1% .5W F TC=0+-100	28480	0698-0090
A19R46	0757-0159	5		RESISTOR 1K 1% .5W F TC=0+-100	28480	0757-0159
A19R47	0757-0804	7	1	RESISTOR 200 1% .5W F TC=0+-100	28480	0757-0804
A19R48	2100-3965	8		RESISTOR-TRMR 5K 10% C TOP-ADJ 1-TRN	28480	2100-3965
A19R49	0757-0457	6		RESISTOR 47.5K 1% .125W F TC=0+-100	24546	C4-1/8-T0-4752-F
A19R50	0757-0457	6		RESISTOR 47.5K 1% .125W F TC=0+-100	24546	C4-1/8-T0-4752-F
A19R51	0686-1045	9	2	RESISTOR 100K 5% .5W CC TC=0+882	01121	EB1045
A19R52	0686-1045	9		RESISTOR 100K 5% .5W CC TC=0+882	01121	EB1045
A19R54	0757-0401	0		RESISTOR 100 1% .125W F TC=0+-100	24546	C4-1/8-T0-101-F
A19R55	0757-0401	0		RESISTOR 100 1% .125W F TC=0+-100	24546	C4-1/8-T0-101-F
A19R56	0757-0407	6	1	RESISTOR 200 1% .125W F TC=0+-100	24546	C4-1/8-T0-201-F
A19R57	0698-5437	6	2	RESISTOR 12K .1% .125W F TC=0+-50	28480	0698-5437
A19R58	0698-5420	7	2	RESISTOR 3.874K .1% .125W F TC=0+-50	28480	0698-5420
A19R59	0698-5420	7		RESISTOR 3.874K .1% .125W F TC=0+-50	28480	0698-5420
A19R60	0757-0457	6		RESISTOR 47.5K 1% .125W F TC=0+-100	24546	C4-1/8-T0-4752-F
A19R61	0698-5437	6		RESISTOR 12K .1% .125W F TC=0+-50	28480	0698-5437
A19R62	0698-3155	1	2	RESISTOR 4.64K 1% .125W F TC=0+-100	24546	C4-1/8-T0-4641-F
A19R63	0698-3499	6	1	RESISTOR 40.2K 1% .125W F TC=0+-100	24546	C4-1/8-T0-4022-F
A19R64	0757-0439	4	2	RESISTOR 6.81K 1% .125W F TC=0+-100	24546	C4-1/8-T0-6811-F
A19R65	0698-3155	1		RESISTOR 4.64K 1% .125W F TC=0+-100	24546	C4-1/8-T0-4641-F
A19R66	0757-0439	4		RESISTOR 6.81K 1% .125W F TC=0+-100	24546	C4-1/8-T0-6811-F
A19R67	0698-3601	2		RESISTOR 10 5% 2W MO TC=0+-200	27167	FP42-2-T00-10R0-J
A19R68	0811-1671	4	1	RESISTOR 2.7 5% 2W PW TC=0+-400	75042	BWH2-2R7-J
A19R69	2100-3965	8		RESISTOR-TRMR 5K 10% C TOP-ADJ 1-TRN	28480	2100-3965
A19R70	2100-3966	9		RESISTOR-TRMR 200K 10% C TOP-ADJ 1-TRN	28480	2100-3966
A19R71	0757-0200	7	1	RESISTOR 5.62K 1% .125W F TC=0+-100	24546	C4-1/8-T0-5621-F
A19R72	0757-0283	6		RESISTOR 2K 1% .125W F TC=0+-100	24546	C4-1/8-T0-2001-F
A19R73	0757-0470	3	2	RESISTOR 162K 1% .125W F TC=0+-100	24546	C4-1/8-T0-1623-F
A19R74	0757-0437	2	2	RESISTOR 4.75K 1% .125W F TC=0+-100	24546	C4-1/8-T0-4751-F
A19R75	0757-0394	0		RESISTOR 51.1 1% .125W F TC=0+-100	24546	C4-1/8-T0-51R1-F
A19R76	0757-0470	3		RESISTOR 162K 1% .125W F TC=0+-100	24546	C4-1/8-T0-1623-F
A19R77	0757-0453	2	1	RESISTOR 30.1K 1% .125W F TC=0+-100	24546	C4-1/8-T0-3012-F
A19R78	0757-0438	3		RESISTOR 5.11K 1% .125W F TC=0+-100	24546	C4-1/8-T0-5111-F
A19R79	0757-0437	2		RESISTOR 4.75K 1% .125W F TC=0+-100	24546	C4-1/8-T0-4751-F
A19R80	0757-0488	3	1	RESISTOR 909K 1% .125W F TC=0+-100	28480	0757-0488
A19S100	3101-2617	8	1	SWITCH-TGL SUBMIN 4PDT .02A 20VAC/DC PC	28480	3101-2617
A19T1	9100-2696	7	1	TRANSFORMER-FLYBACK PRI IND: 560UH; SEC	28480	9100-2696
A19T2	5061-1228	1	1	XFMR PULSE	28480	5061-1228
A19TP100	0360-0535	0	16	TERMINAL TEST POINT PCB	00000	ORDER BY DESCRIPTION
A19TP101	0360-0535	0		TERMINAL TEST POINT PCB	00000	ORDER BY DESCRIPTION
A19TP104	0360-0535	0		TERMINAL TEST POINT PCB	00000	ORDER BY DESCRIPTION
A19TP105	0360-0535	0		TERMINAL TEST POINT PCB	00000	ORDER BY DESCRIPTION
A19TP106	0360-0535	0		TERMINAL TEST POINT PCB	00000	ORDER BY DESCRIPTION
A19TP107	0360-0535	0		TERMINAL TEST POINT PCB	00000	ORDER BY DESCRIPTION
A19TP202	0360-0535	0		TERMINAL TEST POINT PCB	00000	ORDER BY DESCRIPTION
A19TP204	0360-0535	0		TERMINAL TEST POINT PCB	00000	ORDER BY DESCRIPTION
A19TP205	0360-0535	0		TERMINAL TEST POINT PCB	00000	ORDER BY DESCRIPTION
A19TP206	0360-0535	0		TERMINAL TEST POINT PCB	00000	ORDER BY DESCRIPTION
A19TP300	0360-0535	0		TERMINAL TEST POINT PCB	00000	ORDER BY DESCRIPTION
A19TP500	0360-0535	0		TERMINAL TEST POINT PCB	00000	ORDER BY DESCRIPTION
A19TP501	0360-0535	0		TERMINAL TEST POINT PCB	00000	ORDER BY DESCRIPTION
A19TP502	0360-0535	0		TERMINAL TEST POINT PCB	00000	ORDER BY DESCRIPTION
A19TP503	0360-0535	0		TERMINAL TEST POINT PCB	00000	ORDER BY DESCRIPTION
A19TP508	0360-0535	0		TERMINAL TEST POINT PCB	00000	ORDER BY DESCRIPTION
A19U102	1826-0205	0	1	IC TIMER TTL	18324	NE556A
A19U104	1826-1002	7	1	IC PL LOOP 14-DIP-P PKG	28480	1826-1002
A19U206	1826-0254	9	4	IC OP AMP H-SLEW-RATE 8-DIP-P PKG	04713	MC1741SCP1
A19U408	1826-0254	9		IC OP AMP H-SLEW-RATE 8-DIP-P PKG	04713	MC1741SCP1
A19U508	1826-0254	9		IC OP AMP H-SLEW-RATE 8-DIP-P PKG	04713	MC1741SCP1
A19U600	1820-1437	0	1	IC MV TTL LS MONOSTBL DUAL	01295	SN74LS221N
A19U602	1820-1796	4	1	IC DRVR TTL DUAL 2-INP	27014	DS3611N
A19U608	1826-0254	9		IC OP AMP H-SLEW-RATE 8-DIP-P PKG	04713	MC1741SCP1
A19V1	1970-0072	4	3	TUBE-ELECTRON SURGE V PTCTR	28480	1970-0072
A19V2	1970-0072	4		TUBE-ELECTRON SURGE V PTCTR	28480	1970-0072
A19V3	1970-0072	4		TUBE-ELECTRON SURGE V PTCTR	28480	1970-0072
A19V3	2140-0013	5	2	LAMP-GLOW 5AB-A 70/57VDC 300UA T-2-BULB	08806	5AB-A(NE-23A)
A19V4	2140-0013	5		LAMP-GLOW 5AB-A 70/57VDC 300UA T-2-BULB	08806	5AB-A(NE-23A)

See introduction to this section for ordering information
*Indicates factory selected value

Table 6-2. 4945A Replaceable Parts (Cont'd)

Reference Designation	HP Part Number	C D	Qty	Description	Mfr Code	Mfr Part Number
A20	04945-60020	6	1	AC MAIN SWITCH	28480	04945-60020
A20C1	0180-2466	8	4	CAPACITOR-FXD 50UF+75-10% 50VDC AL	56289	30D506G050DD5
A20C2	0180-2466	8		CAPACITOR-FXD 50UF+75-10% 50VDC AL	56289	30D506G050DD5
A20C3	0180-2466	8		CAPACITOR-FXD 50UF+75-10% 50VDC AL	56289	30D506G050DD5
A20C4	0180-2466	8		CAPACITOR-FXD 50UF+75-10% 50VDC AL	56289	30D506G050DD5
A20H1	2190-0019	6	1	WASHER-LK HLCL NO. 4 .115-IN-ID	28480	2190-0019
A20H2	2200-0147	4	1	SCREW-MACH 4-40 .5-IN-LG PAN-HD-POZI	28480	2200-0147
A20H3	2260-0002	6	1	NUT-HEX-DBL-CHAM 4-40-THD .062-IN-THK	28480	2260-0002
A20H4	0380-0342	9	1	STANDOFF-RVT-ON .125-IN-LG 6-32THD	00000	ORDER BY DESCRIPTION
A20J1	1251-7971	2	1	CONNECTOR-PC EDGE 11-CONT/ROW 2-ROWS	28480	1251-7971
A20J2	1251-8310	5	1	CONNECTOR 6-PIN F FLAT CABLE	28480	1251-8310
A20J3	1251-4670	2	2	CONNECTOR POST-3 PIN	28480	1251-4670
A20J4	1251-4670	2	2	CONNECTOR POST-3 PIN	28480	1251-4670
A20L1	9140-0836	7	4	INDUCTOR-FXD 10UH +-10%	28480	9140-0836
A20L2	9140-0836	7		INDUCTOR-FXD 10UH +-10%	28480	9140-0836
A20L3	9140-0836	7		INDUCTOR-FXD 10UH +-10%	28480	9140-0836
A20L4	9140-0836	7		INDUCTOR-FXD 10UH +-10%	28480	9140-0836
A20MP3	1400-0249	0	2	CABLE TIE .062-.625-DIA .091-WD NYL	06383	PLT1M-8
A20MP4	1400-0249	0		CABLE TIE .062-.625-DIA .091-WD NYL	06383	PLT1M-8
A20SW1	3101-0680	1	1	SWITCH-PB DPDT ALTNG 4A 250VAC	28480	3101-0680
A20W1	5060-7127	9	1	WHT-BLK/WHT-RED	28480	5060-7127
A20W2	04945-61610	2	1	A21 AC CABLE	28480	04945-61610
A20W3	04945-61611	3	1	A19 DC CABLE	28480	04945-61611
A20W4	04945-61612	4	1	FAN DC CABLE	28480	04945-61612

See introduction to this section for ordering information
*Indicates factory selected value

Table 6-2. 4945A Replaceable Parts (Cont'd)

Reference Designation	HP Part Number	C D	Qty	Description	Mfr Code	Mfr Part Number
A21	04945-60021	7	1	DC CONNECTOR BOARD	28480	04945-60021
A21C1	0160-4663	9	2	CAPACITOR-FXD 2.2UF +80-20% 100VDC CER	28480	0160-4663
A21C2	0160-4663	9		CAPACITOR-FXD 2.2UF +80-20% 100VDC CER	28480	0160-4663
A21C3	0160-0303	6	2	CAPACITOR-FXD .15UF +-10% 200VDC POLYE	28480	0160-0303
A21C4	0160-0303	6		CAPACITOR-FXD .15UF +-10% 200VDC POLYE	28480	0160-0303
A21C5	0180-2815	1	2	CAPACITOR-FXD 100UF+-20% 10VDC TA	28480	0180-2815
A21C6	0180-2815	1		CAPACITOR-FXD 100UF+-20% 10VDC TA	28480	0180-2815
A21C7	0180-0291	3	2	CAPACITOR-FXD 1UF+-10% 35VDC TA	56289	150D105X9035A2
A21C8	0180-0291	3		CAPACITOR-FXD 1UF+-10% 35VDC TA	56289	150D105X9035A2
A21CR1	1901-0871	6	6	DIODE-PWR RECT 150V 2.5A 25NS	12969	UES1103
A21CR2	1901-0871	6		DIODE-PWR RECT 150V 2.5A 25NS	12969	UES1103
A21CR3	1901-0871	6		DIODE-PWR RECT 150V 2.5A 25NS	12969	UES1103
A21CR4	1901-0871	6		DIODE-PWR RECT 150V 2.5A 25NS	12969	UES1103
A21CR5	1901-1115	3	4	POWER RECTIFIER	28480	1901-1115
A21CR6	1901-1115	3		POWER RECTIFIER	28480	1901-1115
A21CR7	1901-1115	3		POWER RECTIFIER	28480	1901-1115
A21CR8	1901-1115	3		POWER RECTIFIER	28480	1901-1115
A21CR9	1902-0175	5	2	DIODE-ZNR 100V 5% PD=1W IR=5UA	28480	1902-0175
A21CR10	1901-0871	6		DIODE-PWR RECT 150V 2.5A 25NS	12969	UES1103
A21CR11	1902-0175	5		DIODE-ZNR 100V 5% PD=1W IR=5UA	28480	1902-0175
A21CR12	1901-0871	6		DIODE-PWR RECT 150V 2.5A 25NS	12969	UES1103
A21CR13	1901-0050	3	1	DIODE-SWITCHING 80V 200MA 2NS DO-35	28480	1901-0050
A21H1	0380-1638	8	2	SPACER SNAP-IN	28480	0380-1638
A21H2	2190-0019	6	1	WASHER-LK HLCL NO. 4 .115-IN-ID	28480	2190-0019
A21H3	2200-0147	4	1	SCREW-MACH 4-40 .5-IN-LG PAN-HD-POZI	28480	2200-0147
A21H4	2260-0002	6	1	NUT-HEX-DBL-CHAM 4-40-THD .062-IN-THK	28480	2260-0002
A21J1	1251-8312	7	1	CONNECTOR 20-PIN F FLAT CABLE	28480	1251-8312
A21J2	1251-8310	5	1	CONNECTOR 6-PIN F FLAT CABLE	28480	1251-8310
A21J3	1251-4245	7	1	CONNECTOR 2-PIN M POST TYPE	28480	1251-4245
A21J4	1251-8235	3	1	CONN-UTIL MT-LK 4-CKT 4-CONT	28480	1251-8235
A21L1	04945-80047	9	2	CHOKE-CM 135UH	28480	04945-80047
A21L2	04945-80047	9		CHOKE-CM 135UH	28480	04945-80047
A21L3	04945-80045	7	1	CHOKE-CM 90UH	28480	04945-80045
A21L4	04945-80046	8	4	CHOKE-CM 215UH	28480	04945-80046
A21L5	04945-80046	8		CHOKE-CM 215UH	28480	04945-80046
A21L6	9140-0826	5	2	INDUCTOR 25UH	28480	9140-0826
A21L7	9140-0826	5		INDUCTOR 25UH	28480	9140-0826
A21L8	9140-0807	2	1	CHOKE-TOROIDAL	28480	9140-0807
A21L9	9140-0129	1	2	INDUCTOR RF-CH-MLD 220UH 5% .166DX.385LG	28480	9140-0129
A21L10	9140-0129	1		INDUCTOR RF-CH-MLD 220UH 5% .166DX.385LG	28480	9140-0129
A21L11	04945-80046	8		CHOKE-CM 215UH	28480	04945-80046
A21L12	04945-80046	8	1	CHOKE-CM 215UH	28480	04945-80046
A21L13	9100-1629	4		INDUCTOR RF-CH-MLD 47UH 5% .166DX.385LG	28480	9100-1629
A21P1	1251-7966	5	1	CONNECTOR-PC EDGE 11-CONT/ROW 2-ROWS	28480	1251-7966
A21P1	1251-7971	2	1	CONNECTOR-PC EDGE 11-CONT/ROW 2-ROWS	28480	1251-7971
A21Q1	1854-0575	6	1	TRANSISTOR NPN SI PD=625MW FT=50MHZ	04713	MPS-A42
A21Q2	1854-0764	5	1	TRANSISTOR NPN SI PD=10W FT=60MHZ	04713	MPS U-10
A21Q3	1853-0336	5	1	TRANSISTOR PNP SI PD=625MW FT=50MHZ	04713	MPSA92
A21Q4	1853-0423	1	1	TRANSISTOR PNP SI PD=1W FT=60MHZ	04713	MPS U-60
A21R1	0757-0394	0	4	RESISTOR 51.1 1% .125W F TC=0+-100	24546	C4-1/8-T0-51R1-F
A21R2	0757-0394	0		RESISTOR 51.1 1% .125W F TC=0+-100	24546	C4-1/8-T0-51R1-F
A21R3	0757-0280	3	2	RESISTOR 1K 1% .125W F TC=0+-100	24546	C4-1/8-T0-1001-F
A21R4	0698-3159	5	2	RESISTOR 26.1K 1% .125W F TC=0+-100	24546	C4-1/8-T0-2612-F
A21R5	0757-0401	0	1	RESISTOR 100 1% .125W F TC=0+-100	24546	C4-1/8-T0-101-F
A21R6	0698-3159	5		RESISTOR 26.1K 1% .125W F TC=0+-100	24546	C4-1/8-T0-2612-F
A21R7	0757-0280	3		RESISTOR 1K 1% .125W F TC=0+-100	24546	C4-1/8-T0-1001-F
A21R8	0757-0394	0		RESISTOR 51.1 1% .125W F TC=0+-100	24546	C4-1/8-T0-51R1-F
A21R9	0757-0394	0		RESISTOR 51.1 1% .125W F TC=0+-100	24546	C4-1/8-T0-51R1-F
A21R10	0698-5454	7	1	RESISTOR 9K .1% .125W F TC=0+-50	28480	0698-5454
A21R11	0698-6446	9	1	RESISTOR 2.162K .1% .125W F TC=0+-25	28480	0698-6446
A21R12	0698-8827	4	2	RESISTOR 1M 1% .125W F TC=0+-100	28480	0698-8827
A21R13	0698-8827	4		RESISTOR 1M 1% .125W F TC=0+-100	28480	0698-8827
A21T1	9100-4296	7	1	TRANSFORMER-POWER FOR +-30VDC FLOATING	28480	9100-4296
A21T2	9100-4297	8	1	TRANSFORMER-STEP UP PRI: 50V; SEC:+-100V	28480	9100-4297
A21U1	1826-0643	0	1	IC V RGLTR-V-REF-ADJ 3/30V TO-92 PKG	28480	1826-0643
A21U2	1826-1005	0	1	IC V RGLTR-FXD-POS 4.5/5.5V TO-262 PKG	28480	1826-1005
A21W1	5060-7126	8	1	1W PR ORG/BLK	28480	5060-7126
A21W2	5060-7128	0	1	WHT-BR/WHT-BLU	28480	5060-7128
A21W3	8150-1542	4	1	WIRE 22AWG R 300V PVC 7X30 80C	28480	8150-1542

See introduction to this section for ordering information
*Indicates factory selected value

Table 6-2. 4945A Replaceable Parts (Cont'd)

Reference Designation	HP Part Number	CD	Qty	Description	Mfr Code	Mfr Part Number
	0470-0761	7	1	ADHESIVE DC 8662 POLYU 1P CLRLS-TP	28480	0470-0761
	1251-5380	3	2	CONNECTOR 2-PIN M POST TYPE	28480	1251-5380
	1400-0249	0	2	CABLE TIE .062-.625-DIA .091-WD NYL	96383	PLT1M-8
	04945-20021	3	1	DC CONN BD BLK	28480	04945-20021

See introduction to this section for ordering information
*Indicates factory selected value

Table 6-2. 4945A Replaceable Parts (Cont'd)

Reference Designation	HP Part Number	C D	Qty	Description	Mfr Code	Mfr Part Number
A22	04945-60022	8	1	MOTHER BOARD	28480	04945-60022
A22C1	0160-3508	9	19	CAPACITOR-FXD 1UF +80-20% 50VDC CER	28480	0160-3508
A22C2	0160-3508	9		CAPACITOR-FXD 1UF +80-20% 50VDC CER	28480	0160-3508
A22C3	0160-3508	9		CAPACITOR-FXD 1UF +80-20% 50VDC CER	28480	0160-3508
A22C4	0160-3508	9		CAPACITOR-FXD 1UF +80-20% 50VDC CER	28480	0160-3508
A22C5	0160-3508	9		CAPACITOR-FXD 1UF +80-20% 50VDC CER	28480	0160-3508
A22C6	0160-3508	9		CAPACITOR-FXD 1UF +80-20% 50VDC CER	28480	0160-3508
A22C7	0160-3508	9		CAPACITOR-FXD 1UF +80-20% 50VDC CER	28480	0160-3508
A22C8	0160-3508	9		CAPACITOR-FXD 1UF +80-20% 50VDC CER	28480	0160-3508
A22C9	0160-3508	9		CAPACITOR-FXD 1UF +80-20% 50VDC CER	28480	0160-3508
A22C10	0160-3508	9		CAPACITOR-FXD 1UF +80-20% 50VDC CER	28480	0160-3508
A22C11	0180-0291	3	4	CAPACITOR-FXD 1UF+-10% 35VDC TA	56289	150D105X9035A2
A22C12	0160-3508	9		CAPACITOR-FXD 1UF +80-20% 50VDC CER	28480	0160-3508
A22C13	0160-3508	9		CAPACITOR-FXD 1UF +80-20% 50VDC CER	28480	0160-3508
A22C14	0160-3508	9		CAPACITOR-FXD 1UF +80-20% 50VDC CER	28480	0160-3508
A22C15	0180-0291	3		CAPACITOR-FXD 1UF+-10% 35VDC TA	56289	150D105X9035A2
A22C16	0180-0291	3		CAPACITOR-FXD 1UF+-10% 35VDC TA	56289	150D105X9035A2
A22C17	0180-0291	3		CAPACITOR-FXD 1UF+-10% 35VDC TA	56289	150D105X9035A2
A22C18	0160-3508	9		CAPACITOR-FXD 1UF +80-20% 50VDC CER	28480	0160-3508
A22C19	0160-3508	9		CAPACITOR-FXD 1UF +80-20% 50VDC CER	28480	0160-3508
A22C20	0160-3508	9		CAPACITOR-FXD 1UF +80-20% 50VDC CER	28480	0160-3508
A22C21	0160-3508	9		CAPACITOR-FXD 1UF +80-20% 50VDC CER	28480	0160-3508
A22C22	0160-3508	9		CAPACITOR-FXD 1UF +80-20% 50VDC CER	28480	0160-3508
A22C23	0160-3508	9		CAPACITOR-FXD 1UF +80-20% 50VDC CER	28480	0160-3508
A22H1	3380-1276	0	1	SPACER-SNAP-IN .158 IN LG; .280 IN OD	00000	ORDER BY DESCRIPTION
A22H2	0510-1210	9	1	NUT-SHMET-U-TP 8-32-THD .02-IN-THK	28480	0510-1210
A22H3	1400-0249	0	1	CABLE TIE .062-.625-DIA .091-WD NYL	06383	PLT1M-8
A22H4	0400-0009	9	1	GROMMET-RND .125-IN-ID .25-IN-GRV-OD	28480	0400-0009
A22J1	1251-8312	7	1	CONNECTOR 20-PIN F FLAT CABLE	28480	1251-8312
A22J2	1251-3119	2	1	CONNECTOR 26-PIN M RECTANGULAR	28480	1251-3119
A22J3	1251-8309	2	1	CONN-12 CIRC	28480	1251-8309
A22R1	1810-0277	3	5	NETWORK-RES 10-SIP2.2K OHM X 9	01121	210A222
A22R2	1810-0277	3		NETWORK-RES 10-SIP2.2K OHM X 9	01121	210A222
A22R3	1810-0277	3		NETWORK-RES 10-SIP2.2K OHM X 9	01121	210A222
A22R4	1810-0277	3		NETWORK-RES 10-SIP2.2K OHM X 9	01121	210A222
A22R5	1810-0277	3		NETWORK-RES 10-SIP2.2K OHM X 9	01121	210A222
A22R6	0698-3441	8	2	RESISTOR 215 1% .125W F TC=0+-100	24546	C4-1/8-T0-215R-F
A22R7	0698-3444	1	2	RESISTOR 316 1% .125W F TC=0+-100	24546	C4-1/8-T0-316R-F
A22R8	0698-3441	8		RESISTOR 215 1% .125W F TC=0+-100	24546	C4-1/8-T0-215R-F
A22R9	0698-3444	1		RESISTOR 316 1% .125W F TC=0+-100	24546	C4-1/8-T0-316R-F
A22TP1	0360-0535	0	2	TERMINAL TEST POINT PCB	00000	ORDER BY DESCRIPTION
A22TP2	0360-0535	0		TERMINAL TEST POINT PCB	00000	ORDER BY DESCRIPTION
A22TP3	0360-0124	3	7	CONNECTOR-SGL CONT PIN .04-IN-BSC-SZ RND	28480	0360-0124
A22TP4	0360-0124	3		CONNECTOR-SGL CONT PIN .04-IN-BSC-SZ RND	28480	0360-0124
A22TP5	0360-0124	3		CONNECTOR-SGL CONT PIN .04-IN-BSC-SZ RND	28480	0360-0124
A22TP6	0360-0124	3		CONNECTOR-SGL CONT PIN .04-IN-BSC-SZ RND	28480	0360-0124
A22TP7	0360-0124	3		CONNECTOR-SGL CONT PIN .04-IN-BSC-SZ RND	28480	0360-0124
A22TP8	0360-0124	3		CONNECTOR-SGL CONT PIN .04-IN-BSC-SZ RND	28480	0360-0124
A22TP9	0360-0124	3		CONNECTOR-SGL CONT PIN .04-IN-BSC-SZ RND	28480	0360-0124
A22W1	04945-61013	9	2	SHIELD PR CABLE	28480	04945-61013
A22W2	04945-61013	9		SHIELD PR CABLE	28480	04945-61013
A22XA1	1251-8097	5	9	CONN-POST TYPE .100-PIN-SPCG 120-CONT	28480	1251-8097
A22XA2	1251-7300	1	8	CONN-POST TYPE .100-PIN-SPCG 50-CONT	28480	1251-7300
A22XA3	1251-7300	1		CONN-POST TYPE .100-PIN-SPCG 50-CONT	28480	1251-7300
A22XA4	1251-7300	1		CONN-POST TYPE .100-PIN-SPCG 50-CONT	28480	1251-7300
A22XA5	1251-7300	1		CONN-POST TYPE .100-PIN-SPCG 50-CONT	28480	1251-7300
A22XA6	1251-7300	1		CONN-POST TYPE .100-PIN-SPCG 50-CONT	28480	1251-7300
A22XA7	1251-7300	1		CONN-POST TYPE .100-PIN-SPCG 50-CONT	28480	1251-7300
A22XA8	1251-8097	5		CONN-POST TYPE .100-PIN-SPCG 120-CONT	28480	1251-8097
A22XA9	1251-8097	5		CONN-POST TYPE .100-PIN-SPCG 120-CONT	28480	1251-8097
A22XA10	1251-8097	5		CONN-POST TYPE .100-PIN-SPCG 120-CONT	28480	1251-8097
A22XA11	1251-8097	5		CONN-POST TYPE .100-PIN-SPCG 120-CONT	28480	1251-8097
A22XA12	1251-8097	5		CONN-POST TYPE .100-PIN-SPCG 120-CONT	28480	1251-8097
A22XA13	1251-8097	5		CONN-POST TYPE .100-PIN-SPCG 120-CONT	28480	1251-8097
A22XA15	1251-8097	5		CONN-POST TYPE .100-PIN-SPCG 120-CONT	28480	1251-8097
A22XA16	1251-7300	1		CONN-POST TYPE .100-PIN-SPCG 50-CONT	28480	1251-7300
A22XA17	1251-7300	1		CONN-POST TYPE .100-PIN-SPCG 50-CONT	28480	1251-7300
A22XA18	1251-8097	5		CONN-POST TYPE .100-PIN-SPCG 120-CONT	28480	1251-8097

See introduction to this section for ordering information
*Indicates factory selected value

Table 6-2. 4945A Replaceable Parts (Cont'd)

Reference Designation	HP Part Number	C D	Qty	Description	Mfr Code	Mfr Part Number
A25	04945-60025	1	1	FRPANEL DECODER	28480	04945-60025
A25C1	0160-0127	2	2	CAPACITOR-FXD 1UF +-20% 25VDC CER	28480	0160-0127
A25C2	0160-0127	2		CAPACITOR-FXD 1UF +-20% 25VDC CER	28480	0160-0127
A25C3	0180-0374	3	1	CAPACITOR-FXD 10UF+-10% 20VDC TA	56289	150D106X9020R2
A25C4	0160-5298	8	1	CAPACITOR-FXD .01UF +-20% 100VDC CER	28480	0160-5298
A25CR1	1990-0673	3	7	LED-LAMP LUM-INT=1.5MCD IF=20MA-MAX	28480	5082-4690
A25CR2	1990-0673	3		LED-LAMP LUM-INT=1.5MCD IF=20MA-MAX	28480	5082-4690
A25CR3	1990-0673	3		LED-LAMP LUM-INT=1.5MCD IF=20MA-MAX	28480	5082-4690
A25CR4	1990-0673	3		LED-LAMP LUM-INT=1.5MCD IF=20MA-MAX	28480	5082-4690
A25CR5	1990-0673	3		LED-LAMP LUM-INT=1.5MCD IF=20MA-MAX	28480	5082-4690
A25CR6	1990-0673	3		LED-LAMP LUM-INT=1.5MCD IF=20MA-MAX	28480	5082-4690
A25CR7	1990-0673	3		LED-LAMP LUM-INT=1.5MCD IF=20MA-MAX	28480	5082-4690
A25J1	1251-4346	9	2	CONNECTOR 20-PIN M POST TYPE	28480	1251-4346
A25J2	1251-4346	9		CONNECTOR 20-PIN M POST TYPE	28480	1251-4346
A25P1	1251-4429	9	1	CONNECTOR 20-PIN M POST TYPE	28480	1251-4429
A25R1	0757-0462	3	2	RESISTOR 75K 1% .125W F TC=0+-100	24546	C4-1/8-T0-7502-F
A25R2	0757-0462	3		RESISTOR 75K 1% .125W F TC=0+-100	24546	C4-1/8-T0-7502-F
A25R3	0698-3155	1	2	RESISTOR 4.64K 1% .125W F TC=0+-100	24546	C4-1/8-T0-4641-F
A25R4	0698-3155	1		RESISTOR 4.64K 1% .125W F TC=0+-100	24546	C4-1/8-T0-4641-F
A25R102	1810-0279	5	4	NETWORK-RES 10-SIP4.7K OHM X 9	01121	210A472
A25R103	1810-0279	5		NETWORK-RES 10-SIP4.7K OHM X 9	01121	210A472
A25R104	1810-0279	5		NETWORK-RES 10-SIP4.7K OHM X 9	01121	210A472
A25R204	1810-0279	5		NETWORK-RES 10-SIP4.7K OHM X 9	01121	210A472
A25U202	1820-2121	1	6	IC ENCDR TTL LS	01295	SN74LS348N
A25U203	1820-2121	1		IC ENCDR TTL LS	01295	SN74LS348N
A25U302	1820-2121	1		IC ENCDR TTL LS	01295	SN74LS348N
A25U303	1820-2121	1		IC ENCDR TTL LS	01295	SN74LS348N
A25U304	1820-2121	1		IC ENCDR TTL LS	01295	SN74LS348N
A25U402	1820-2121	1		IC ENCDR TTL LS	01295	SN74LS348N
A25U403	1820-1423	4	1	IC MV TTL LS MONOSTBL RETRIG DUAL	01295	SN74LS123N
A25U404	1820-1112	8	1	IC FF TTL LS D-TYPE POS-EDGE-TRIG	01295	SN74LS74AN
A25U604	1820-1997	7	1	IC FF TTL LS D-TYPE POS-EDGE-TRIG PRL-IN	01295	SN74LS374N

See introduction to this section for ordering information
*Indicates factory selected value

Table 6-2. 4945A Replaceable Parts (Cont'd)

Reference Designation	HP Part Number	C D	Qty	Description	Mfr Code	Mfr Part Number
A28	05908-69020			50 WATT 5 OUTPUT	28480	05908-69020
A28C3	0160-5538	9	2	CAPACITOR-FXD 1.5UF +-10% 160VAC(RMS)	28480	0160-5538
A28C5	0180-3047	3	2	CAPACITOR-FXD 130UF+50-10% 200VDC AL	28480	0180-3047
A28C6	0180-3047	3		CAPACITOR-FXD 130UF+50-10% 200VDC AL	28480	0180-3047
A28C7	0160-4065	5	1	CAPACITOR-FXD .1UF +-20% 250VAC(RMS)	28480	0160-4065
A28C8	0160-5538	9		CAPACITOR-FXD 1.5UF +-10% 160VAC(RMS)	28480	0160-5538
A28C9	0180-3055	3	3	CAPACITOR-FXD 100UF+50-10% 63VDC AL	28480	0180-3055
A28C10	0160-4571	8	7	CAPACITOR-FXD .1UF +80-20% 50VDC CER	28480	0160-4571
A28C11	0160-4571	8		CAPACITOR-FXD .1UF +80-20% 50VDC CER	28480	0160-4571
A28C12	0160-2496	2	1	CAPACITOR-FXD 470PF +-10% 1KVDC CER	28480	0160-2496
A28C13	0150-0050	9	2	CAPACITOR-FXD 1000PF +80-20% 1KVDC CER	28480	0150-0050
A28C15	0160-4833	5	1	CAPACITOR-FXD .022UF +-10% 100VDC CER	28480	0160-4833
A28C17	0180-2781	0	1	CAPACITOR-FXD 39UF+-10% 10VDC TA	28480	0180-2781
A28C18	0160-5166	9	1	CAPACITOR-FXD .015UF +-20% 100VDC CER	28480	0160-5166
A28C20	0160-5119	2	1	CAPACITOR-FXD .33UF +-10% 100VDC POLYP	28480	0160-5119
A28C21	0160-4571	8		CAPACITOR-FXD .1UF +80-20% 50VDC CER	28480	0160-4571
A28C22	0180-3057	5	2	CAPACITOR-FXD 820UF+100-10% 6.3VDC AL	28480	0180-3057
A28C23	0180-3057	5		CAPACITOR-FXD 820UF+100-10% 6.3VDC AL	28480	0180-3057
A28C24	0160-0127	2	2	CAPACITOR-FXD 1UF +-20% 25VDC CER	28480	0160-0127
A28C25	0160-0052	2	2	VOID	28480	0160-0052
A28C26	0180-0405	1	2	CAPACITOR-FXD 1.8UF+-10% 20VDC TA	56289	150D185X9020A2
A28C28	0180-0405	1		CAPACITOR-FXD 1.8UF+-10% 20VDC TA	56289	150D185X9020A2
A28C29	0160-0127	2		CAPACITOR-FXD 1UF +-20% 25VDC CER	28480	0160-0127
A28C30	0160-5126	1	1	CAPACITOR-FXD .033UF +-200VDC POLYP	28480	0160-5126
A28C34	0180-3054	2	2	CAPACITOR-FXD 2200UF+75-10% 25VDC AL	28480	0180-3054
A28C36	0180-3055	3		CAPACITOR-FXD 100UF+50-10% 63VDC AL	28480	0180-3055
A28C37	0160-4571	8		CAPACITOR-FXD .1UF +80-20% 50VDC CER	28480	0160-4571
A28C39	0160-4571	8		CAPACITOR-FXD .1UF +80-20% 50VDC CER	28480	0160-4571
A28C40	0180-3054	2		CAPACITOR-FXD 2200UF+75-10% 25VDC AL	28480	0180-3054
A28C42	0160-4571	8		CAPACITOR-FXD .1UF +80-20% 50VDC CER	28480	0160-4571
A28C43	0180-3055	3		CAPACITOR-FXD 100UF+50-10% 63VDC AL	28480	0180-3055
A28C44	0160-4571	8		CAPACITOR-FXD .1UF +80-20% 50VDC CER	28480	0160-4571
A28C45	0160-0052	2		VOID	28480	0160-0052
A28C47	0160-4741	4	1	CAPACITOR-FXD .22UF +-10% 50VDC CER	28480	0160-4741
A28C49	0150-0050	9		CAPACITOR-FXD 1000PF +80-20% 1KVDC CER	28480	0150-0050
A28CR1	1901-0050	3	13	DIODE-SWITCHING 80V 200MA 2NS DO-35	28480	1901-0050
A28CR2	1901-0050	3		DIODE-SWITCHING 80V 200MA 2NS DO-35	28480	1901-0050
A28CR3	1901-0050	3		DIODE-SWITCHING 80V 200MA 2NS DO-35	28480	1901-0050
A28CR4	1901-0050	3		DIODE-SWITCHING 80V 200MA 2NS DO-35	28480	1901-0050
A28CR5	1901-0028	5	3	DIODE-PWR RECT 400V 750MA DO-29	28480	1901-0028
A28CR6	1901-0050	3		DIODE-SWITCHING 80V 200MA 2NS DO-35	28480	1901-0050
A28CR7	1901-0050	3		DIODE-SWITCHING 80V 200MA 2NS DO-35	28480	1901-0050
A28CR8	1901-0050	3		DIODE-SWITCHING 80V 200MA 2NS DO-35	28480	1901-0050
A28CR9	1901-0050	3		DIODE-SWITCHING 80V 200MA 2NS DO-35	28480	1901-0050
A28CR11	5060-2798	0	4	ASSY-DIODE & H/S	28480	5060-2798
A28CR12	5060-2798	0		ASSY-DIODE & H/S	28480	5060-2798
A28CR13	5060-2798	0		ASSY-DIODE & H/S	28480	5060-2798
A28CR14	5060-2798	0		ASSY-DIODE & H/S	28480	5060-2798
A28CR15	1901-0028	5		DIODE-PWR RECT 400V 750MA DO-29	28480	1901-0028
A28CR16	1901-0028	5		DIODE-PWR RECT 400V 750MA DO-29	28480	1901-0028
A28CR17	1901-0050	3		DIODE-SWITCHING 80V 200MA 2NS DO-35	28480	1901-0050
A28CR18	1901-0050	3		DIODE-SWITCHING 80V 200MA 2NS DO-35	28480	1901-0050
A28CR81	1884-0258	5	1	THYRISTOR-DIAC TRIG IP PULSE=2A MAX; V	28480	1884-0258
A28CR82	1901-0050	3		DIODE-SWITCHING 80V 200MA 2NS DO-35	28480	1901-0050
A28CR83	1901-0050	3		DIODE-SWITCHING 80V 200MA 2NS DO-35	28480	1901-0050
A28CR84	1901-0050	3	2	DIODE-SWITCHING 80V 200MA 2NS DO-35	28480	1901-0050
A28CR91	1901-0050	3		DIODE-SWITCHING 80V 200MA 2NS DO-35	28480	1901-0050
A28L1	5080-1936	6	1	CHOKE 230UH	28480	5080-1936
A28L2	9140-0137	1	1	INDUCTOR RF-CH-MLD 1MH 5% .2DX.45LG Q=60	28480	9140-0137
A28L3	5080-1986	8	1	REACTOR-CONTROL	28480	5080-1986
A28L4	1480-0529	7	1	PIN-ESC .071-IN-DIA 1.42-IN-LG STL	28480	1480-0529
A28L4	5080-1973	3	1	INDUCTOR 8UH	28480	5080-1973
A28L4	9170-1116	1	1	CORE-SPECIAL SHAPE FERRITE SLEEVE	28480	9170-1116
A28L5	5080-1977	7	1	COIL-10A	28480	5080-1977
A28L5	9170-1267	1	1	ADJUSTING SCREW OD: .244IN; L .875IN	28480	9170-1267
A28L6	9100-2515	9	2	INDUCTOR 100UH 10% .5DX1.25LG Q=26	28480	9100-2515
A28L7	9100-2515	9		INDUCTOR 100UH 10% .5DX1.25LG Q=26	28480	9100-2515
A28Q1	0570-1236	5	4	STUD-THD-ROD 6-32 UNC-2A .69-IN-LG BRS	28480	0570-1236
A28Q1	0590-0305	9	4	NUT-HEX-W/LKWR 6-32-THD .094-IN-THK	00000	ORDER BY DESCRIPTION
A28Q1	1205-0431	8	2	HEAT SINK TO-3-CS	28480	1205-0431
A28Q1	1855-0472	4	2	TRANSISTOR MOSFET N-CHAN TO-3	28480	1855-0472
A28Q2	0570-1236	5		STUD-THD-ROD 6-32 UNC-2A .69-IN-LG BRS	28480	0570-1236
A28Q2	0590-0305	9		NUT-HEX-W/LKWR 6-32-THD .094-IN-THK	00000	ORDER BY DESCRIPTION
A28Q2	1205-0431	8		HEAT SINK TO-3-CS	28480	1205-0431
A28Q2	1855-0472	4		TRANSISTOR MOSFET N-CHAN TO-3	28480	1855-0472

See introduction to this section for ordering information
*Indicates factory selected value

Table 6-2. 4945A Replaceable Parts (Cont'd)

Reference Designation	HP Part Number	C D	Qty	Description	Mfr Code	Mfr Part Number
A28Q3	5060-2799	1	1	ASSY-XSTR & H/S	28480	5060-2799
A28Q4	1200-0181	5	2	INSULATOR-XSTR NYLON	28480	1200-0181
A28Q4	1205-0391	9	2	HEAT SINK SGL TO-5/TO-39-CS	28480	1205-0391
A28Q4	1854-0687	1	1	TRANSISTOR NPN 2N3725A SI TO-39 PD=5W	01295	2N3725A
A28Q5	1200-0181	5		INSULATOR-XSTR NYLON	28480	1200-0181
A28Q5	1205-0391	9		HEAT SINK SGL TO-5/TO-39-CS	28480	1205-0391
A28Q5	1853-0489	9	1	TRANSISTOR PNP TO-39 PD=1W FT=100MHZ	04713	MM4032
A28Q7	1854-0477	7	2	TRANSISTOR NPN 2N2222A SI TO-18 PD=500MW	04713	2N2222A
A28Q8	1854-0477	7		TRANSISTOR NPN 2N2222A SI TO-18 PD=500MW	04713	2N2222A
A28Q9	1884-0201	8	1	THYRISTOR-SCR TO-92 VRRM=60	04713	2N5061
A28Q10	1854-0087	5	4	TRANSISTOR NPN SI PD=360MW FT=75MHZ	28480	1854-0087
A28Q11	1854-0087	5		TRANSISTOR NPN SI PD=360MW FT=75MHZ	28480	1854-0087
A28Q12	1854-0087	5		TRANSISTOR NPN SI PD=360MW FT=75MHZ	28480	1854-0087
A28Q80	1853-0281	9	1	TRANSISTOR PNP 2N2907A SI TO-18 PD=400MW	04713	2N2907A
A28Q81	1854-0087	5		TRANSISTOR NPN SI PD=360MW FT=75MHZ	28480	1854-0087
A28R1	0686-1045	9	2	RESISTOR 100K 5% .5W CC TC=0+882	01121	EB1045
A28R2	0686-1045	9		RESISTOR 100K 5% .5W CC TC=0+682	01121	EB1045
A28R3	0683-1515	2	2	RESISTOR 150 5% .25W FC TC=-400/+600	01121	CB1515
A28R4	0683-1515	2		RESISTOR 150 5% .25W FC TC=-400/+600	01121	CB1515
A28R5	0811-1066	1	1	RESISTOR .47 10% 2W PW TC=0+-300	28480	0811-1066
A28R6	0811-1063	8	2	RESISTOR 47 10% 1W PW TC=0+-150	28480	0811-1063
A28R7	0811-1063	8		RESISTOR 47 10% 1W PW TC=0+-150	28480	0811-1063
A28R10	0683-1615	3	1	RESISTOR 160 5% .25W FC TC=-400/+600	01121	CB1615
A28R12	2100-0568	1	1	RESISTOR-TRMR 100 10% C TOP-ADJ 1-TRN	28480	2100-0568
A28R13	0683-4705	8	2	RESISTOR 47 5% .25W FC TC=-400/+500	01121	CB4705
A28R14	0757-0969	5	1	RESISTOR 75K 2% .125W F TC=0+-100	24546	C4-1/8-T0-7502-G
A28R17	0683-8205	1	1	RESISTOR 82 5% .25W FC TC=-400/+500	01121	CB8205
A28R18	0683-2015	9	1	RESISTOR 200 5% .25W FC TC=-400/+600	01121	CB2015
A28R20	0689-1005	7	1	RESISTOR 10 5% 1W CC TC=0+412	01121	GB1005
A28R21	0811-1059	2	1	RESISTOR 15 5% 5W PW TC=0+-400	28480	0811-1059
A28R22	0757-0470	3	2	RESISTOR 162K 1% .125W F TC=0+-100	24546	C4-1/8-T0-1623-F
A28R23	0683-0335	2	2	RESISTOR 3.3 5% .25W FC TC=-400/+500	01121	CB33G5
A28R24	0683-6805	3	2	RESISTOR 68 5% .25W FC TC=-400/+500	01121	CB6805
A28R25	0683-6215	9	1	RESISTOR 620 5% .25W FC TC=-400/+600	01121	CB6215
A28R26	0683-4715	0	1	RESISTOR 470 5% .25W FC TC=-400/+600	01121	CB4715
A28R27	0683-3315	4	3	RESISTOR 330 5% .25W FC TC=-400/+600	01121	CB3315
A28R28	0683-4705	8		RESISTOR 47 5% .25W FC TC=-400/+500	01121	CB4705
A28R29	0683-5615	1	1	RESISTOR 560 5% .25W FC TC=-400/+600	01121	CB5615
A28R30	0757-0413	4	2	RESISTOR 392 1% .125W F TC=0+-100	24546	C4-1/8-T0-392R-F
A28R31	0757-0466	7	1	RESISTOR 110K 1% .125W F TC=0+-100	24546	C4-1/8-T0-1103-F
A28R32	0683-1015	7	4	RESISTOR 100 5% .25W FC TC=-400/+500	01121	CB1015
A28R33	0757-0290	5	1	RESISTOR 6.19K 1% .125W F TC=0+-100	19701	MF4C1/8-T0-6191-F
A28R34	0683-3925	2	2	RESISTOR 3.9K 5% .25W FC TC=-400/+700	01121	CB3925
A28R35	0757-0435	0	1	RESISTOR 3.92K 1% .125W F TC=0+-100	24546	C4-1/8-T0-3921-F
A28R36	0683-6805	3		RESISTOR 68 5% .25W FC TC=-400/+500	01121	CB6805
A28R37	2100-3252	6	1	RESISTOR-TRMR 5K 10% C TOP-ADJ 1-TRN	28480	2100-3252
A28R38	0757-0438	3	1	RESISTOR 5.11K 1% .125W F TC=0+-100	24546	C4-1/8-T0-5111-F
A28R39	0757-0273	4	1	RESISTOR 3.01K 1% .125W F TC=0+-100	24546	C4-1/8-T0-3011-F
A28R40	0683-2005	7	1	RESISTOR 20 5% .25W FC TC=-400/+500	01121	CB2005
A28R41	0683-3925	2		RESISTOR 3.9K 5% .25W FC TC=-400/+700	01121	CB3925
A28R42	0683-2715	6	1	RESISTOR 270 5% .25W FC TC=-400/+600	01121	CB2715
A28R43	0757-0470	3		RESISTOR 162K 1% .125W F TC=0+-100	24546	C4-1/8-T0-1623-F
A28R45	0757-0270	1	1	RESISTOR 249K 1% .125W F TC=0+-100	24546	C4-1/8-T0-2493-F
A28R46	0683-1525	4	2	RESISTOR 1.5K 5% .25W FC TC=-400/+700	01121	CB1525
A28R47	0683-1015	7		RESISTOR 100 5% .25W FC TC=-400/+500	01121	CB1015
A28R48	0683-3315	4		RESISTOR 330 5% .25W FC TC=-400/+600	01121	CB3315
A28R49	0683-1015	7		RESISTOR 100 5% .25W FC TC=-400/+500	01121	CB1015
A28R54	0683-0335	2		RESISTOR 3.3 5% .25W FC TC=-400/+500	01121	CB33G5
A28R55	0757-0403	2	2	RESISTOR 121 1% .125W F TC=0+-100	24546	C4-1/8-T0-121R-F
A28R56	2100-0554	5	2	RESISTOR-TRMR 500 10% C TOP-ADJ 1-TRN	28480	2100-0554
A28R57	0683-3315	4		RESISTOR 330 5% .25W FC TC=-400/+600	01121	CB3315
A28R58	0683-1805	3	2	RESISTOR 18 5% .25W FC TC=-400/+500	01121	CB1805
A28R59	2100-0554	5		RESISTOR-TRMR 500 10% C TOP-ADJ 1-TRN	28480	2100-0554
A28R60	0757-0403	2		RESISTOR 121 1% .125W F TC=0+-100	24546	C4-1/8-T0-121R-F
A28R61	0683-1525	4		RESISTOR 1.5K 5% .25W FC TC=-400/+700	01121	CB1525
A28R62	0683-1805	3		RESISTOR 18 5% .25W FC TC=-400/+500	01121	CB1805
A28R80	0757-0200	7	1	RESISTOR 5.62K 1% .125W F TC=0+-100	24546	C4-1/8-T0-5621-F
A28R81	0683-2025	1	1	RESISTOR 2K 5% .25W FC TC=-400/+700	01121	CB2025
A28R82	0757-0447	4	1	RESISTOR 16.2K 1% .125W F TC=0+-100	24546	C4-1/8-T0-1622-F
A28R83	0757-0413	4		RESISTOR 392 1% .125W F TC=0+-100	24546	C4-1/8-T0-392R-F
A28R84	0683-3935	4	1	RESISTOR 39K 5% .25W FC TC=-400/+800	01121	CB3935
A28R85	0683-1015	7		RESISTOR 100 5% .25W FC TC=-400/+500	01121	CB1015
A28RT1	TPPNR-26124	4	1	SW-THERM 80C	28480	TPPNR-26124

See introduction to this section for ordering information
*Indicates factory selected value

Table 6-2. 4945A Replaceable Parts (Cont'd)

Reference Designation	HP Part Number	C D	Qty	Description	Mfr Code	Mfr Part Number
A28T1	5080-1933	5	1	XFMR-DRIVE	28480	5080-1933
A28T2	65512-80091	8	1	XFMR 5V 4A	28480	65512-80091
A28U1	1906-0237	8	2	DIODE-FW BRDG 600V 1A	28480	1906-0237
A28U2	1906-0237	8		DIODE-FW BRDG 600V 1A	28480	1906-0237
A28U3	5060-2802	7	1	ASSY-PCT/HS-TO3	28480	5060-2802
A28U4	1826-0161	7	1	IC OP AMP GP QUAD 14-DIP-P PKG	04713	MLM324P
A28U5	1826-0643	0	1	IC V RGLTR-V-REF-ADJ 3/30V TO-92 PKG	28480	1826-0643
A28U6	1400-1044	5	2	CLIP-SPRING 0.82 IN H; 0.50 IN W; 0.022	28480	1400-1044
A28U6	1826-0393	7	1	IC V RGLTR TO-220	27014	LM317T
A28U7	1990-0543	6	1	OPTO-ISOLATOR LED-PXSTR IF=150MA-MAX	01295	TIL116
A28U8	1400-1044	5		CLIP-SPRING 0.82 IN H; 0.50 IN W; 0.022	28480	1400-1044
A28U8	1826-0527	9	1	IC 337 V RGLTR TO-220	27014	LM337T
A28U9	1990-0664	2	1	OPTO-ISOLATOR LED-PXSTR IF=50MA-MAX	24972	CNY 21
A28VR1	1902-3295	6	1	DIODE-ZNR 33.2V 5% DO-35 PD=.4W	28480	1902-3295
A28VR3	1902-1349	7	1	DIODE-ZNR 5.9V 2% PD=.4W	28480	1902-1349
A28VR4	1902-0779	5	4	DIODE-ZNR 11.8V 5% DO-15 PD=1W TC=+.064%	28480	1902-0779
A28VR5	1902-0779	5		DIODE-ZNR 11.8V 5% DO-15 PD=1W TC=+.064%	28480	1902-0779
A28VR6	1902-0779	5		DIODE-ZNR 11.8V 5% DO-15 PD=1W TC=+.064%	28480	1902-0779
A28VR7	1902-0779	5		DIODE-ZNR 11.8V 5% DO-15 PD=1W TC=+.064%	28480	1902-0779
A28VR9	1902-0080	1	2	DIODE-ZNR 14.7V 2% DO-14 PD=.4W TC=+.08%	28480	1902-0080
A28VR10	1902-3214	9	1	DIODE-ZNR 16.2V 2% DO-35 PD=.4W	28480	1902-3214
A28VR80	1902-0080	1		DIODE-ZNR 14.7V 2% DO-14 PD=.4W TC=+.08%	28480	1902-0080
A28VR81	1902-0182	4	2	DIODE-ZNR 20.5V 5% DO-35 PD=.4W	28480	1902-0182
A28VR82	1902-0182	4		DIODE-ZNR 20.5V 5% DO-35 PD=.4W	28480	1902-0182
A28VR91	1902-0943	5	1	DIODE-ZNR 2.4V 5% DO-35 PD=.4W	28480	1902-0943
A28W2	0757-0424	7	2	RESISTOR 1.1K 1% .125W F TC=0+-100	24546	C4-1/8-T0-1101-F
A28W3	0757-0424	7		RESISTOR 1.1K 1% .125W F TC=0+-100	24546	C4-1/8-T0-1101-F
	0340-1071	9	2	INSULATOR NOMEX-NYL-PPR	28480	0340-1071
	0403-0282	6	4	BUMPER FOOT-ADH MTG 12.7-MM-WD	28480	0403-0282 .
	1251-0679	3	2	CONTACT-CONN U/W-POST-TYPE FEM CRP	28480	1251-0679
	1251-4145	6	1	CONNECTOR 2-PIN F POST TYPE	28480	1251-4145
	1390-0515	0	5	FASTENER-SNAP-IN NUT NUT-EXPANSION; FOR	28480	1390-0515
	2515-0003	8	5	SCREW-MACH 8-32 .375-IN-LG PAN-HD-PHL	00000	ORDER BY DESCRIPTION
	7121-0850	3	1	LABEL-WARNING 1.75-IN-WD 2.5-IN-LG PPR	76381	7101
	7121-4313	1	1	LABEL-INFO ID	28480	7121-4313
	8120-2464	8	10	CABLE-UNSHLD 22AWG 2-CNDCT UL-1430	28480	8120-2464
	65908-00001	0	1	CHASSIS HS	28480	65908-00001
	5020-2638	3	1	PCB-60UT PFET	28480	5020-2638
	2110-0554	6	1	FUSEHOLDER-8-PIN SKT 5A 125V	28480	2110-0554
	2110-0683	2	1	FUSE .75 AMP	28480	2110-0683

See introduction to this section for ordering information
*Indicates factory selected value

Table 6-2. 4945A Replaceable Parts (Cont'd)

Reference Designation	HP Part Number	C D	Qty	Description	Mfr Code	Mfr Part Number
A29	65909-69020	8	1	50 WATT 5 OUTPUT	28480	65908-69020
A29C3	0160-5538	9	2	CAPACITOR-FXD 1.5UF +-10% 160VAC(RMS)	28480	0160-5538
A29C7	0160-4065	5	1	CAPACITOR-FXD .1UF +-20% 250VAC(RMS)	28480	0160-4065
A29C8	0160-5538	9		CAPACITOR-FXD 1.5UF +-10% 160VAC(RMS)	28480	0160-5538
A29C9	0180-3055	3	3	CAPACITOR-FXD 100UF+50-10% 63VDC AL	28480	0180-3055
A29C10	0160-4571	8	9	CAPACITOR-FXD .1UF +80-20% 50VDC CER	28480	0160-4571
A29C11	0160-4571	8		CAPACITOR-FXD .1UF +80-20% 50VDC CER	28480	0160-4571
A29C12	0160-2496	2	1	CAPACITOR-FXD 470PF +-10% 1KVDC CER	28480	0160-2496
A29C13	0150-0050	9	2	CAPACITOR-FXD 1000PF +80-20% 1KVDC CER	28480	0150-0050
A29C15	0160-4833	5	1	CAPACITOR-FXD .022UF +-10% 100VDC CER	28480	0160-4833
A29C17	0180-2781	0	1	CAPACITOR-FXD 39UF+-10% 10VDC TA	28480	0180-2781
A29C18	0160-5166	9	1	CAPACITOR-FXD .015UF +-20% 100VDC CER	28480	0160-5166
A29C20	0160-5119	2	1	CAPACITOR-FXD .33UF +-10% 100VDC POLYP	28480	0160-5119
A29C21	0160-4571	8		CAPACITOR-FXD .1UF +80-20% 50VDC CER	28480	0160-4571
A29C22	0180-3057	5	2	CAPACITOR-FXD 820UF+100-10% 6.3VDC AL	28480	0180-3057
A29C23	0180-3057	5		CAPACITOR-FXD 820UF+100-10% 6.3VDC AL	28480	0180-3057
A29C24	0160-0127	2	2	CAPACITOR-FXD 1UF +-20% 25VDC CER	28480	0160-0127
A29C25	0150-0052	1	2	CAPACITOR-FXD .05UF +-20% 400VDC CER	28480	0150-0052
A29C26	0180-0405	1	2	CAPACITOR-FXD 1.8UF+-10% 20VDC TA	56289	150D185X9020A2
A29C28	0180-0405	1		CAPACITOR-FXD 1.8UF+-10% 20VDC TA	56289	150D185X9020A2
A29C29	0160-0127	2		CAPACITOR-FXD 1UF +-20% 25VDC CER	28480	0160-0127
A29C30	0160-5125	0	1	CAPACITOR-FXD .039UF +-10% 200VDC POLYP	28480	0160-5125
A29C34	0180-3054	2	2	CAPACITOR-FXD 2200UF+75-10% 25VDC AL	28480	0180-3054
A29C36	0180-3055	3		CAPACITOR-FXD 100UF+50-10% 63VDC AL	28480	0180-3055
A29C37	0160-4571	8		CAPACITOR-FXD .1UF +80-20% 50VDC CER	28480	0160-4571
A29C38	0160-4571	8		CAPACITOR-FXD .1UF +80-20% 50VDC CER	28480	0160-4571
A29C39	0160-4571	8		CAPACITOR-FXD .1UF +80-20% 50VDC CER	28480	0160-4571
A29C40	0180-3054	2		CAPACITOR-FXD 2200UF+75-10% 25VDC AL	28480	0180-3054
A29C42	0160-4571	8		CAPACITOR-FXD .1UF +80-20% 50VDC CER	28480	0160-4571
A29C43	0180-3055	3		CAPACITOR-FXD 100UF+50-10% 63VDC AL	28480	0180-3055
A29C44	0160-4571	8		CAPACITOR-FXD .1UF +80-20% 50VDC CER	28480	0160-4571
A29C45	0150-0052	1		CAPACITOR-FXD .05UF +-20% 400VDC CER	28480	0150-0052
A29C46	0160-4571	8		CAPACITOR-FXD .1UF +80-20% 50VDC CER	28480	0160-4571
A29C47	0160-4741	4	1	CAPACITOR-FXD .22UF +-10% 50VDC CER	28480	0160-4741
A29C49	0150-0050	9		CAPACITOR-FXD 1000PF +80-20% 1KVDC CER	28480	0150-0050
A29C58	0180-3047	3	2	CAPACITOR-FXD 130UF+50-10% 200VDC AL	28480	0180-3047
A29C59	0180-3047	3		CAPACITOR-FXD 130UF+50-10% 200VDC AL	28480	0180-3047
A29CR1	1901-0050	3	13	DIODE-SWITCHING 80V 200MA 2NS DO-35	28480	1901-0050
A29CR2	1901-0050	3		DIODE-SWITCHING 80V 200MA 2NS DO-35	28480	1901-0050
A29CR3	1901-0050	3		DIODE-SWITCHING 80V 200MA 2NS DO-35	28480	1901-0050
A29CR4	1901-0050	3		DIODE-SWITCHING 80V 200MA 2NS DO-35	28480	1901-0050
A29CR5	1901-0028	5	3	DIODE-PWR RECT 400V 750MA DO-29	28480	1901-0028
A29CR6	1901-0050	3		DIODE-SWITCHING 80V 200MA 2NS DO-35	28480	1901-0050
A29CR7	1901-0050	3		DIODE-SWITCHING 80V 200MA 2NS DO-35	28480	1901-0050
A29CR8	1901-0050	3		DIODE-SWITCHING 80V 200MA 2NS DO-35	28480	1901-0050
A29CR9	1901-0050	3		DIODE-SWITCHING 80V 200MA 2NS DO-35	28480	1901-0050
A29CR11	5060-2798	0	4	ASSY-DIODE & H/S	28480	5060-2798
A29CR12	5060-2798	0		ASSY-DIODE & H/S	28480	5060-2798
A29CR13	5060-2798	0		ASSY-DIODE & H/S	28480	5060-2798
A29CR14	5060-2798	0		ASSY-DIODE & H/S	28480	5060-2798
A29CR15	1901-0028	5		DIODE-PWR RECT 400V 750MA DO-29	28480	1901-0028
A29CR16	1901-0028	5		DIODE-PWR RECT 400V 750MA DO-29	28480	1901-0028
A29CR17	1901-0050	3		DIODE-SWITCHING 80V 200MA 2NS DO-35	28480	1901-0050
A29CR18	1901-0050	3		DIODE-SWITCHING 80V 200MA 2NS DO-35	28480	1901-0050
A29CR81	1884-0258	5	1	THYRISTOR-DIAC TRIG IP PULSE=2A MAX; V	28480	1884-0258
A29CR82	1901-0050	3		DIODE-SWITCHING 80V 200MA 2NS DO-35	28480	1901-0050
A29CR83	1901-0050	3		DIODE-SWITCHING 80V 200MA 2NS DO-35	28480	1901-0050
A29CR84	1901-0050	3		DIODE-SWITCHING 80V 200MA 2NS DO-35	28480	1901-0050
A29F1	TPPNR-26476	9	2	FUSE 3.75A PICO2	28480	TPPNR-26476
A29F1	2110-0554	6	2	FUSEHOLDER-BIPIN SKT 5A 125 V	75915	281005
A29F4	TPPNR-26476	9		FUSE 3.75A PICO2	28480	TPPNR-26476
A29F4	2110-0554	6		FUSEHOLDER-BIPIN SKT 5A 125 V	75915	281005
A29L1	5080-1936	8	1	CHOKE 230UH	28480	5080-1936
A29L2	9140-0137	1	1	INDUCTOR RF-CH-MLD 1MH 5% .2DX.45LG Q=60	28480	9140-0137
A29L4	1480-0529	7	1	PIN-ESC .071-IN-DIA 1.42-IN-LG STL	28480	1480-0529
A29L4	5080-1973	3	1	INDUCTOR 8UH	28480	5080-1973
A29L4	9170-1116	1	1	CORE-SPECIAL SHAPE FERRITE SLEEVE	28480	9170-1116
A29L6	9100-2515	9	2	INDUCTOR 100UH 10% .5DX1.25LG Q=26	28480	9100-2515
A29L7	9100-2515	9		INDUCTOR 100UH 10% .5DX1.25LG Q=26	28480	9100-2515

See introduction to this section for ordering information
*Indicates factory selected value

Table 6-2. 4945A Replaceable Parts (Cont'd)

Reference Designation	HP Part Number	C D	Qty	Description	Mfr Code	Mfr Part Number
A29Q1	0570-1236	5	2	STUD-THD-ROD 6-32 UNC-2A .69-IN-LG BRS	28480	0570-1236
A29Q1	0590-0305	9	2	NUT-HEX-W/LKWR 6-32-THD .094-IN-THK	00000	ORDER BY DESCRIPTION
A29Q1	1205-0431	8	2	HEAT SINK TO-3-CS	28480	1205-0431
A29Q1	1855-0472	4	2	TRANSISTOR MOSFET N-CHAN TO-3	28480	1855-0472
A29Q2	0570-1236	5		STUD-THD-ROD 6-32 UNC-2A .69-IN-LG BRS	28480	0570-1236
A29Q2	0590-0305	9		NUT-HEX-W/LKWR 6-32-THD .094-IN-THK	00000	ORDER BY DESCRIPTION
A29Q2	1205-0431	8		HEAT SINK TO-3-CS	28480	1205-0431
A29Q2	1855-0472	4		TRANSISTOR MOSFET N-CHAN TO-3	28480	1855-0472
A29Q3	5060-2799	1	1	ASSY-XSTR & H/S	28480	5060-2799
A29Q4	1200-0181	5	2	INSULATOR-XSTR NYLON	28480	1200-0181
A29Q4	1205-0391	9	2	HEAT SINK SGL TO-5/TO-39-CS	28480	1205-0391
A29Q4	1854-0687	1	1	TRANSISTOR NPN 2N3725A SI TO-39 PD=5W	01295	2N3725A
A29Q5	1200-0181	5		INSULATOR-XSTR NYLON	28480	1200-0181
A29Q5	1205-0391	9		HEAT SINK SGL TO-5/TO-39-CS	28480	1205-0391
A29Q5	1853-0489	9	1	TRANSISTOR PNP TO-39 PD=1W FT=100MHZ	04713	MM4032
A29Q7	1854-0477	7	2	TRANSISTOR NPN 2N2222A SI TO-18 PD=500MW	04713	2N2222A
A29Q8	1854-0477	7		TRANSISTOR NPN 2N2222A SI TO-18 PD=500MW	04713	2N2222A
A29Q9	1884-0201	8	1	THYRISTOR-SCR TO-92 VRRM=60	04713	2N5061
A29Q10	1854-0087	5	4	TRANSISTOR NPN SI PD=360MW FT=75MHZ	28480	1854-0087
A29Q11	1854-0087	5		TRANSISTOR NPN SI PD=360MW FT=75MHZ	28480	1854-0087
A29Q12	1854-0087	5		TRANSISTOR NPN SI PD=360MW FT=75MHZ	28480	1854-0087
A29Q80	1853-0281	9	1	TRANSISTOR PNP 2N2907A SI TO-18 PD=400MW	04713	2N2907A
A29Q81	1854-0087	5		TRANSISTOR NPN SI PD=360MW FT=75MHZ	28480	1854-0087
A29R3	0683-1515	2	2	RESISTOR 150 5% .25W FC TC=-400/+600	01121	CB1515
A29R4	0683-1515	2		RESISTOR 150 5% .25W FC TC=-400/+600	01121	CB1515
A29R5	0811-1066	1	1	RESISTOR .47 10% 2W PW TC=0+-300	28480	0811-1066
A29R6	0811-1063	8	2	RESISTOR 47 10% 1W PW TC=0+-150	28480	0811-1063
A29R7	0811-1063	8		RESISTOR 47 10% 1W PW TC=0+-150	28480	0811-1063
A29R10	0683-1615	3	1	RESISTOR 160 5% .25W FC TC=-400/+600	01121	CB1615
A29R11	0686-1045	9	2	RESISTOR 100K 5% .5W CC TC=0+882	01121	EB1045
A29R12	0686-1045	9		RESISTOR 100K 5% .5W CC TC=0+882	01121	EB1045
A29R12	2100-0568	1	1	RESISTOR-TRMR 100 10% C TOP-ADJ 1-TRN	28480	2100-0568
A29R13	0683-4705	8	2	RESISTOR 47 5% .25W FC TC=-400/+500	01121	CB4705
A29R14	0757-0969	5	1	RESISTOR 75K 2% .125W F TC=0+-100	24546	C4-1/8-T0-7502-G
A29R17	0683-8205	1	1	RESISTOR 82 5% .25W FC TC=-400/+500	01121	CB8205
A29R18	0683-2015	9	1	RESISTOR 200 5% .25W FC TC=-400/+600	01121	CB2015
A29R20	0689-1005	7	1	RESISTOR 10 5% 1W CC TC=0+412	01121	GB1005
A29R21	0811-1059	2	1	RESISTOR 15 5% 5W PW TC=0+-400	28480	0811-1059
A29R22	0757-0470	3	2	RESISTOR 162K 1% .125W F TC=0+-100	24546	C4-1/8-T0-1623-F
A29R23	0683-0335	2	2	RESISTOR 3.3 5% .25W FC TC=-400/+500	01121	CB33G5
A29R24	0683-6805	3	2	RESISTOR 68 5% .25W FC TC=-400/+500	01121	CB6805
A29R25	0683-6215	9	1	RESISTOR 620 5% .25W FC TC=-400/+600	01121	CB6215
A29R26	0683-4715	0	1	RESISTOR 470 5% .25W FC TC=-400/+630	01121	CB4715
A29R27	0683-3315	4	3	RESISTOR 330 5% .25W FC TC=-400/+600	01121	CB3315
A29R28	0683-4705	8		RESISTOR 47 5% .25W FC TC=-400/+500	01121	CB4705
A29R29	0683-5615	1	1	RESISTOR 560 5% .25W FC TC=-400/+600	01121	CB5615
A29R30	0757-0413	4	2	RESISTOR 392 1% .125W F TC=0+-100	24546	C4-1/8-T0-392R-F
A29R31	0757-0466	7	1	RESISTOR 110K 1% .125W F TC=0+-100	24546	C4-1/8-T0-1103-F
A29R32	0683-1015	7	4	RESISTOR 100 5% .25W FC TC=-400/+500	01121	CB1015
A29R33	0757-0290	5	1	RESISTOR 6.19K 1% .125W F TC=0+-100	19701	MF4C1/8-T0-6191-F
A29R34	0683-3925	2	2	RESISTOR 3.9K 5% .25W FC TC=-400/+700	01121	CB3925
A29R35	0757-0435	0	1	RESISTOR 3.92K 1% .125W F TC=0+-100	24546	C4-1/8-T0-3921-F
A29R36	0683-6805	3		RESISTOR 68 5% .25W FC TC=-400/+500	01121	CB6805
A29R37	2100-3252	6	1	RESISTOR-TRMR 5K 10% C TOP-ADJ 1-TRN	28480	2100-3252
A29R38	0757-0438	3	1	RESISTOR 5.11K 1% .125W F TC=0+-100	24546	C4-1/8-T0-5111-F
A29R39	0757-0273	4	1	RESISTOR 3.01K 1% .125W F TC=0+-100	24546	C4-1/8-T0-3011-F
A29R40	0683-2005	7	1	RESISTOR 20 5% .25W FC TC=-400/+500	01121	CB2005
A29R41	0683-3925	2		RESISTOR 3.9K 5% .25W FC TC=-400/+700	01121	CB3925
A29R42	0683-2715	6	1	RESISTOR 270 5% .25W FC TC=-400/+630	01121	CB2715
A29R43	0757-0470	3		RESISTOR 162K 1% .125W F TC=0+-100	24546	C4-1/8-T0-1623-F
A29R45	0757-0270	1	1	RESISTOR 249K 1% .125W F TC=0+-100	24546	C4-1/8-T0-2493-F
A29R46	0683-1525	4	2	RESISTOR 1.5K 5% .25W FC TC=-400/+700	01121	CB1525
A29R47	0683-1015	7		RESISTOR 100 5% .25W FC TC=-400/+500	01121	CB1015
A29R48	0683-3315	4		RESISTOR 330 5% .25W FC TC=-400/+600	01121	CB3315
A29R49	0683-1015	7		RESISTOR 100 5% .25W FC TC=-400/+500	01121	CB1015
A29R54	0683-0335	2		RESISTOR 3.3 5% .25W FC TC=-400/+500	01121	CB33G5
A29R55	0757-0403	2	2	RESISTOR 121 1% .125W F TC=0+-100	24546	C4-1/8-T0-121R-F
A29R56	2100-0554	5	2	RESISTOR-TRMR 500 10% C TOP-ADJ 1-TRN	28480	2100-0554
A29R57	0683-3315	4		RESISTOR 330 5% .25W FC TC=-400/+600	01121	CB3315
A29R58	0683-1805	3	2	RESISTOR 18 5% .25W FC TC=-400/+500	01121	CB1805
A29R59	2100-0554	5		RESISTOR-TRMR 500 10% C TOP-ADJ 1-TRN	28480	2100-0554
A29R60	0757-0403	2		RESISTOR 121 1% .125W F TC=0+-100	24546	C4-1/8-T0-121R-F
A29R61	0683-1525	4		RESISTOR 1.5K 5% .25W FC TC=-400/+700	01121	CB1525
A29R62	0683-1805	3		RESISTOR 18 5% .25W FC TC=-400/+500	01121	CB1805
A29R80	0757-0290	7	1	RESISTOR 5.62K 1% .125W F TC=0+-100	24546	C4-1/8-T0-5621-F
A29R81	0683-2025	1	1	RESISTOR 2K 5% .25W FC TC=-400/+700	01121	CB2025
A29R82	0757-0447	4	1	RESISTOR 16.2K 1% .125W F TC=0+-100	24546	C4-1/8-T0-1622-F
A29R83	0757-0413	4		RESISTOR 392 1% .125W F TC=0+-100	24546	C4-1/8-T0-392R-F

See introduction to this section for ordering information
*Indicates factory selected value

Table 6-2. 4945A Replaceable Parts (Cont'd)

Reference Designation	HP Part Number	C D	Qty	Description	Mfr Code	Mfr Part Number
A29R84	0683-3935	4	1	RESISTOR 39K 5% .25W FC TC=-400/+800	01121	CB3935
A29R85	0683-1015	7		RESISTOR 100 5% .25W FC TC=-400/+500	01121	CB1015
A29T1	5080-1933	5	1	XFMR-DRIVE	28480	5080-1933
A29T2	5080-1998	2	1	XFMR 300W-250W	28480	5080-1998
A29T5	TPPNR-26124	4	1	SW-THERM 80C	28480	TPPNR-26124
A29U1	1906-0237	8	2	DIODE-FW BRDG 600V 1A	28480	1906-0237
A29U2	1906-0237	8		DIODE-FW BRDG 600V 1A	28480	1906-0237
A29U3	5060-2802	7	1	ASSY-PCT/HS-TO3	28480	5060-2802
A29U4	1826-0161	7	1	IC OP AMP GP QUAD 14-DIP-P PKG	04713	MLM324P
A29U5	1826-0643	0	1	IC V RGLTR-V-REF-ADJ 3/30V TO-92 PKG	28480	1826-0643
A29U6	1400-1044	5	2	CLIP-SPRING 0.82 IN H; 0.50 IN W; 0.322	28480	1400-1044
A29U6	1826-0393	7	1	IC V RGLTR TO-220	27014	LM317T
A29U7	1990-0543	6	1	OPTO-ISOLATOR LED-PXSTR IF=150MA-MAX	01295	TIL116
A29U8	1400-1044	5		CLIP-SPRING 0.82 IN H; 0.50 IN W; 0.022	28480	1400-1044
A29U8	1826-0527	9	1	IC 337 V RGLTR TO-220	27014	LM337T
A29U9	1990-0664	2	1	OPTO-ISOLATOR LED-PXSTR IF=50MA-MAX	24972	CNY 21
A29VR1	1902-3295	6	1	DIODE-ZNR 33.2V 5% DO-35 PD=.4W	28480	1902-3295
A29VR3	1902-1349	7	1	DIODE-ZNR 5.9V 2% PD=.4W	28480	1902-1349
A29VR4	1902-0779	5	4	DIODE-ZNR 11.8V 5% DO-15 PD=1W TC=+.064%	28480	1902-0779
A29VR5	1902-0779	5		DIODE-ZNR 11.8V 5% DO-15 PD=1W TC=+.064%	28480	1902-0779
A29VR6	1902-0779	5		DIODE-ZNR 11.8V 5% DO-15 PD=1W TC=+.064%	28480	1902-0779
A29VR7	1902-0779	5		DIODE-ZNR 11.8V 5% DO-15 PD=1W TC=+.064%	28480	1902-0779
A29VR9	1902-3180	8	1	DIODE-ZNR 11.0V 2% DO-35 PD=.4W	28480	1902-3180
A29VR10	1902-3194	4	1	DIODE-ZNR 13.3V 2% DO-35 PD=.4W	28480	1902-3194
A29VR80	1902-0080	1	1	DIODE-ZNR 14.7V 2% DO-14 PD=.4W TC=+.08%	28480	1902-0080
A29VR81	1902-0182	4	2	DIODE-ZNR 20.5V 5% DO-35 PD=.4W	28480	1902-0182
A29VR82	1902-0182	4		DIODE-ZNR 20.5V 5% DO-35 PD=.4W	28480	1902-0182
A29W2	0757-0422	5	2	RESISTOR 909 1% .125W F TC=0+-100	24546	C4-1/8-T0-909R-F
A29W3	0757-0422	5		RESISTOR 909 1% .125W F TC=0+-100	24546	C4-1/8-T0-909R-F
	0340-1071	9	2	INSULATOR NOMEX-NYL-PPR	28480	0340-1071
	0403-0282	6	4	BUMPER FOOT-ADH MTG 12.7-MM-WD	28480	0403-0282
	1390-0515	0	5	FASTENER-SNAP-IN NUT NUT-EXPANSION; FOR	28480	1390-0515
	2515-0003	8	5	SCREW-MACH 8-32 .375-IN-LG PAN-HD-PHL	00000	ORDER BY DESCRIPTION
	7121-4388	0	1	LABEL-INFO ID	28480	7121-4388
	65909-00001	1	1	CHASSIS MS	28480	65909-00001
	5080-1977	7	1	COIL-10A	28480	5080-1977
	5080-1986	8	1	REACTOR-CONTROL	28480	5080-1986
	5020-2638	3	1	PCB-60UT PFET	28480	5020-2638
	4174-0274	3	50	PLASTIC-CUCLD 2/2 .059-THK FR-4	28480	4174-0274

See introduction to this section for ordering information
*Indicates factory selected value

Table 6-2. 4945A Replaceable Parts (Cont'd)

Reference Designation	HP Part Number	C D	Qty	Description	Mfr Code	Mfr Part Number
				MECHANICAL PARTS		
A1	04945-60001	3	1	RECEIVER INPUT	28480	04945-60001
A2	04945-60002	4	1	FILTER BOARD	28480	04945-60002
A3	04945-60003	5	1	NLD/MODEM	28480	04945-60003
A4	04945-60004	6	1	AUTORANGE AMP	28480	04945-60004
A5	04945-60005	7	1	DETECTOR BOARD	28480	04945-60005
A6	04945-60006	8	1	JITTER BOARD	28480	04945-60006
A7	04945-60007	9	1	US ENV DELAY	28480	04945-60007
A8	04945-60008	0	1	FREQ COUNTER	28480	04945-60008
A9	04945-60009	1	1	TRANSIENTS	28480	04945-60009
A10	04945-60010	4	1	RCVR PROCESSOR	28480	04945-60010
A11	04945-60011	5	1	SYSTEM PROCESSOR	28480	04945-60011
A12	04945-60012	6	1	SYSTEM MEMORY	28480	04945-60012
A13	04945-60013	7	1	VIDEO GENERATOR	28480	04945-60013
A14	04945-60015	9	1	TRANSMIT CONTROL	28480	04945-60015
A15	04945-60016	0	1	WAVEFORM GEN BD	28480	04945-60016
A17	04945-60017	1	1	ACTIVE OUTPUT BD	28480	04945-60017
A18	04945-60018	2	1	TRANSMIT OUTPUT	28480	04945-60018
A19	04945-60019	3	1	CRT DRIVER BOARD	28480	04945-60019
A20	04945-60020	6	1	AC MAIN SWITCH	28480	04945-60020
A21	04945-60021	7	1	DC CONNECT BOARD	28480	04945-60021
A22	04945-60022	8	1	MOTHER BOARD	28480	04945-60022
A23	04945-62601			CRT/YOKE ASSY	28480	04945-62601
A25	04945-60025	1	1	FR PANEL DECODER	28480	04945-60025
A28	65908-69020	1	1	POWER SUPPLY 15V	28480	65908A
A29	65909-69020	2	1	POWER SUPPLY 12V	28480	65909A
A30	04945-62602	8		FRONT PANEL ASSY	28480	04945-62602
A58	04945-60058	0	1	FR PANEL CONNECT	28480	04945-60058
A59	04945-60059	1	1	REAR PNL CONNECT	28480	04945-60059
F1	2110-0381	7	1	FUSE 3A 250V TD 1.25X.25	28480	2110-0381
H1	2510-0043	6	4	SCREW-MACH 8-32 .312-IN-LG PAN-HD-POZI	00000	ORDER BY DESCRIPTION
H2	3050-0001	1	2	WASHER-FL MTLC NO. 8 .172-IN-ID	28480	3050-0001
H3	2420-0023	1	12	NUT-HEX-W/LKWR 6-32-THD .109-IN-THK	28480	2420-0023
H4	3050-0066	8	1	WASHER-FL MTLC NO. 6 .147-IN-ID	28480	3050-0066
H5	1400-0024	9	1	CLAMP-CABLE .25-DIA .5-WD NYL	28480	1400-0024
H6	2360-0121	2	1	SCREW-MACH 6-32 .5-IN-LG PAN-HD-POZI	00000	ORDER BY DESCRIPTION
H7	2360-0117	6	3	SCREW-MACH 6-32 .375-IN-LG PAN-HD-POZI	00000	ORDER BY DESCRIPTION
H8	2360-0125	6	2	SCREW-MACH 6-32 .75-IN-LG PAN-HD-POZI	00000	ORDER BY DESCRIPTION
H9	2360-0115	4	4	SCREW-MACH 6-32 .312-IN-LG PAN-HD-POZI	00000	ORDER BY DESCRIPTION
H10	2360-0242	8	4	SCREW-MACH 6-32 1.25-IN-LG PAN-HD-POZI	00000	ORDER BY DESCRIPTION
H11	0380-0829	7	6	SPACER-RND .5-IN-LG .156-IN-ID	00000	ORDER BY DESCRIPTION
H12	3050-0304	7	1	WASHER-FL MTLC 5/16 IN .375-IN-ID	28480	3050-0304
H13	2950-0001	8	1	NUT-HEX-DBL-CHAM 3/8-32-THD .094-IN-THK	00000	ORDER BY DESCRIPTION
H14	0340-0732	7	6	INSULATOR-BDG POST POLYC	28480	0340-0732
H15	2680-0104	9	2	SCREW-MACH 10-32 .5-IN-LG 100 DEG	00000	ORDER BY DESCRIPTION
H16	3050-1109	2	2	WASHER-SHLDR 5.0 MM 5.6-MM-ID 15.9-MM-OD	28480	3050-1109
H17	2110-0569	3	1	FUSEHOLDER COMPONENT NUT; THREAD M12.7	28480	2110-0569
H18	1400-0090	9	1	FUSEHOLDER COMPONENT FOR USE ON	28480	1400-0090
H19	2510-0049	2	4	SCREW-MACH 8-32 .5-IN-LG PAN-HD-POZI	00000	ORDER BY DESCRIPTION
H20	2360-0113	2	8	SCREW-MACH 6-32 .25-IN-LG PAN-HD-POZI	00000	ORDER BY DESCRIPTION
H21	2510-0133	5	12	SCREW-MACH 8-32 .188-IN-LG PAN-HD-POZI	00000	ORDER BY DESCRIPTION
H22	0624-0575	8	34	SCREW-TPG 8-18 .312-IN-LG PAN-HD-POZI	28480	0624-0575
H23	2680-0099	1	2	SCREW-MACH 10-32 .375-IN-LG PAN-HD-POZI	00000	ORDER BY DESCRIPTION
H24	2190-0018	5	4	WASHER-LK HLCL NO.6 .141-IN-ID	28480	2190-0018
H25	2360-0127	8	4	SCREW-MACH 6-32 .875-IN-LG PAN-HD-POZI	28480	2360-0127
H26	0590-0167	1	4	NUT-THUMB G-32 THD BRS	28480	0590-0167
LS1	04945-61616	8	1	SPEAKER ASSY	28480	04945-61616
M1	04945-61615	7	1	FAN ASSEMBLY	28480	04945-61615
MP1	04945-40003	3	1	BEZEL	28480	04945-40003
MP2	7120-3812	1	1	LABEL-WARNING .1-IN-WD 2.6-IN-LG MYLAR	28480	7120-3812
MP3	1000-0653	2	1	GLASS CTRS FC PL	28480	1000-0653
MP4	5041-0201	6	1	KEY CAP WHITE	28480	5041-0201
MP5	5040-7675	0	2	PWR SW PUSH ROD	28480	5040-7675
MP6	04945-62603	5	1	REAR PANEL ASSY	28480	04945-62603
MP6	04945-62606	8	1	REAR PANEL ASSY	28480	04945-62606
MP7	5040-7829	6	4	FOOT-REAR	28480	5040-7829
MP8	04945-40002	2	1	FRAME REAR	28480	04945-40002
MP9	1460-1990	6	1	STAMPING-FE WIRE FRAME	28480	1460-1990
MP10	1251-3677	7	2	CONNECTOR-TEL JACK 2-CKT .25-SHK-DIA	28480	1251-3677
MP12	1510-0127	6	6	BINDING POST ASSY SGL SGL-TUR JGK	28480	1510-0127
MP13	7120-4184	2	1	LABEL-IDENTIFICATION 1-IN-WD 2.5-IN-LG	28480	7120-4184
MP14	04945-40006	6	1	DUST COVER	28480	04945-40006
MP15	04945-20042	8	2	SIDE RAIL	28480	04945-20042

See introduction to this section for ordering information
*Indicates factory selected value

Table 6-2. 4945A Replaceable Parts (Cont'd)

Reference Designation	HP Part Number	C D	Qty	Description	Mfr Code	Mfr Part Number
MP16	04945-40005	5	1	HANDLE MOLDED	28480	04945-40005
MP17	04945-20041	7	2	HANDLE BRKT	28480	04945-20041
MP18	2110-0658	1	1	FUSEHOLDER COMPONENT CONTACT PROTECTIVE	28480	2110-0658
MP19	2110-0564	8	1	FUSEHOLDER BODY 12A MAX FOR UL	H9027	031.1657
MP20	2110-0565	9	1	FUSEHOLDER CAP 12A MAX FOR UL	28480	2110-0565
MP21	04945-00022	2	1	I/O COVER RIGHT	28480	04945-00022
MP22	04945-00003	9	1	TOP COVER	28480	04945-00003
MP23	04945-00013	1	1	BOTTOM COVER	28480	04945-00013
MP24	0403-0457	7	8	ER DIVISION	28480	0403-0457
MP25	04945-00020	0	3	WIRE FRAME BRCKT	28480	04945-00020
MP27	04945-40008	8	1	WARNING COVR A19	28480	04945-40008
MP28	04945-40009	9	1	WARNING COVR A20	28480	04945-40009
MP29	3150-0218	4		FILLER-AIR 32 STD MESH MET SCREEN	28480	3150-0218
MP30	03582-04104	8		SCREEN	28480	03582-04104
W1	04945-61609	9	1	AC MAINS CABLE	28480	04945-61609
W2	04945-61601	1	1	A13-A19 CBL ASSY	28480	04945-61601
W3	04945-61602	2	1	A22-A25 CBL ASSY	28480	04945-61602
W4	04945-61606	6	1	CRT CABLE ASSY	28480	04945-61606
W5	8120-4107	0	1	CABLE-FLEX CIRCUIT 20 CONDUCTOR; COPPER	28480	8120-4107
W6	8120-4106	9	1	CABLE-FLEX CIRCUIT 6 CONDUCTOR; COPPER	28480	8120-4106
W7	8120-4108	1	1	CABLE-FLEX CIRCUIT 12 CONDUCTOR; COPPER	28480	8120-4108
				MISCELLANEOUS		
	1400-0249	0	12	CABLE TIE .062-.625-DIA .091-WD NYL	06383	PLT1M-8
	0362-0150	9	2	TERMINAL-CRIMP R-TNG #8 22-16-AWG RED	28480	0362-0150
	1400-0249	0		CABLE TIE .062-.625-DIA .091-WD NYL	06383	PLT1M-8
	7120-3185	1	1	LABEL-WARNING 1-IN-WD 2-IN-LG VINYL	28480	7120-3185
	04945-62602	4	1	FRONT PANEL ASSY	28480	04945-62602
	8120-1521	6	1	CABLE ASSY 18AWG 3-CNDCT JCK-JKT	28480	8120-1521
	04945-80003	7	1	SER TAG LABEL	28480	04945-80003
	04945-90007	2	1	OPER MANUAL	28480	04945-90007
	04945-90005	0	1	SERVICE MANUAL	28480	04945-90005
	04945-20063	3	1	RETAINER, SHAFT	28480	04945-20063

See introduction to this section for ordering information
*Indicates factory selected value

Table 6-2. 4945A Replaceable Parts (Cont'd)

Reference Designation	HP Part Number	C D	Qty	Description	Mfr Code	Mfr Part Number
				18162A HP-IB INTERFACE		
	18162-20001	1	1	HP-IB I/O BD BLK	28480	18162-20001
	0380-0644	4	2	STANDOFF-HEX .327-IN-LG 6-32THD	00000	ORDER BY DESCRIPTION
	1390-0520	7	1	FASTENER-LATCH SPR SPRING LATCH	28480	1390-0520
	1480-0225	0	1	PIN-GRV .093-IN-DIA .312-IN-LG STL	28480	1480-0225
	2190-0913	9	6	WASHER-LK HLCL NO. 4 .115-IN-ID	28480	2190-0913
	2200-0097	3	12	SCREW-MACH 4-40 .562-IN-LG 82 DEG	00000	ORDER BY DESCRIPTION
	2420-0023	1	2	NUT-HEX-W/LKWR 6-32-THD .109-IN-THK	28480	2420-0023
	8120-4155	8	1	HP IB INTFC CBL	28480	8120-4155
	5020-5258	9	6	SPCR THD 4-40	28480	5020-5258
	98046-64403	6	1	CASE-TOP PAINTED	28480	98046-64403
	98046-64404	7	1	CASE-BOTTOM PAINTED	28480	98046-64404
	18162-00001	9	1	MOUNTING PLATE	28480	18162-00001
	18162-00002	0	1	HOUSING PLATE	28480	18162-00002
	18162-60001	5	2	HP IB-I/O ASSY	28480	18162-60001
	18162-80001	7	1	IDENT LABEL HPIB	28480	18162-80001
	18162-80003	9	1	SER TAG LABEL	28480	18162-80003
				18162-60001 HP IB-I/O ASSY		
C1	0180-0374	3	1	CAPACITOR-FXD 10UF+-10% 20VDC TA	56289	150D106X9020B2
C2	0160-5298	8	10	CAPACITOR-FXD .01UF +-20% 100VDC CER	28480	0160-5298
C3	0160-5298	8		CAPACITOR-FXD .01UF +-20% 100VDC CER	28480	0160-5298
C4	0160-5298	8		CAPACITOR-FXD .01UF +-20% 100VDC CER	28480	0160-5298
C5	0160-5298	8		CAPACITOR-FXD .01UF +-20% 100VDC CER	28480	0160-5298
C6	0160-5298	8		CAPACITOR-FXD .01UF +-20% 100VDC CER	28480	0160-5298
C7	0160-4535	4	1	CAPACITOR-FXD 1UF +-10% 50VDC CER	28480	0160-4535
C8	0160-5298	8		CAPACITOR-FXD .01UF +-20% 100VDC CER	28480	0160-5298
C9	0160-5298	8		CAPACITOR-FXD .01UF +-20% 100VDC CER	28480	0160-5298
C10	0160-4789	0	2	CAPACITOR-FXD 15PF +-5% 100VDC CER 0+-30	28480	0160-4789
C11	0160-5298	8		CAPACITOR-FXD .01UF +-20% 100VDC CER	28480	0160-5298
C12	0160-5298	8		CAPACITOR-FXD .01UF +-20% 100VDC CER	28480	0160-5298
C13	0160-4789	0		CAPACITOR-FXD 15PF +-5% 100VDC CER 0+-30	28480	0160-4789
C14	0160-5298	8		CAPACITOR-FXD .01UF +-20% 100VDC CER	28480	0160-5298
CR1	1901-0025	2	1	DIODE-GEN PRP 100V 200MA DO-7	28480	1901-0025
J1	1251-8248	8	1	CONN-POST TYPE .100-PIN-SPCG 26-CONT	28480	1251-8248
JU501	1251-6524	9	1	SHUNT-DIP 9 POSITION; DUAL INLINE PKG	28480	1251-6524
Q1	1854-0477	7	1	TRANSISTOR NPN 2N2222A SI TO-18 PD=500MW	04713	2N2222A
R1	0757-0280	3	2	RESISTOR 1K 1% .125W F TC=0+-100	24546	C4-1/8-T0-1001-F
R2	0757-0280	3		RESISTOR 1K 1% .125W F TC=0+-100	24546	C4-1/8-T0-1001-F
R201	1810-0280	8	2	NETWORK-RES 10-SIP10.0K OHM X 9	01121	210A103
R202	1810-0206	8	1	NETWORK-RES 8-SIP10.0K OHM X 7	01121	208A103
R301	1810-0368	3	1	NETWORK-RES 6-SIP10.0K OHM X 5	01121	206A103
R501	1810-0280	8		NETWORK-RES 10-SIP10.0K OHM X 9	01121	210A103
R503	1810-0318	3	1	NETWORK-RES 6-SIP1.0K OHM X 5	01121	206A102
TP1	0360-1682	0	1	TERMINAL-STUD SGL-TUR PRESS-MTG	28480	0360-1682
U100	1820-1216	3	1	IC DCDR TTL LS 3-TO-8-LINE 3-INP	01295	SN74LS138N
U101	1820-2548	6	1	IC-TMS 9914	28480	1820-2548
U102	1820-3431	8	1	IC DS75160AN	28480	1820-3431
U200	1820-1568	8	1	IC BFR TTL LS BUS QUAD	01295	SN74LS125AN
U202	1820-2483	8	1	IC RCVR TTL LS BUS OCTL	01295	SN75161N
U300	1820-1858	9	2	IC FF TTL LS D-TYPE OCTL	01295	SN74LS377N
U301	1820-2977	5	1	IC-ROMLESS VERSION OF Z8601 MCU; FCLK=8M	28480	1820-2977
U302	18162-10001	0	1	HP IB PROM	28480	18162-10001
U400	1820-1997	7	1	IC FF TTL LS D-TYPE POS-EDGE-TRIG PRL-IN	01295	SN74LS374N
U500	1820-1440	5	1	IC LCH TTL LS QUAD	01295	SN74LS279N
U502	1820-1858	9		IC FF TTL LS D-TYPE OCTL	01295	SN74LS377N
U503	1820-1208	3	1	IC GATE TTL LS OR QUAD 2-INP	01295	SN74LS32N
U604	1820-1427	8	1	IC DCDR TTL LS 2-TO-4-LINE DUAL 2-INP	01295	SN74LS156N
XU302	1200-0567	1	1	SOCKET-IC 28-CONT DIP DIP-SLDR	28480	1200-0567
XU501	1200-0539	7	1	SOCKET-IC 18-CONT DIP DIP-SLDR	28480	1200-0539
Y1	0410-1298	1	1	CRYSTAL-QUARTZ 4 MHZ HC-18/U-HLDR	28480	0410-1298

See introduction to this section for ordering information
*Indicates factory selected value

Table 6-2. 4945A Replaceable Parts (Cont'd)

Reference Designation	HP Part Number	CD	Qty	Description	Mfr Code	Mfr Part Number
				18163A RS232 INTERFACE		
	18163-20001	2	1	RS 232 I/O BD BK	28480	18163-20001
	1251-2942	7	2	LOCK-SUBMIN D CONN	28480	1251-2942
	1390-0520	7	1	FASTENER-LATCH SPR SPRING LATCH	28480	1390-0520
	1480-0225	0	1	PIN-GRV .093-IN-DIA .312-IN-LG STL	28480	1480-0225
	2190-0913	9	6	WASHER-LK HLCL NO. 4 .115-IN-ID	28480	2190-0913
	2200-0097	3	12	SCREW-MACH 4-40 .562-IN-LG 82 DEG	00000	ORDER BY DESCRIPTION
	8120-4156	9	1	RS-232 INTFC CBL	28480	8120-4156
	5020-5258	9	6	SPCR THD 4-40	28480	5020-5258
	18162-00002	0	1	HOUSING PLATE	28480	18162-00002
	98046-64403	6	1	CASE-TOP PAINTED	28480	98046-64403
	98046-64404	7	1	CASE-BOT PAINTED	28480	98046-64404
	18163-00001	0	1	MOUNTING PLATE	28480	18163-00001
	18163-60001	6	2	RS-232 I/O ASSY	28480	18163-60001
	18163-80001	8	1	IDENT LBL RS232	28480	18163-80001
	18163-80003	0	1	SER TAG LABEL	28480	18163-80003
				18163-60001 RS-232 I/O ASSY		
C1	0180-0374	3	1	CAPACITOR-FXD 10UF+-10% 20VDC TA	56289	150D106X9020R2
C2	0180-2205	3	2	CAPACITOR-FXD .33UF+-10% 35VDC TA	56289	150D334X9035A2
C3	0180-2205	3		CAPACITOR-FXD .33UF+-10% 35VDC TA	56289	150D334X9035A2
C4	0180-1743	2	2	CAPACITOR-FXD .1UF+-10% 35VDC TA	56289	150D104X9035A2
C5	0180-1743	2		CAPACITOR-FXD .1UF+-10% 35VDC TA	56289	150D104X9035A2
C6	0160-5298	8	7	CAPACITOR-FXD .01UF +-20% 100VDC CER	28480	0160-5298
C7	0160-5298	8		CAPACITOR-FXD .01UF +-20% 100VDC CER	28480	0160-5298
C8	0160-5298	8		CAPACITOR-FXD .01UF +-20% 100VDC CER	28480	0160-5298
C9	0160-4810	8	3	CAPACITOR-FXD 330PF +-5% 100VDC CER	28480	0160-4810
C10	0160-4810	8		CAPACITOR-FXD 330PF +-5% 100VDC CER	28480	0160-4810
C11	0160-4810	8		CAPACITOR-FXD 330PF +-5% 100VDC CER	28480	0160-4810
C13	0160-5298	8		CAPACITOR-FXD .01UF +-20% 100VDC CER	28480	0160-5298
C14	0160-5298	8		CAPACITOR-FXD .01UF +-20% 100VDC CER	28480	0160-5298
C15	0160-5298	8		CAPACITOR-FXD .01UF +-20% 100VDC CER	28480	0160-5298
C16	0160-5298	8		CAPACITOR-FXD .01UF +-20% 100VDC CER	28480	0160-5298
C17	0160-4535	4	1	CAPACITOR-FXD 1UF +-10% 50VDC CER	28480	0160-4535
C18	0160-5298	8		CAPACITOR-FXD .01UF +-20% 100VDC CER	28480	0160-5298
C19	0160-5298	8		CAPACITOR-FXD .01UF +-20% 100VDC CER	28480	0160-5298
C20	0160-4789	0	2	CAPACITOR-FXD 15PF +-5% 100VDC CER 0+-30	28480	0160-4789
C21	0160-4789	0		CAPACITOR-FXD 15PF +-5% 100VDC CER 0+-30	28480	0160-4789
CR1	1901-0033	2	2	DIODE-GEN PRP 180V 200MA DO-7	28480	1901-0033
CR2	1901-0033	2		DIODE-GEN PRP 180V 200MA DO-7	28480	1901-0033
CR3	1901-0025	2	1	DIODE-GEN PRP 100V 200MA DO-7	28480	1901-0025
JU201	1251-6524	9	1	SHUNT-DIP 9 POSITION; DUAL INLINE PKG	28480	1251-6524
P1	1251-8248	8	1	CONN-POST TYPE .100-PIN-SPCG 26-CONT	28480	1251-8248
Q1	1854-0477	7	1	TRANSISTOR NPN 2N2222A SI TO-18 PD=500MW	04713	2N2222A
R1	0757-0280	3	2	RESISTOR 1K 1% .125W F TC=0+-100	24546	C4-1/8-T0-1001-F
R2	0757-0280	3		RESISTOR 1K 1% .125W F TC=0+-100	24546	C4-1/8-T0-1001-F
R201	1810-0280	8	2	NETWORK-RES 10-SIP10.0K OHM X 9	01121	210A103
R202	1810-0280	8		NETWORK-RES 10-SIP10.0K OHM X 9	01121	210A103
R502	1810-0368	3	2	NETWORK-RES 6-SIP10.0K OHM X 5	01121	206A103
R603	1810-0318	3	1	NETWORK-RES 6-SIP1.0K OHM X 5	01121	206A102
R604	1810-0368	3		NETWORK-RES 6-SIP10.0K OHM X 5	01121	206A103
TP1	0360-1682	0	1	TERMINAL-STUD SGL-TUR PRESS-MTG	28480	0360-1682
U100	1826-0275	4	1	IC 78L12A V RGLTR TO-92	04713	MC78L12ACP
U101	1826-0282	3	1	IC V RGLTR TO-92	04713	MC79L12ACP
U102	1820-2665	8	1	IC-ASYNCHRONOUS COMMUNICATIONS ELEMENT	28480	1820-2665
U103	1820-0509	5	1	IC DRVR DTL LINE DRVR QUAD	04713	MC1488L
U200	1820-1568	8	1	IC BFR TTL LS BUS QUAD	01295	SN74LS125AN
U202	1818-0643	3	1	IC NMOS 4096 (4K) STAT RAM 450-NS 3-S	27014	MM2114N-L
U203	1820-0990	8	1	IC RCVR DTL NAND LINE QUAD	01295	SN75189AJ
U300	1820-1216	3	1	IC DCDR TTL LS 3-TO-8-LINE 3-INP	01295	SN74LS138N
U303	1820-1858	9	2	IC FF TTL LS D-TYPE OCTL	01295	SN74LS377N
U400	1820-1858	9		IC FF TTL LS D-TYPE OCTL	01295	SN74LS377N
U403	18163-10001	1	1	RS232 PROM	28480	18163-10001
U407	1820-2977	5	1	IC-ROMLESS VERSION OF Z8601 MCU; FCLK=8M	28480	1820-2977
U500	1820-1997	7	1	IC FF TTL LS D-TYPE POS-EDGE-TRIG PRL-IN	01295	SN74LS374N
U501	1820-1440	5	1	IC LCH TTL LS QUAD	01295	SN74LS279N
U502	1820-1427	8	1	IC DCDR TTL LS 2-TO-4-LINE DUAL 2-INP	01295	SN74LS156N
U503	1820-1208	3	1	IC GATE TTL LS OR QUAD 2-INP	01295	SN74LS32N
U504	1820-1199	1	1	IC INV TTL LS HEX 1-INP	01295	SN74LS04N

See introduction to this section for ordering information
*Indicates factory selected value

Table 6-2. 4945A Replaceable Parts (Cont'd)

Reference Designation	HP Part Number	C D	Qty	Description	Mfr Code	Mfr Part Number
XU201	1200-0539	7	2	SOCKET-IC 18-CONT DIP DIP-SLDR	28480	1200-0539
XU202	1200-0539	7		SOCKET-IC 18-CONT DIP DIP-SLDR	28480	1200-0539
XU403	1200-0567	1	1	SOCKET-IC 28-CONT DIP DIP-SLDR	28480	1200-0567
Y1	0410-1298	1	1	CRYSTAL-QUARTZ 4 MHZ HC-18/U-HLDR	28480	0410-1298

See introduction to this section for ordering information
*Indicates factory selected value

Table 6-2. 4945A Replaceable Parts (Cont'd)

Reference Designation	HP Part Number	CD	Qty	Description	Mfr Code	Mfr Part Number
				18166A HP-IL INTERFACE		
	0624-0227	7	2	SCREW-TPG 4-40 .25-IN-LG PAN-HD-POZI STL	00000	ORDER BY DESCRIPTION
	1390-0520	7	1	FASTENER-LATCH SPR SPRING LATCH	28480	1390-0520
	1480-0225	0	1	PIN-GRV .093-IN-DIA .312-IN-LG STL	28480	1480-0225
	2190-0913	9	6	WASHER-LK HLCL NO. 4 .115-IN-ID	28480	2190-0913
	2200-0097	3	12	SCREW-MACH 4-40 .562-IN-LG 82 DEG	00000	ORDER BY DESCRIPTION
	8120-3383	2	1	CA-ASSY HP-IL 1M	28480	8120-3383
	5020-5258	9	6	SPCR THD 4-40	28480	5020-5258
	00075-60049	8	1	PNL RECEPT HP-IL	28480	00075-60049
	18162-00002	0	1	HOUSING PLATE	28480	18162-00002
	98046-64403	6	1	CASE-TOP PAINTED	28480	98046-64403
	98046-64404	7	1	CASE-BOT PAINTED	28480	98046-64404
	18165-00001	2	1	MOUNTING PLATE	28480	18165-00001
	18165-00002	3	1	MOUNTING BRACKET	28480	18165-00002
	18165-60001	8	2	HP IL I/O ASSY	28480	18165-60001
	18165-80001	0	1	IDENT LABEL HPIL	28480	18165-80001
	18165-80003	2	1	SER TAG LABEL	28480	18165-80003
	18165-60001			HP IL I/O ASSY		
C1	0160-5298	8	6	CAPACITOR-FXD .01UF +-20% 100VDC CER	28480	0160-5298
C2	0160-5332	1	1	CAPACITOR-FXD .1UF +-20% 50VDC CER	28480	0160-5332
C3	0160-4800	6	1	CAPACITOR-FXD 120PF +-5% 100VDC CER	28480	0160-4800
C4	0160-4810	8	2	CAPACITOR-FXD 330PF +-5% 100VDC CER	28480	0160-4810
C5	0160-4810	8		CAPACITOR-FXD 330PF +-5% 100VDC CER	28480	0160-4810
C6	0180-0374	3	1	CAPACITOR-FXD 10UF+-10% 20VDC TA	56289	150D106X9020B2
C7	0160-5298	8		CAPACITOR-FXD .01UF +-20% 100VDC CER	28480	0160-5298
C8	0160-5298	8		CAPACITOR-FXD .01UF +-20% 100VDC CER	28480	0160-5298
C9	0160-5298	8		CAPACITOR-FXD .01UF +-20% 100VDC CER	28480	0160-5298
C10	0160-4789	0	2	CAPACITOR-FXD 15PF +-5% 100VDC CER 0+-30	28480	0160-4789
C11	0160-4789	0		CAPACITOR-FXD 15PF +-5% 100VDC CER 0+-30	28480	0160-4789
C12	0160-4535	4	1	CAPACITOR-FXD 1UF +-10% 50VDC CER	28480	0160-4535
C13	0160-5298	8		CAPACITOR-FXD .01UF +-20% 100VDC CER	28480	0160-5298
C14	0160-5298	8		CAPACITOR-FXD .01UF +-20% 100VDC CER	28480	0160-5298
CR1	1902-0970	8	2	DIODE-ZNR 33V 5% DO-35 PD=.4W TC=+.097%	28480	1902-0970
CR2	1902-0970	8		DIODE-ZNR 33V 5% DO-35 PD=.4W TC=+.097%	28480	1902-0970
CR3	1902-0953	7	2	DIODE-ZNR 6.2V 5% DO-35 PD=.4W TC=+.053%	28480	1902-0953
CR4	1902-0953	7		DIODE-ZNR 6.2V 5% DO-35 PD=.4W TC=+.053%	28480	1902-0953
CR5	1901-0025	2	1	DIODE-GEN PRP 100V 200MA DO-7	28480	1901-0025
JU403	1251-6524	9	1	SHUNT-DIP 9 POSITION; DUAL INLINE PKG	28480	1251-6524
L1	9100-1631	8	1	INDUCTOR RF-CH-MLD 56UH 5% .166DX.385LG	28480	9100-1631
Q1	1854-0477	7	1	TRANSISTOR NPN 2N2222A SI TO-18 PD=500MW	04713	2N2222A
R1	1810-0280	8	2	NETWORK-RES 10-SIP10.0K OHM X 9	01121	210A103
R2	0757-0280	3	2	RESISTOR 1K 1% .125W F TC=0+-100	24546	C4-1/8-T0-1001-F
R3	0757-0280	3		RESISTOR 1K 1% .125W F TC=0+-100	24546	C4-1/8-T0-1001-F
R4	8159-0005	0	1	RESISTOR-ZERO OHMS 22 AWG LEAD DIA	28480	8159-0005
R5	0683-1535	6	2	RESISTOR 15K 5% .25W FC TC=-400/+800	01121	CB1535
R6	0683-1535	6		RESISTOR 15K 5% .25W FC TC=-400/+800	01121	CB1535
R7	1810-0318	3	1	NETWORK-RES 6-SIP1.0K OHM X 5	01121	206A102
R8	0698-3446	3	2	RESISTOR 383 1% .125W F TC=0+-100	24546	C4-1/8-T0-383R-F
R9	0698-3446	3		RESISTOR 383 1% .125W F TC=0+-100	24546	C4-1/8-T0-383R-F
R10	1810-0280	8		NETWORK-RES 10-SIP10.0K OHM X 9	01121	210A103
R11	1810-0206	8	1	NETWORK-RES 8-SIP10.0K OHM X 7	01121	208A103
T1	9100-4226	3	1	TRANSFORMER	28480	9100-4226
TP1	0360-1682	0	1	TERMINAL-STUD SGL-TUR PRESS-MTG	28480	0360-1682
U100	1820-1216	3	1	IC DCDR TTL LS 3-TO-8-LINE 3-INP	01295	SN74LS138N
U101	1820-2927	5	1	IC-1LB3-0003	28480	1820-2927
U200	1820-1440	5	1	IC LCH TTL LS QUAD	01295	SN74LS279N
U300	1820-1568	8	1	IC BFR TTL LS BUS QUAD	01295	SN74LS125AN
U301	18165-10001	3	1	HP-IL PROM	28480	18165-10001
U302	1820-1427	8	1	IC DCDR TTL LS 2-TO-4-LINE DUAL 2-INP	01295	SN74LS156N
U400	1820-1997	7	1	IC FF TTL LS D-TYPE POS-EDGE-TRIG PRL-IN	01295	SN74LS374N
U500	1820-1858	9	2	IC FF TTL LS D-TYPE OCTL	01295	SN74LS377N
U501	1820-2977	5	1	IC-ROMLESS VERSION OF Z8601 MCU; FCLK=8M	28480	1820-2977
U503	1820-1858	9		IC FF TTL LS D-TYPE OCTL	01295	SN74LS377N
U504	1820-1208	3	1	IC GATE TTL LS OR QUAD 2-INP	01295	SN74LS32N
XU301	1200-0567	1	1	SOCKET-IC 28-CONT DIP DIP-SLDR	28480	1200-0567
XU403	1200-0539	7	1	SOCKET-IC 18-CONT DIP DIP-SLDR	28480	1200-0539
Y1	0410-1298	1	1	CRYSTAL-QUARTZ 4 MHZ HC-18/U-HLDR	28480	0410-1298

See introduction to this section for ordering information
*Indicates factory selected value

Table 6-2. 4945A Replaceable Parts (Cont'd)

Reference Designation	HP Part Number	C D	Qty	Description	Mfr Code	Mfr Part Number
	04945-62607	**9**	**1**	**4945A SERVICE KIT**	**28480**	**04945-62607**
	9211-4142	7	1	CARTON	28480	9211-4142
	9220-3880	7	1	FOAM PAD SET	28480	9220-3880
	04945-60023	9	1	50 PIN EXTENDER BOARD	28480	04945-60023
	04945-60024	0	1	120 PIN EXTENDER BOARD	28480	04945-60024
	04945-60062	6	1	PASSIVE LOADING BOARD	28480	04945-60062
	04945-62608	0	1	POWER SUPPLY TEST FIXTURE	28480	04945-62608
A58	**04945-60058**	**0**	**1**	**FR PANEL CONNECT**	**28480**	**04945-60058**
A58CR1	1901-0040	1	2	DIODE-SWITCHING 30V 50MA 2NS DO-35	28480	1901-0040
A58CR2	1901-0040	1		DIODE-SWITCHING 30V 50MA 2NS DO-35	28480	1901-0040
A58J1	1251-8311	6	1	CONNECTOR 12-PIN F FLAT CABLE	28480	1251-8311
A58K1	0490-1354	8	2	RELAY 2C 5VDC-COIL 2A 250VAC	28480	0490-1354
A58K2	0490-1354	8		RELAY 2C 5VDC-COIL 2A 250VAC	28480	0490-1354
A58V1	1970-0078	0		TUBE-ELECTRON SURGE V PTCTR	25088	B1-A350/15
A58V2	1970-0078	0		TUBE-ELECTRON SURGE V PTCTR	25088	B1-A350/15
A58V3	1970-0078	0		TUBE-ELECTRON SURGE V PTCTR	25088	B1-A350/15
A58V4	1970-0078	0		TUBE-ELECTRON SURGE V PTCTR	25088	B1-A350/15
A58V5	1970-0078	0		TUBE-ELECTRON SURGE V PTCTR	25088	B1-A350/15
A58V6	1970-0078	0		TUBE-ELECTRON SURGE V PTCTR	25088	B1-A350/15
	0362-0150	9	1	TERMINAL-CRIMP R-TNG #8 22-16-AWG RED	28480	0362-0150
	1400-0249	0	1	CABLE TIE .062-.625-DIA .091-WD NYL	06383	PLT1M-8
	1970-0078	0	7	TUBE-ELECTRON SURGE V PTCTR	25088	B1-A350/15
	04945-20058	6	1	FR CONN BD BLK	28480	04945-20058
A59	**04945-60059**	**1**	**1**	**REAR PANEL CONNECT**	**28480**	**04945-60059**
A59H1	2190-0016	3	2	WASHER-LK INTL T 3/8 IN .377-IN-ID	28480	2190-0016
A59H2	2190-0016	3		WASHER-LK INTL T 3/8 IN .377-IN-ID	28480	2190-0016
A59H3	2950-0043	8	2	NUT-HEX-DBL-CHAM 3/8-32-THD .094-IN-THK	00000	ORDER BY DESCRIPTION
A59H4	2950-0043	8		NUT-HEX-DBL-CHAM 3/8-32-THD .094-IN-THK	00000	ORDER BY DESCRIPTION
A59H5	0340-0732	7	2	INSULATOR-BDG POST POLYC	28480	0340-0732
A59H6	0340-0732	7		INSULATOR-BDG POST POLYC	28480	0340-0732
A59H7	0340-0719	0	2	INSULATOR-BDG POST ABS JADE-GRA	28480	0340-0719
A59H8	0340-0719	0		INSULATOR-BDG POST ABS JADE-GRA	28480	0340-0719
A59H9	3050-0227	3	2	WASHER-FL MTLC NO. 6 .149-IN-ID	28480	3050-0227
A59H10	3050-0227	3		WASHER-FL MTLC NO. 6 .149-IN-ID	28480	3050-0227
A59H11	2420-0023	1	2	NUT-HEX-W/LKWR 6-32-THD .109-IN-THK	28480	2420-0023
A59H12	2420-0023	1		NUT-HEX-W/LKWR 6-32-THD .109-IN-THK	28480	2420-0023
A59H13	2200-0103	2	2	SCREW-MACH 4-40 .25-IN-LG PAN-HD-POZI	28480	2200-0103
A59H14	2200-0103	2		SCREW-MACH 4-40 .25-IN-LG PAN-HD-POZI	28480	2200-0103
A59J1	1250-0083	1	2	CONNECTOR-RF BNC FEM SGL-HOLE-FR 50-OHM	28480	1250-0083
A59J2	1250-0083	1		CONNECTOR-RF BNC FEM SGL-HOLE-FR 50-OHM	28480	1250-0083
A59J3	1510-0076	4	2	BINDING POST SGL SGL-TUR JCK	28480	1510-0076
A59J4	1510-0076	4		BINDING POST SGL SGL-TUR JCK	28480	1510-0076
A59MP1	1400-0498	1	2	BRACKET-RTANG .312-LG X .452-LG .25-WD	28480	1400-0498
A59MP2	1400-0498	1		BRACKET-RTANG .312-LG X .452-LG .25-WD	28480	1400-0498
A59MP3	0361-0010	8	2	RIVET-AL .123D X .219L	28480	0361-0010
A59MP4	0361-0010	8		RIVET-AL .123D X .219L	28480	0361-0010
A59MP5	3050-0105	6	2	WASHER-FL MTLC NO. 4 .125-IN-ID	28480	3050-0105
A59MP6	3050-0105	6		WASHER-FL MTLC NO. 4 .125-IN-ID	28480	3050-0105
	8151-0013	4	1	WIRE 22AWG 1X22	28480	8151-0013
	04945-00021	1	1	I/O COVER-LEFT	28480	04945-00021
	04945-60062	**6**	**1**	**PASSIVE LOAD BOARD**	**28480**	**04945-60062**
	0360-1682	0	8	TERMINAL-STUD SGL-TUR PRESS-MTG	28480	0360-1682
	0380-0159	6	4	STANDOFF-RVT-ON .375-IN-LG 6-32THD	00000	ORDER BY DESCRIPTION
	0811-1893	2	2	RESISTOR 5 5% 10W PW TC=0+-50	20480	0811-1893
	0811-2988	8	4	RESISTOR 22 1% 7W PW TC=0+-20	91637	NS7-22R-F
	1251-7506	9	1	CONN-POST TYPE .100-PIN-SPCG 120-CONT	28480	1251-7506
	1251-7986	9	1	CONN-POST TYPE .100-PIN-SPCG 50-CONT	20480	1251-7986

See introduction to this section for ordering information
*Indicates factory selected value

Table 6-2. 4945A Replaceable Parts (Cont'd)

Reference Designation	HP Part Number	C D	Qty	Description	Mfr Code	Mfr Part Number
	04945-60061	**5**	**1**	**POWER SUPPLY TEST BOARD**	**28480**	**04945-60061**
	0360-1682	0	13	TERMINAL-STUD SGL-TUR PRESS-MTG	28480	0360-1682
	0380-0741	2	8	STANDOFF-RVT-ON .187-IN-LG 6-32THD	00000	ORDER BY DESCRIPTION
	0380-1276	0	3	SPACER-SNAP-IN .188 IN LG; .280 IN OD	00000	ORDER BY DESCRIPTION
	0811-1893	2	4	RESISTOR 5 5% 10W PW TC=0+-50	28480	0811-1893
	0811-2568	0	5	RESISTOR 1 1% 3W PW TC=0+-50	28480	0811-2568
	0811-2988	8	4	RESISTOR 22 1% 7W PW TC=0+-20	91637	NS7-22R-F
	0812-0099	0	2	RESISTOR 1K 5% 5W PW TC=0+-20	28480	0812-0099
	0816-0010	3	4	RESISTOR 12 5% 10W PW TC=0+-260	91637	HL12-02Z-13W-12R-J
	0890-0305	5	1	TUBING-HS .25-D/.125-RCVD .025-WALL PVC	00000	ORDER BY DESCRIPTION
	1251-2875	5	1	CONNECTOR-PC EDGE 22-CONT/ROW 2-ROWS	28480	1251-2875
	1251-3917	8	1	CONNECTOR 2-PIN M POST TYPE	28480	1251-3917
	1400-0249	0	3	CABLE TIE .062-.625-DIA .091-WD NYL	06383	PLT1M-8
	8120-4109	2	1	CABLE-FLEX 22 AWG 5-CNDCT GRA-JKT	28480	8120-4109
	04945-62608	**0**	**1**	**POWER SUPPLY TEST FIXTURE**	**28480**	**04945-62608**
	0360-0009	3	1	SOLDER LUG TERMINAL	28480	0360-0009
	0403-0179	0	4	PLASTIC BUMPER	28480	0403-0179
	2110-0304	4	1	FUSE 1.5A 250V TD 1.25X.25 UL	28480	2110-0304
	2110-0360	2	1	FUSE .75A 250V TD 1.25X.25 UL	75915	313.750
	2110-0564	8	2	FUSEHOLDER BODY 12A MAX FOR UL	H9027	031.1657
	2110-0565	9	2	FUSEHOLDER CAP 12A MAX FOR UL	28480	2110-0565
	2110-0569	3	2	FUSEHOLDER COMPONENT NUT; THREAD M12.7	28480	2110-0569
	2110-0558	0	2	FUSE 1A 500V 1.5X.406 UL	71400	FNQ1
	2200-0105	4	4	SCREW-MACH 4-40 .312-IN-LG PAN-HD-POZI	00000	ORDER BY DESCRIPTION
	2260-0009	3	4	NUT-HEX-W/LKWR 4-40-THD .094-IN-THK	00000	ORDER BY DESCRIPTION
	2360-0113	2	27	SCREW-MACH 6-32 .25-IN-LG PAN-HD-POZI	00000	ORDER BY DESCRIPTION
	2420-0023	1	2	NUT-HEX-W/LKWR 6-32-THD .109-IN-THK	28480	2420-0023
	3101-2299	2	1	SWITCH-SL DPDT STD 5A 250VAC SLDR-LUG	28480	3101-2299
	04945-00023	3	1	CHASSIS	28480	04945-00023
	04945-00024	4	1	COVER	28480	04945-00024
	04945-00025	5	1	FRONT PANEL	28480	04945-00025
	04945-60061	5	1	POWER SUPPLY TEST BOARD	28480	04945-60061
	04945-61614	6	1	LINE FILTER	28480	04945-61614
	04945-60023	**9**	**1**	**50 PIN EXTENDER BOARD**	**28480**	**04945-60023**
	0360-0124	3	1	CONNECTOR-SGL CONT PIN .04-IN-BSC-SZ RND	28480	0360-0124
	0403-0470	4	2	EXTENDER-PC BOARD SUPPORT FOR .062 IN	28480	0403-0470
	1251-7986	9	1	CONN-POST TYPE .100-PIN-SPCG 50-CONT	28480	1251-7986
	1251-8098	6	1	CONN-POST TYPE .100-PIN-SPCG 50-CONT	28480	1251-8098
	1480-0136	2	4	PIN-ROLL .094-IN-DIA .25-IN-LG SST	28480	1480-0136
	04945-60024	**0**	**1**	**120 PIN EXTENDER BOARD**	**28480**	**04945-60024**
	0360-0124	3	2	CONNECTOR-SGL CONT PIN .04-IN-BSC-SZ RND	28480	0360-0124
	0403-0470	4	2	EXTENDER-PC BOARD SUPPORT FOR .062 IN	28480	0403-0470
	1251-7506	9	1	CONN-POST TYPE .100-PIN-SPCG 120-CONT	28480	1251-7506
	1251-7518	3	1	CONN-POST TYPE .100-PIN-SPCG 120-CONT	28480	1251-7518
	1480-0136	2	4	PIN-ROLL .094-IN-DIA .25-IN-LG SST	28480	1480-0136

See introduction to this section for ordering information
*Indicates factory selected value

Table 6-3 List of Manufacturers' Codes

MRF NO.	MANUFACTURER NAME	ADDRESS		ZIP CODE
H9027	SCHURTER A G H	LUZERN	SW	
S4013	HITACHI	TOKYO	JP	
00000	ANY SATISFACTORY SUPPLIER			
01121	ALLEN-BRADLEY CO	MILWAUKEE	WI	53204
01295	TEXAS INSTRU INC SEMICOND CMPNT DIV	DALLAS	TX	75222
02111	SPECTROL ELECTRONICS CORP	CITY OF IND	CA	91745
03888	K D I PYROFILM CORP	WHIPPANY	NJ	07981
03911	CLAIREX CORP	MT VERNON	NY	10050
04713	MOTOROLA SEMICONDUCTOR PRODUCTS	PHOENIX	AZ	85005
05820	WAKEFIELD ENGINEERING INC	WAKEFIELD	MA	01880
06383	PANDUIT CORP	TINLEY PARK	IL	60477
06665	PRECISION MONOLITHICS INC	SANTA CLARA	CA	95050
07933	RAYTHEON CO SEMICONDUCTOR DIV HQ	MOUNTAIN VIEW	CA	94040
08806	GE CO MINIATURE LAMP PROD DEPT	CLEVELAND	OH	44112
11236	CTS OF BERNE INC	BERNE	IN	46711
12969	UNITRODE CORP	WATERTOWN	MA	02172
16299	CORNING GLASS WKKS COMPONENT DIV	RALEIGH	NC	27604
17856	SILICONIX INC	SANTA CLARA	CA	95054
18324	SIGNETICS CORP	SUNNYDALE	CA	94086
19701	MEPCO/ELECTRA CORP	MINERAL WELLS	TX	76067
22526	BERG ELEK DIV DUPONT	NEW CUMBERLAND	PA	17070
24355	ANALOG DEVICES INC	NORWOOD	MA	02062
24546	CORNING GLASS WORKS (BRADFORD)	BRADFORD	PA	16701
24972	AEG-TELEFUNKEN CORP	ENGLEWOOD	NJ	07632
25088	SIEMENS CORP	ISELIN	NJ	08830
27014	NATIONAL SEMICONDUCTOR CORP	SANTA CLARA	CA	95051
27167	CORNING GLASS WORKS (WILMINGTON)	WILMINGTON	NC	28401
28480	HEWLETT-PACKARD CO CORPORATE HQ	PALO ALTO	CA	94304
3L585	RCA CORP SOLID STATE DIV	SOMERVILLE	NJ	
32293	INTERSIL INC	CUPERTINO	CA	95014
34335	ADVANCED MICRO DEVICES INC	SUNNYVALE	CA	94086
34371	HARRIS SEMICON DIV HARRIS-INTERTYPE	MELBOURNE	FL	32901
50088	MOSTEK CORP	CARROLLTON	TX	75006
51642	CENTRE ENGINEERING INC	STATE COLLEGE	PA	16801
56289	SPRAGUE ELECTRIC CO	NORTH ADAMS	MA	01247
71400	BUSSMAN MFG DIV OF MCGRAW-EDISON CO	ST LOUIS	MO	63107
72136	ELECTRO MOTIVE CORP	FLORENCE	SC	06226
75042	TRW INC PHILADELPHIA DIV	PHILADELPHIA	PA	19108
75915	LITTELFUSE INC	DES PLAINES	IL	60016
76381	3M COMPANY	ST PAUL	MN	55101
84411	TRW CAPACITOR DIV	OGALLALA	NE	69153
91637	DALE ELECTRONICS INC	COLUMBUS	OH	68601
98291	SEALECTRO CORP	MAMARONECK	NY	10544

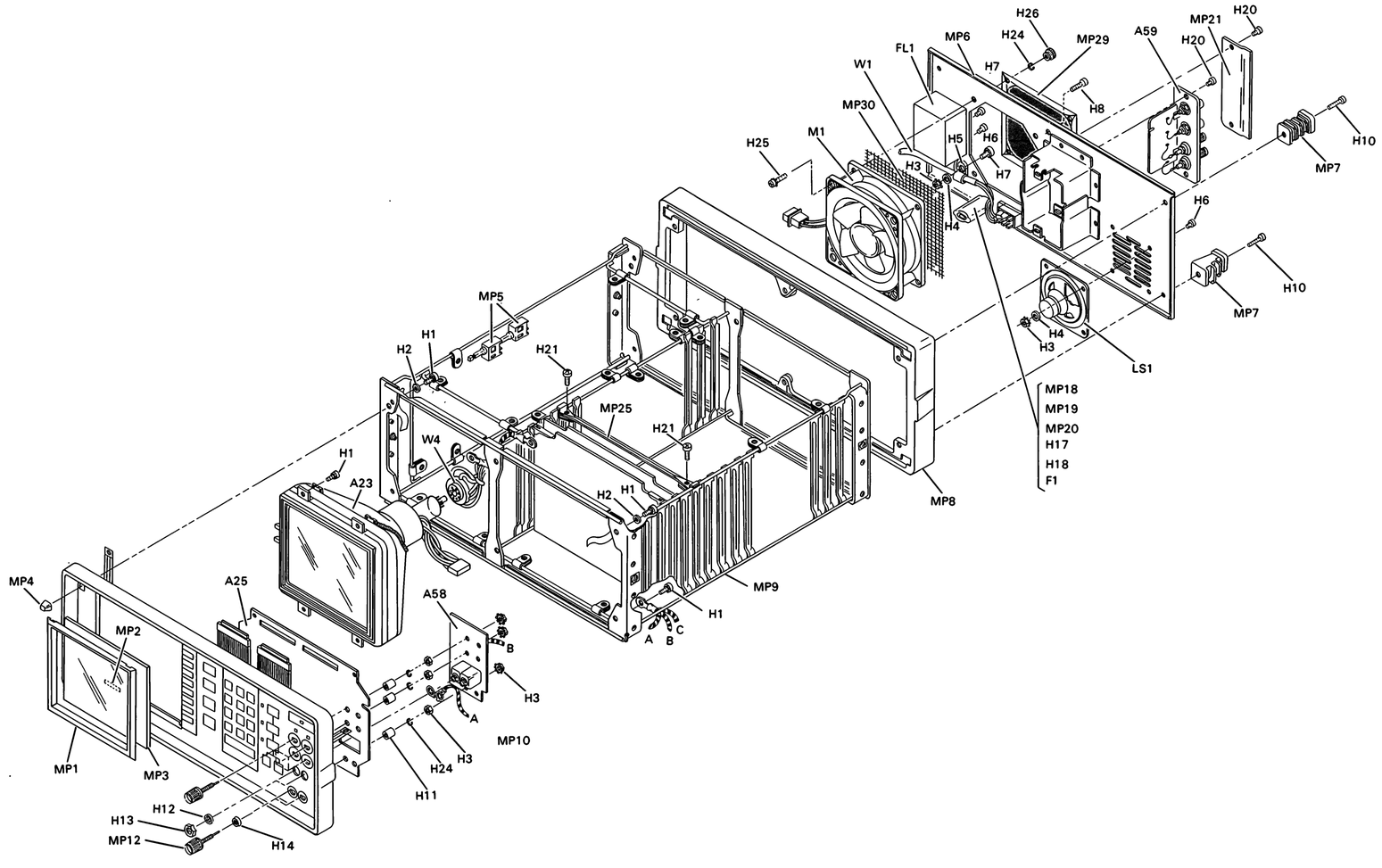

Figure 6-7. 4945A Chassis Parts

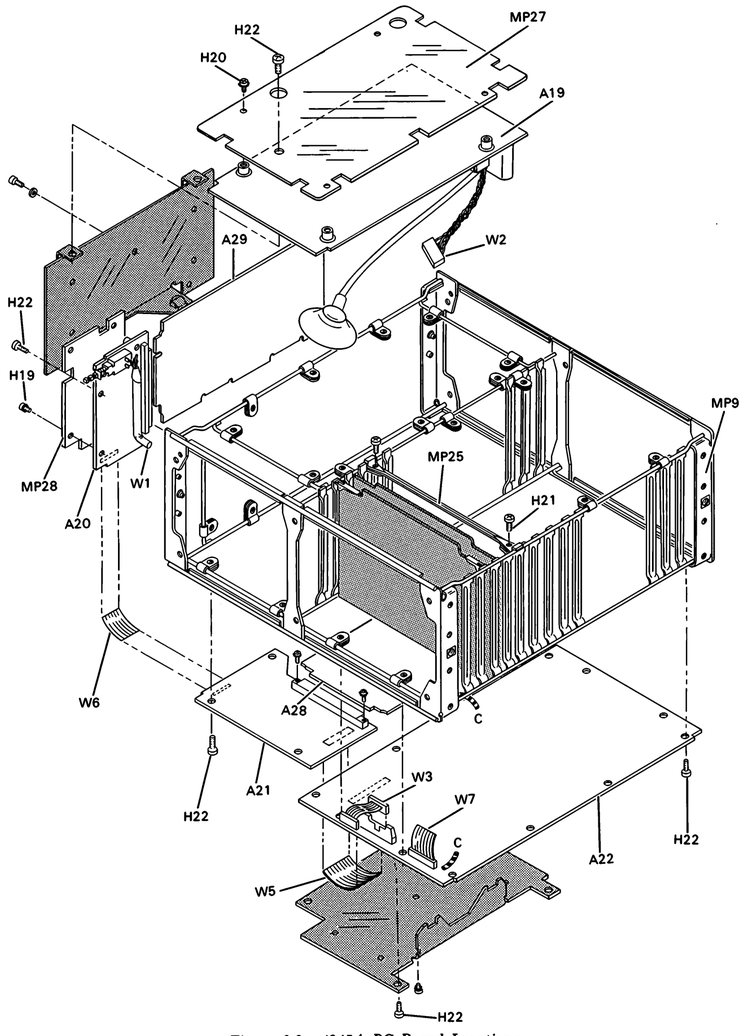

Figure 6-8. 4945A PC Board Locations

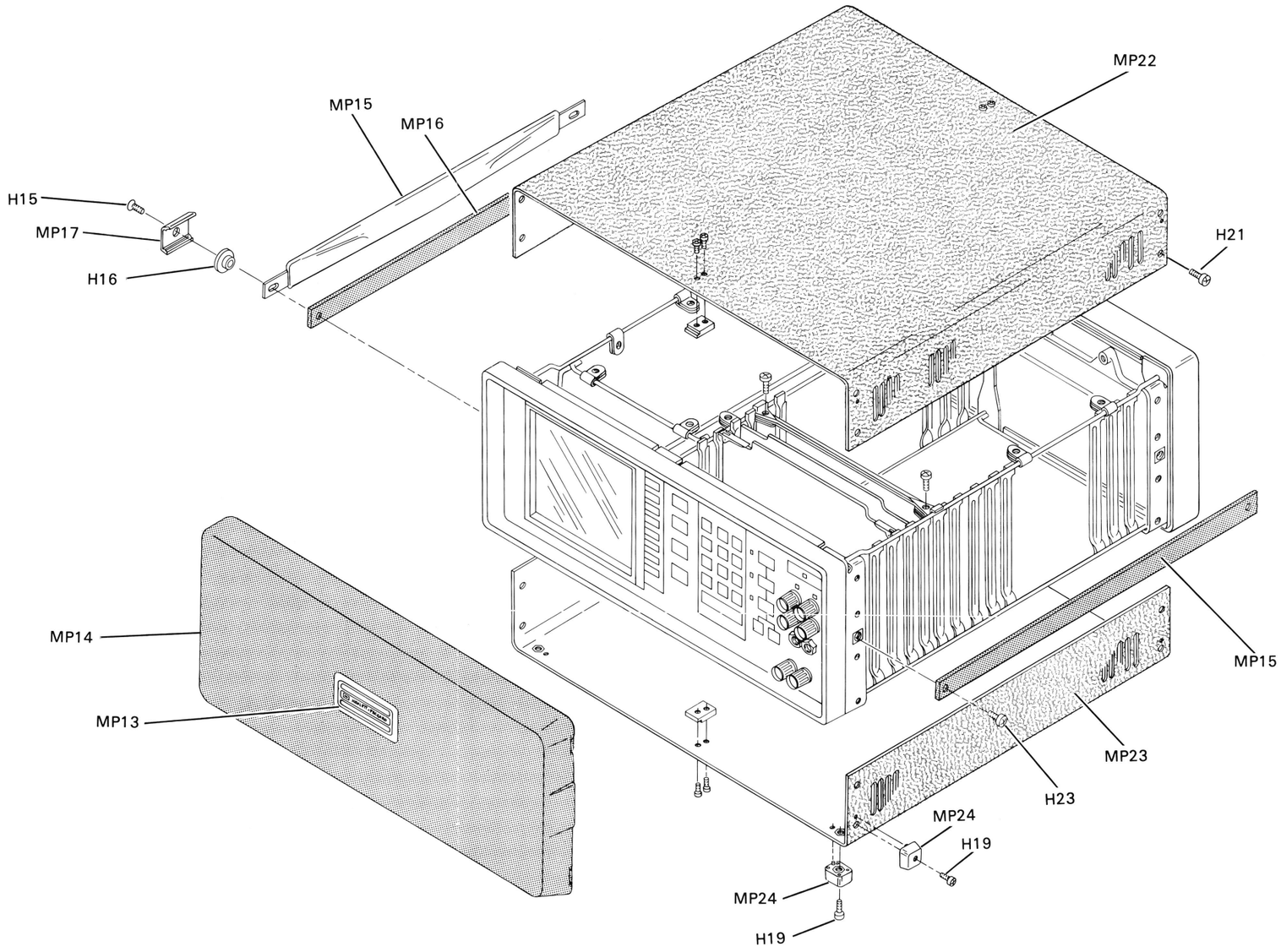

Figure 6-9. 4945A Covers

SECTION VII
MANUAL CHANGES

7-1. INTRODUCTION

Because this is a new instrument manual, no change information is needed.

HEWLETT PACKARD

MANUAL CHANGES

MANUAL DESCRIPTION	
INSTRUMENT:	4945A
SERIAL PREFIX:	2344A
DATE PRINTED:	NOVEMBER 1983
HP PART NO:	5957-4423-D
MICROFICHE NO:	5957-4424

CHANGE DATE 15 FEBRUARY 1984

(This change supersedes all earlier dated changes)

* Make all changes listed as ERRATA.

* Check the following table for your instrument's serial prefix or serial number and make listed change(s) to manual.

If your Instrument has serial prefix or serial number	Make these changes to your manual	If your instrument has serial prefix or serial number	Make these changes to your manual
2406A *	1		
2407A	1,2		

* SEE PAGE 22

▶ NEW ITEM

ERRATA

Table of Contents. Page viii, SECTION VIII: SERVICE

Change: 8-18. Interface Troubleshooting.....

from: page 8-80 to: page 8-79

SECTION 1 ERRATA:

Section 1. Page 1-8, SIGNAL-TO-NOISE MEASUREMENTS

Change: Ratio Range from: 10 db to 45 db

to: 10 db to 40 db

Section 1. Page 1-9, INTERMODULATION DISTORTION MEASUREMENT

Change: Distortion Range

from: 10 db to 70 db (not specified at 135 ohms)

to: 10 db to 55 db (not specified at 135 ohms)

Section 1. Page 1-10, PHASE AND AMPLITUDE JITTER MEASUREMENTS

Change: Receiver Accuracy to read as follows:

Phase: +- 5 % of measured value plus +- 0.5 deg pk to pk.
Amplitude: +- 5% of measured value plus +- 0.5% pk.
(for received tone of 990 to 1030 Hz, -40 to +10 dBm)

Section 1. Page 1-11, TRANSIENTS MEASUREMENTS cont'd

Change: Phase Hits

from: Threshold Level: 5 to 45 degrees in 5 degree steps

to: Threshold Level: 5 to 45 degrees in 5 degree steps (Hit Guard Interval : Nominal 4 msec.)

Reference: 4945A set for Impulse Threshold <= 90 dBrn

Change: Gain Hits

from: Threshold Range: 2 to 10 db in 1 db steps

to: Threshold Range: 2 to 10 db in 1 db steps (Hit Guard Interval : Nominal 4 msec.)

Reference: 4945A set for Impulse Threshold <= 90dBrn

Change: Dropouts

from: Duration: >= 4 milliseconds, +- 10%

to: Duration: Nominal 4 msec.

Reference: 4945A set for Impulse Threshold <= 90 dBrn

▶ SECTION 4 ERRATA:

Section 4-4. Transmitter Level and Frequency Test

Replace pages 4-3/4-4 with the attached pages located at rear of change sheet.

Replace pages 4-5/4-6 with the attached pages located at rear of change sheet.

▶ SECTION 5 ERRATA:

Section 5-5. Page 5-5, +V1 Adjustment (+5 Volt)

Change step 2 of +5 CLN Adjust to read as follows:

2. Carefully use a short adjustment tool to reach the A28 V1 adjustment from the top of the 4945A. Adjust V1 on A28 (R37) for +5 volts +-.01 volts.

   CAUTION: Hazardous voltages are present on the power supply and display driver boards.

SECTIONS 6 AND 8 ERRATA:

A1 ASSEMBLY ERRATA:

Section 6. Page 6-18, Table 6-2.4945A REPLACEABLE PARTS

Change: A1R57 and A1R58 to read as follows:

0698-8310 CD = 0 RESISTOR- FIXED 472K .1% .125W MFR CODE= 02995
MFR PN= 5033R

Section 8. Page 8-251, Figure 8-25. A1 RECEIVER INPUT SCHEMATIC DIAGRAM

Change: R57 and R58 (center of schematic)

from: 511K to: 472K

Section 6. Page 6-19, Table 6-2.4945A REPLACEABLE PARTS

Change: A1R67 to read as follows:

0698-8775 CD= 1 RESISTOR-FIXED 2.37K .1% .125W
MFR CODE= 02995 MFR PN= 5033R

Section 8. Page 8-251, Figure 8-25. A1 RECEIVER INPUT SCHEMATIC DIAGRAM

Change: R67 (center of schematic)

from: 2.61K to: 2.37K

Section 6. Page 6-19, Table 6-2. 4945A REPLACEABLE PARTS

Change: A1U803 to read as follows:

1826-0982 CD=0 IC LINEAR OP AMP-LOW-NOISE
MFR CODE= 02180 MFR PN= OP37GZ

A2 ASSEMBLY ERRATA:

Section 6. Page 6-23, Table 6-2. 4945A REPLACEABLE PARTS

Delete: HP Part Number 5040-6067 and associated information

▶ Add: HP Part Number 4040-0747 CD = 2 Qty = 2 EXTR-PC BD GRA POLYC.
.062-BD-THKNS MFR Code = 28480 Mfr PN = 4047-0747

A3 ASSEMBLY ERRATA:

Section 6. Page 6-26, Table 6-2. 4945A REPLACEABLE PARTS

Change: A3R36 to read as follows:

8159-0005 CD=0 Qty= 1 RESISTOR- ZERO OHMS

Section 8. Page 8-265, Figure 8-29. A3 MODEM SCHEMATIC DIAGRAM (SHEET 1 OF 2)

Change: R36 (lower left of schematic)

from: 51.1 ohms to: zero ohm resistor jumper

▶ Section 8. Page 8-267, Figure 8-29. A3 NLD/Modem Schematic Diagram (Sheet 2 of 2)

Delete: trace connecting pins 1 and 2 of U300 across R118 (upper left of schematic)

A4 ASSEMBLY ERRATA:

Section 6. Page 6-29, Table 6-2. 4945A REPLACEABLE PARTS

Change: A4R51 to read as follows:

0699-0115 CD= 9 RESISTOR-FIXED 14.23K .1% .125W
MFR CODE= 02995 MFR PN= 5033R

Change: A4R53 to read as follows:

0699-0721 CD=3 RESISTOR-FIXED 33.0K .1% 0.125W
MFR CODE=01074 MFR PN H8

Section 8. Page 8-271, Figure 8-31.A4 AUTORANGE AMPLIFIER SCHEMATIC DIAGRAM

Change: R51 (upper left of schematic)

from: 10K to: 14.23K

Change: R53 (upper left of schematic)

from: 23.7K to: 33.0K

Section 6. Page 6-30, Table 6-2. 4945A REPLACEABLE PARTS

Change: HP Part Number 4040-0747

from: Qty = 1 to: Qty = 2

A5 ASSEMBLY ERRATA:

Section 6. Page 6-31, Table 6-2. 4945A REPLACEABLE PARTS

Delete: A5C67 and associated information

Section 6. Page 6-32, Table 6-2. 4945A REPLACEABLE PARTS

Add: A5C76 0160-4819 CD= 9 Qty = 1 CAPACITOR-FIXED 2200 pf
5% 100VDC MFR CODE=02798 MFR PN= CAC04C06222J100A

▶ Section.8 Page 8-276, 04945-60005 Component Locator

Replace the Component Locator on page 8-276 with the attached page located at rear of change sheet.

▶ Section 8. Page 8-277, Figure 8-33. A5 DETECTOR SCHEMATIC DIAGRAM

Replace the schematic diagram on page 8-277 with the attached page located at rear of change sheet.

A6 ASSEMBLY ERRATA:

Section 6. Page 6- 34, Table 6-2. REPLACEABLE PARTS

Delete: A6C3 and associated information

Change: A6C6 Qty to: Qty = 20

▶ Section 8. Page 8-282, 04945-60006 Component Locator

Delete: C3 (upper left corner)

Section 8. Page 8-283, Figure 8-35. A6 JITTER BOARD SCHEMATIC DIAGRAM

Delete: C3 .01 (lower right of schematic)

A7 ASSEMBLY ERRATA:

Section 6. Page 6-37, Table 6-2. 4945A REPLACEABLE PARTS

Add: A7C39 0160-5298 CD=8 CAPACITOR-FIXED .01uf +- 20% 100VDC
MFR CODE=02010 MFR PN= MD011C103MAA

Change: A7C4 Qty

from: Qty = 38 to: Qty = 39

Section 6. Page 6-39, Table 6-2. 4945A REPLACEABLE PARTS

Delete: A7U107 and associated information

Section 8. Page 8-287, Figure 8-37. A7 ENVELOPE DELAY SCHEMATIC DIAGRAM

Delete: C8 100pf (center right of schematic)

Delete: C3 100pf (center right of schematic)

Delete: C39 100pf (two C39 capacitors are shown on schematic- delete the one which is connected to U207-7 in the center of the schematic)

Change: R44 (upper left of schematic)

from: 5.1K to: 5.11K

A8 ASSEMBLY ERRATA:

Section 6. Page 6-40, Table 6-2. 4945A REPLACEABLE PARTS

Change: A8R2 to read as follows:

0698-3453 CD= 2 RESISTOR-FIXED 196K 1% .125W
MFR CODE= 02995 MFR PN= 5033R

Change: A8R3 and A8R7 to read as follows:

0757-0442 CD=9 RESISTOR-FIXED 10K 1% .125W
MFR CODE= 02995 MFR PN= 5033R

Change: A8R4 and A8R13 to read as follows:

0757-0280 CD=3 RESISTOR-FIXED 1K 1 % .125W
MFR CODE= 02995 MFR PN= 5033R

Section 8. Page 8-291, Figure 8-39. A8 FREQUENCY COUNTER SCHEMATIC DIAGRAM

Change: R2 (upper right of schematic)

from: 1.8M to: 196K

Change: R3 and R7 (upper right of schematic)

from: 100K to: 10K

Change: R4 and R13 (upper right of schematic)

from: 10K to: 1K

A9 ASSEMBLY ERRATA:

Section 6. Page 6-42, Table 6-2. 4945A REPLACEABLE PARTS

▶ Add: A9JU2 1258-0141 CD= 8 Qty= 3 Jumper-Rem Mfr Code= 28480
Mfr PN= 1258-0141

Add: A9C48 and A9C49 0160-0127 CD=2 CAPACITOR 1uf 25V 20%
MFR CODE= 28480 MFR PN= 0160-0127

▶ Section 8. Page 8-296, 04945-60009 Component Locator

Replace the Component Locator on page 8-296 with the attached page located at rear of change sheeet.

Section 8. Page 8-299, Figure 8-41. A9 TRANSIENTS DETECTOR SCHEMATIC DIAGRAM (SHEET 2 OF 2)

▶ Change: R9 (upper right of schematic) from: 100K

to: 121K

▶ Change: R15 and R16 (center right of schematic) from: 56.20

to: 5.62K

Revise: Figure 8-41. to look like the shaded portions of the attached diagram.

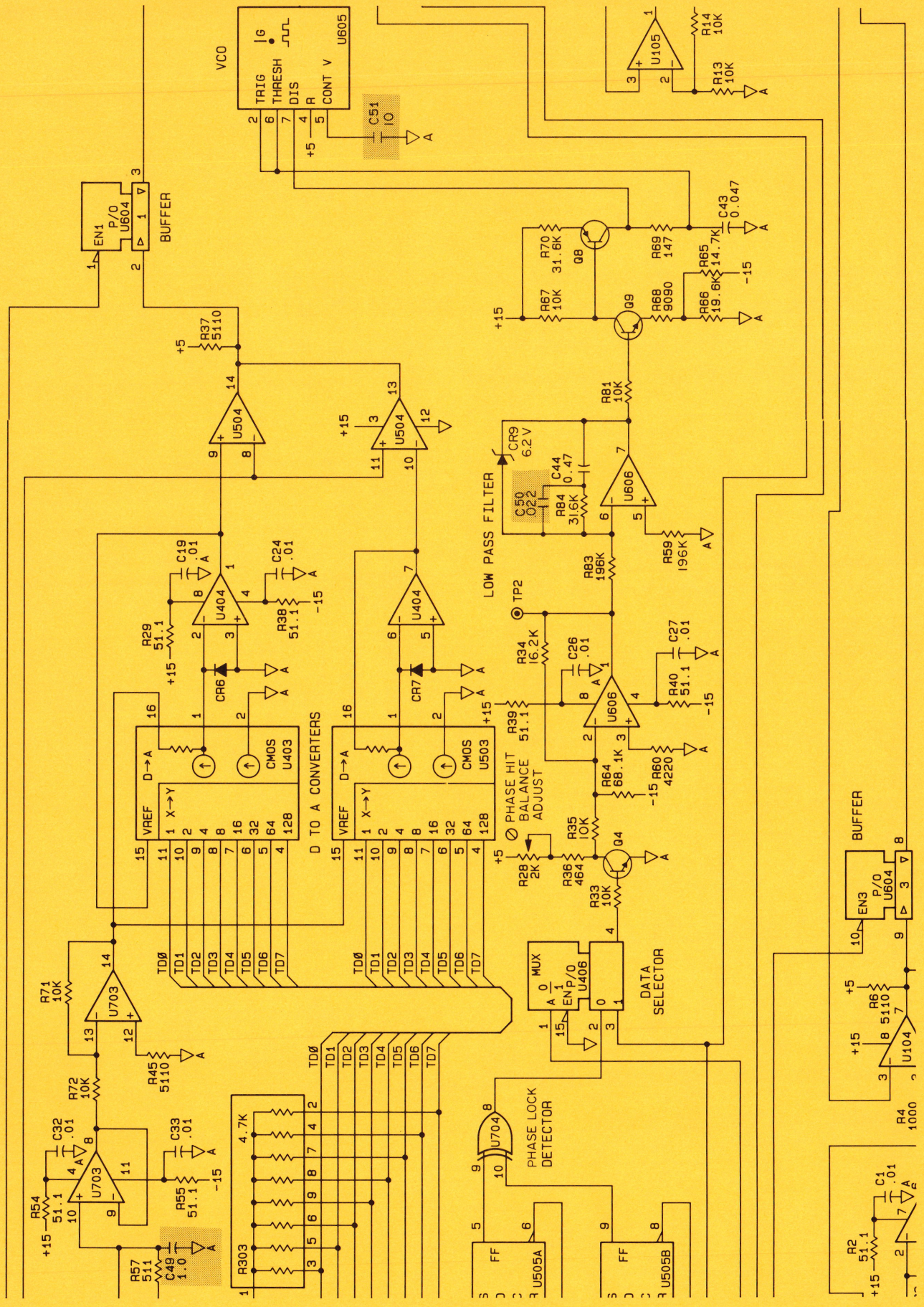

Page 8-299 Figure 8-41. A9 TRANSIENTS DETECTOR SCHEMATIC DIAGRAM (SHEET 2 OF 2)

A11 ASSEMBLY ERRATA:

Section 6. Page 6-47, Table 6-2. 4945A REPLACEABLE PARTS

Change: A11R5 to read as follows:

0698-8958 CD= 2 RESISTOR-FIXED 511K 1% .125W
MFR CODE= 02995 MFR PN= 5033R

Section 8. Page 8-231, Figure 8-18. A11 SYSTEM PROCESSOR SCHEMATIC DIAGRAM
(SHEET 1 OF 2)

Change: R5 (lower left of schematic)

from: 100K to: 511K

▶A13 ASSEMBLY ERRATA:

▶Section 6. Page 6-51, Table 6-2. 4945A REPLACEABLE PARTS

Delete: A13C40 and associated information

Change: Reference Designator A13C41 to A13C40

Change: Reference Designator A13E509 to A13JU501

Add: A13JU106 HP PN= 1258-0141 CD= 8 Qty= 1 Jumper-Rem
Mfr Code= 28480 Mfr PN= 1258-0141

Add: A13J106 HP PN= 1251-8171 CD= 6 Qty= 1 Conn-post type .100-
pin-SPCG 3-cont Mfr Code= 28480 Mfr PN= 1251-8171

▶Section 6. Page 6-52, Table 6-2. 4945A REPLACEABLE PARTS

Change: Reference Designator A13U200 to A13 U100

Change: Reference Designator A13U201 to A13U200

Change: Reference Designator A13U202 to A13U102

Change: Reference Designator A13U604 to A13U605

Change: Reference Designator A13U606 to A13U607

Change: Reference Designator A13U704 to A13U705

Change: Reference Designator A13U705 to A13U706

Change: Reference Designator A13U706 to A13U707

Change: Reference Designator A13U806 to A13VR1

A13 ASSEMBLY ERRATA cont.:

▶ Section 8. Page 8-328, 04945-60013 Component Locator

Replace the Component Locator on page 8-328 with the attached page located at rear of change sheet.

A14 ASSEMBLY ERRATA:

▶ Section 8. Page 8-305, Figure 8-43. A14 Transmitter Control Schematic Diagram (Sheet 1 of 2)

Revise the schematic as follows:

Connect pins 4 and 14 of U600 together

Disconnect pin 14 of U600 from pin 10 of U500

A17 ASSEMBLY ERRATA:

Section 6. Page 6-58, Table 6-2. 4945A REPLACEABLE PARTS

Change: A17C16 and A17C17 (center of schematic)

from: 0180-3312 8.2uf

to: 2.16uf Part Number to be added later in Service Note.

Section 6. Page 6-59, Table 6-2. 4945A REPLACEABLE PARTS

Change: A17Q1 and A17Q14

from: 1853-0221

to: Part Number to be added later in Service Note.

A17 ASSEMBLY ERRATA cont.:

Section 6. Page 6-60, Table 6-2. 4945A REPLACEABLE PARTS

Change: A17R46 and A17R47 to read as follows:

0698-6358 CD= 2 Resistor-Fixed 100K .1% .125W
Mfr Code= 2995 Mfr PN= 5033R

Change: A17R64 and A17R67 to read as follows:

0699-0123 CD=9 RESISTOR-FIXED 6.75K .1% .125W
MFR CODE= 02995 MFR PN= 5033R

Add: A17R99 0698-8750 CD= 2 RESISTOR-FIXED 75K .5% .1W
MFR CODE= 02995 MFR PN= 5023Z

Add: A17R100 0698-8750 CD= 2 RESISTOR-FIXED 75K .5% .1W
MFR CODE= 02995 MFR PN= 5023Z

Add: A17R101 2100-3154 CD=7 RESISTOR 1K POT MFR CODE= 28480
MFR PN= 2100-3154

▶ Section 8. Page 8-316, 04945-60017 Component Locator

Replace the Component Locator on page 8-316 with the attached page located at rear of change sheet.

▶ Section 8. Page 8-317, Figure 8-47. A17 ACTIVE OUTPUT SCHEMATIC DIAGRAM

Replace the Schematic Diagram on page 8-317 with the attached page located at rear of change sheet.

A18 ASSEMBLY ERRATA:

▶ Section 8. Page 8-321, Figure 8-49. A18 Transmitter Output Schematic Diagram

Replace the Schematic Diagram on page 8-321 with the attached page located at rear of change sheet.

▶A19 ASSEMBLY ERRATA:

▶Section 6. Page 6-64, Table 6-2. 4945A REPLACEABLE PARTS

Change: A19R20 to read as follows:

2100-2796 CD= 1 Qty= 1 Resistor-Var Control 100 +-20% Mfr Code= 28480
Mfr PN= 2100-2796

▶Section 8. Page 8-339, Figure 8-53. A19 CRT Driver Schematic Diagram

Change: Reference Designator C40 47 uf (center of schematic) to C43

A21 ASSEMBLY ERRATA:

Section 6. Page 6-67, Table 6-2.4945A REPLACEABLE PARTS

Change: A21R3 and A21R7 to read as follows:

0757-0401 CD= 0 RESISTOR-FIXED 100 OHMS 1% .125W
MFR CODE= 02995 MFR PN= 5033R

Change: A21C8 to read as follows:

0180-3221 CD= 5 CAP-FIXED ELECTROLYTIC 10 uf 20% 100VDC
MFR CODE=00493 MFR PN= SM100VB-10(M)

Section 8. Page 8-349, Figure 8-56. POWER SUPPLY AC AND DC INTERCONNECTION SCHEMATIC DIAGRAM

Change: R3 and R7 (lower right of schematic)

from: 1K to: 100 ohms

Change: C8 (lower right of schematic)

from: 1 uf to: 10 uf

▶A22 ASSEMBLY ERRATA:

Section 6. Page 6-69, Table 6-2.4945A REPLACEABLE PARTS

Change: A22W1 and A21W2 HP PN and Mfr PN from: 04945-61013
to: 04945-61613

A22 ASSEMBLY ERRATA cont.;

▶Section 8. Page 8-351, Figure 8-57. A22 Motherboard Schematic Diagram

Replace the Schematic Diagram on page 8-351 with the attached page located at rear of change sheet.

▶A58 ASSEMBLY ERRATA:

Section 8. Page 8-353, Figure 8-58. A58 Front Panel Connector Schematic Diagram

Replace the Schematic Diagram on page 8-353 with the attached page located at rear of change sheet.

MISCELLANEOUS ERRATA:

▶Section 6. Page 6-78, Table 6-2.4945A REPLACEABLE PARTS

Change: HP Part Number and Mfr PN 04945-90007 Oper Manual to 04945-90001

Section 8-14. Page 8-43, + 5 VOLT SIGNATURE TABLE

Change: A11 S406 SWITCH POS 3 : + 5 VOLT SIGNATURE

from: C6FF to: AHC3

Section 8-16. SYSTEM PROCESSOR SA TABLES (A11,A12,A13)

Replace the following pages with the attached pages located at rear of change sheet:

P/O Page 8-54 Table 8-9. SA Program Loop 3a, Table 8-10. SA Program Loop 3a:15

Page 8-55/56

▶Section 8-16. Page 8-50, Table 8-2. A11 Free Run Loop B

Change the signatures for U604 to read as follows:

U604	-9 = A004	14 = H60F
	10 = PP0F	15 = 4685
	11 = H2CF	16 = 57U4
	13 = 3261	17 = 2452

▶Section 8-16. Page 8-52, Table 8-5. SA Program Loop 1

Change the signatures for U604 to read as follows:

U604 -9 = 0836	13 = P483	16 = 320H
10 = 7055	14 = 7948	17 = 0F53
11 = 425P	15 = P311	

▶Section 8-16. Page 8-52, Table 8-6. SA Program Loop 1:15

Loop 1:15 is not valid, and will be revised in a later Service Note.

▶Section 8-16. Page 8-54, Table 8-11. SA Program Loop 3b

Loop 3b is not valid, and will be revised in a later Service Note.

▶Section 8-16. Page 8-62, Table 8-29. SA Program Loop 12a:15

Change the +5v ref. and signatures for U401 and U601 to read as follows:

+5 V ref. = 53HF	U601 - 4 = U2H3
	- 5 = F37U
U401 -12 = U415	- 6 = 1951
	- 7 = 2P3C
	- 9 = 0F7H
	-10 = CP55

▶Section 8-16. Page 8-62, Table 8-33. SA Program Loop 13b

Loop 13b is not valid, and will be revised in a later Service Note.

▶Section 8-17. RECEIVER PROCESSOR

Replace the following pages with the attached pages located at rear of change sheet:

Page 8-63/64
Page 8-65/66
Page 8-67/68

I/O INTERFACE ASSEMBLIES ERRATA:

Section 8-18. INTERFACE TROUBLESHOOTING

Replace the following pages with the attached pages located at the rear of change sheet.

▶ Page 8-79/80
Page 8-81/82
Page 8-83/84

I/O INTERFACE ASSEMBLIES ERRATA cont.:

▶ Section 6. Page 6-79, Table 6-2. 4945A REPLACEABLE PARTS

Add: R3 0698-3449 CD= 6 Qty= 1 Resistor-Fixed 28.7K +- 1% .125W
Mfr Code= 02995 Mfr PN= 5033R

Add: MP101 and MP301: 1205-0428 CD= 3 Qty= 2 Heatsink Dip-40
Mfr Code= 28480 Mfr PN= 1205-0428

Add: MP202: 1205-0342 CD= 0 Qty= 1 Heatsink Dip-14 Mfr Code= 28480
Mfr PN= 1205-0342

▶ Section 8. Page 8-362, 04945-HP-IB 18162 Component Locator

Add: R3 across Y1 terminals

▶ Section 8. Page 8-363, Figure 8-62. 18162A HP-IB Interface Schematic Diagram

Add: R3 across the terminals of Y1 crystal, putting it in parallel with Y1 and C10 and C11.

▶ Section 6. Page 6-80, Table 6-2. 4945A REPLACEABLE PARTS

Add: R3 0698-3449 CD= 6 Qty= 1 Resistor-Fixed 28.7K +- 1% .125W
Mfr Code= 02995 Mfr PN= 5033R

Add: MP103 1205-0342 CD= 0 Qty= 1 Heatsink Dip-14 Mfr Code= 28480
Mfr PN= 1205-0342

Add: MP407 1205-0428 CD= 3 Qty= 1 Heatsink Dip-40 Mfr Code= 28480
Mfr PN= 1205-0428

Change: Reference Designator U407 to U401

▶ Section 8. Page 8-368, 04945-RS232-18163 Component Locator

Add: R3 across Y1 terminals

▶ Section 8. Page 8-369, Figure 8-63. 18163A RS-232 Interface Schematic Diagram

Add: R3 across the terminals of Y1, putting it in parallel with Y1 and C20 and C21.

▶ Section 6. Page 6-82, Table 6-2. 4945A REPLACEABLE PARTS

Add: R12 0698-3449 CD= 6 Qty= 1 Resistor-Fixed 28.7K +- 1% .125W
Mfr Code= 02995 Mfr PN= 5033R

Add: MP501 1205-0428 CD= 3 Qty= 1 Heatsink Dip-40 Mfr Code= 28480
Mfr PN= 1205-0428

I/O INTERFACE ASSEMBLIES ERRATA cont.:

▶ Section 8. Page 8-374, 04945-HP-IL-18165 Component Locator

Add: R12 across Y1 terminals

Section 8. Page 8-375, Figure 8-64. 18165A HP-IL Interface Schematic Diagram

Add: R12 across the terminals of Y1, putting it in parallel with Y1 and C10 and C11.

DIAGNOSTIC ERRATA:

▶ Section 8-21. Page 8-95, MODE 1: Detector Digital And ADC Check (A5)

Change: Data Segment 12 Results Displayed from: 190 +- 10 mv

to: 188 +- 18 mv

▶ Section 8-21. Page 8-103, MODE 1: Detector Digital And ADC Check(A5) cont.

Change:

Errors	Description
XX1111	Programmable counter never starts counting down
XXX111	Programmable counter never starts counting up
XXXX11	Count up period s too long

to:

Errors	Description
XX1XXX	Programmable counter never starts counting down
XXX1XX	Programmable counter never starts countig up
XXXX1X	Count up period is too long

▶ Section 8-23. Page 8-113, MODE 3: Basic Transmitter Check (A5,A15) cont.

Change: Data Segment 4 Results Displayed from: 221 +/- 6

to: 221 +/- 20

Data Segment 5 Results Displayed from: 234 +/- 6

to: 245 +/- 20

DIAGNOSTIC ERRATA cont.:

▶Section 8-25. Page 8-123, MODE 5: Narrowband Autorange Amplifier Check (A4, A15,A17)

Change: Data Segment 13 Results Displayed from: 50000 +- 2500

to: 50000 +- 5000

Data Segment 14 Results Displayed from: 50000 +- 2500

to: 50000 +- 5000

Data Segment 15 Results Displayed from: 60000 +10000/-5000

to: 60000 +2000/-5000

Data Segment 16 Results Displayed from: 60000 +10000/-5000

to: 60000 +2000/-5000

▶Section 8-26. Page 8-128, MODE 6: Frequency Counter and Crystal Check (A14, A17,A8) cont.

Change: Data Segment 1 Results Displayed from: 625 +/- 0

to: 625 +/- 1

Change: Data Segment 2 Results Displayed from: 1000 +/- 0

to: 1000 +/- 1

Change: Data Segment 3 Results Displayed from: 1000 +/- 0

to: 1000 +/- 1

Change: Data Segment 4 Results Displayed from: 8192 +/- 0

to: 8192 +/- 1

▶Section 8-28. Page 8-141, MODE 8: Transmitter Multi-tone Check (A14,A8)

Add the following below General Mode 8 Troubleshooting paragraph 3:

If a segment fails with data 1111, 2222, 3333, or 4444, it indicates that a frequency latch other than the one selected is in operation (possible addressing problem). For example, if segment 6 through 9 all read 1111, it means that frequency latch 1 has been selected instead of frequency latch 3.

DIAGNOSTIC ERRATA cont.:

▶ Section 8-28. Page 8-143, MODE 8: Transmitter Multi-tone Check (A14,A8) cont.

Replace page 8-143/144 with the attached page located at rear of change sheet.

▶ Section 8-29. Page 8-145, MODE 9: Transmitter Filter Sweep (A15)

Replace page 8-145/146 with the attached page located at rear of change sheet.

▶ Section 8-30. Page 8-149, MODE 10: Transmitter Alternate Channel Check (A17)

Change Data Segment 1 Results Displayed from: 1000 ± 0

to: 1000 ± 10

Change Data Segment 4 Results Displayed from: 800 ± 0

to: 800 ± 10

Change Data Segment 6 Results Displayed from: 1200 ± 0

to: 1200 ± 10

Change Data Segment 8 Results Displayed from: 2000 ± 0

to: 2000 ± 10

▶ Section 8-31. Page 8-154, MODE 11: Wideband Filter Calibration (A2)

Replace page 8-153/154 with the attached page located at rear of change sheet.

▶ Section 8-34. Page 8-166, MODE 14: A1 and A18 Check

Replace page 8-165/166 with the attached page located at rear of change sheet.

▶ Section 8-34. Page 8-167, MODE 14: A1 and A18 Check cont.

Change paragraphs 3 and 4 to read as follows:

If a few of the paths are off severely, suspect a relay fault (terminations do not switch), mismatch of the 1 K resistors, or the 499 ohm resistor out of tolerance on A18.

If paths 4 through 9 all fail, suspect a fault in the active input or the return loss transformer. One cause is the loss of the 100 volt supplies. Here are the points to check and the expected levels. In all cases a 1000 Hz sine wave is used. The levels are for segment 8.

DIAGNOSTIC ERRATA cont.:

▶Section 8-35. Page 8-170, MODE 15: IMD Hardware Check (A3)

Replace page 8-169/170 with the attached page located at rear of change sheet.

▶Section 8-36. Page 8-176. MODE 16: IMD Filter Calibration (A3)

Replace page 8-175/176 with the attached page located at rear of change sheet.

▶Section 8-36. Page 8-177, MODE 16: IMD Calibration (A3) cont.

Add the following information below the Path 3 information:

Path 4

The IMD (4) tone waveform is routed through each of the IMD bandpass filters and the resultant whitenoise level is measured.

Check A1 TP2 Differential Output for IMD 4 tone at -40 dBm.

Check A4 TP5 Wideband Output for whitenoise at 500mV RMS +— 500mV.

▶Section 8-39. Page 8-195, MODE 19: Envelope Delay Hardware Check (A7)

Replace page 8-195/196 with the attached page located at rear of change sheet.

▶Section 8-41. Page 8-206, MODE 21: Transient Measurements Check (A9)

Change Data Segment 15 Results Displayed from: 500 +— 10

to: 500 +— 20

CHANGE 1

* OF THE INSTRUMENTS WITH SERIAL PREFIX 2406A, ONLY THE FOLLOWING NEED TO HAVE CHANGE 1 MADE:

2406A00126
2406A00134
2406A00166
2406A00173
2406A00175 THRU 2406A00180

Page 6-32, Table 6-2. 4945A REPLACEABLE PARTS

Delete: C74 and associated information

Delete: C75 and associated information

Delete: R18 and associated information

Delete: R19 and associated information

Delete: R53 and associated information

Page 8-276, 04945-60005 COMPONENT LOCATOR

Revise the upper right portion of the component locator to look like the shaded portion of the attached diagram.

NOTE: Page 8-276 MUST be replaced FIRST, as indicated under A5 ASSEMBLY ERRATA, before the above revision can be done.

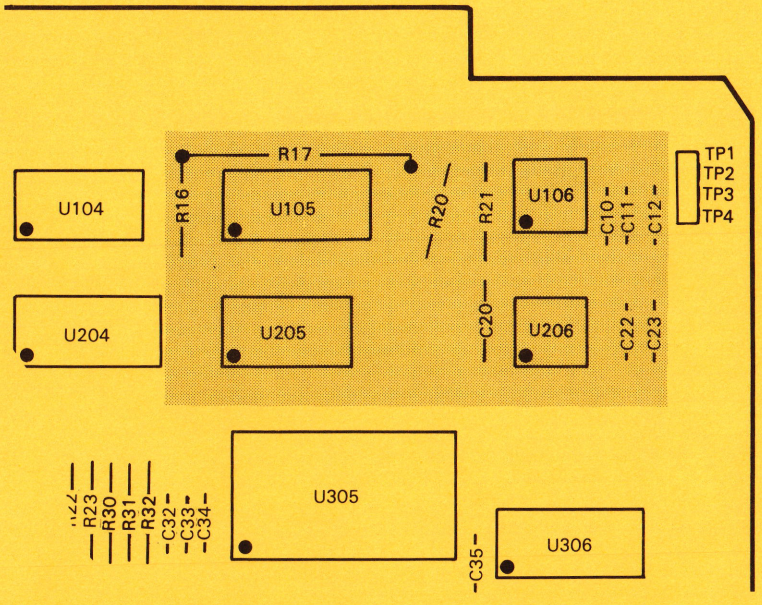

CHANGE 1 cont.

Page 8-277, Figure 8-33. A5 Detector Schematic Diagram

Revise part of Figure 8-33. to look like the shaded portions of the attached diagram.

NOTE: Page 8-277 MUST be replaced FIRST, as indicated under A5 ASSEMBLY ERRATA, before the above revision can be done.

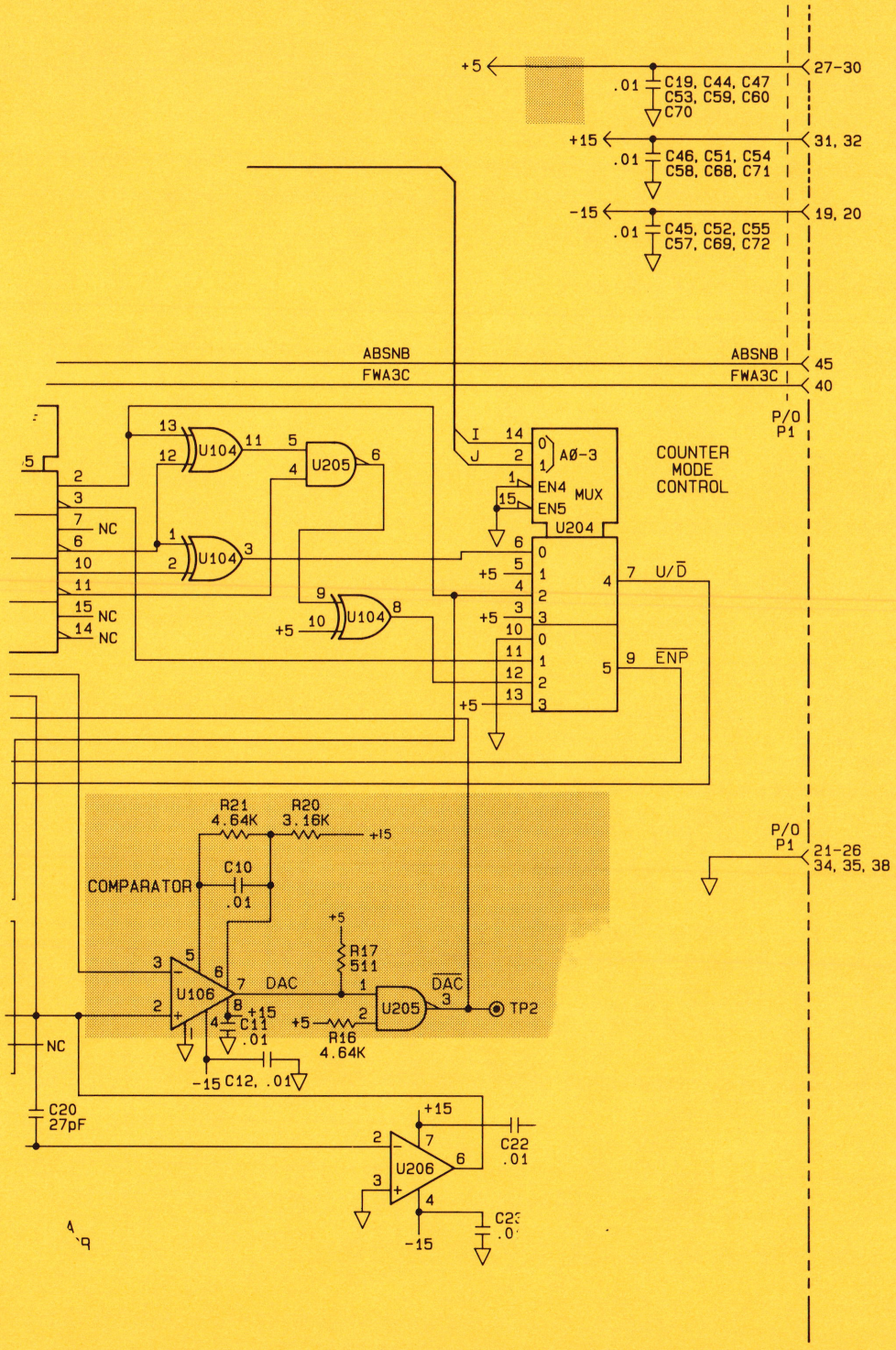

CHANGE 2:

Page 6-35, Table 6-2. 4945A REPLACEABLE PARTS

Change A6R20 and A6R24 to read as follows:

0698-3154 CD= 9, Resistor-fxd 4.22K 1% .125W, MFR CODE 02995, MFR P/N 5033R

Change A6R34 to read as follows:

0757-0460 CD= 1, Resistor-fxd 61.9K 1% .125W, MFR CODE 02995, MFR P/N 5033R

Change A6R37 to read as follows:

0698-3158 CD=4, Resistor-fxd 23.7K 1% .125W, MFR CODE 02995, MFR P/N 5033R

Change A6R41 to read as follows:

0698-3454 CD=9, Resistor-fxd 215K 1% .125W, MFR CODE 02995, MFR P/N 5033R

Page 6-39, Table 6-2. 4945A REPLACEABLE PARTS

Change A7VR1 to read as follows:

04945-80061 CD= 7, Selected Opto-Isolator, MFR CODE 28480, MFR P/N 04945-80061

Page 6-46, Table 6-2. 4945A REPLACEABLE PARTS

Change A10U305 to read as follows:

04945-10026 CD= 7, Qty= 1, RCVR PROM 23, MFR CODE 28480, MFR P/N 04945-10026

Change A10U308 to read as follows:

04945-10025 CD= 6, Qty= 1, RCVR PROM 89, MFR CODE 28480, MFR P/N 04945-10025

Change A10U607 to read as follows:

04945-10024 CD= 5, Qty =1, RCVR PROM EF, MFR CODE 28480, MFR P/N 04945-10024

Page 6-48, Table 6-2. 4945A REPLACEABLE PARTS

Change A11U604 to read as follows:

04945-10023 CD= 4, Qty= 1, SYS PROM , MFR CODE 28480, MFR P/N 04945-10023

CHANGE 2 cont.

Section 8-16. SYSTEM PROCESSOR SA TABLES (A11, A12, A13)

Replace the following pages with the attached pages located at rear of change sheet.

BE SURE that the replaceable pages are marked as replacement pages for 2407A instruments ONLY.

P/O Page 8-50 Table 8-2. A11 Free Run Loop B

Page 8-51/52

Section 8-17. RECEIVER PROCESSOR

Replace the following pages with the attached pages located at rear of change sheet.

BE SURE that the replaceable pages are marked as replaceable pages for 2407A instruments ONLY.

Page 8-63/64

Page 8-65/66

Page 8-67/68

P/O Page 8-69 Table 8-44. A10 SA Program Loop K and Table 8-45. A10 SA Program Loop L

HEWLETT PACKARD

MANUAL CHANGES

MANUAL DESCRIPTION	
INSTRUMENT:	4945A
SERIAL PREFIX:	2344A
DATE PRINTED:	NOVEMBER 1983
HP PART NO:	5957-4423-I
MICROFICHE NO:	5957-4424

CHANGE DATE 5 NOVEMBER 1984

(This change sheet supercedes change sheet 5957-4423- H only.)

* Make all changes listed as ERRATA.

* Check the following table for your instrument's serial prefix or serial number and make the listed change(s) to your manual.

CHANGES FOR YOUR 4945A MAINFRAME:

If your 4945A has prefix or serial serial number	Make these changes to your manual	If your 4945A has serial prefix or serial number	Make these changes to your manual
2407A00201 and >	1	2426A	1,2,3,4,5
2407A00221 and >	1,2	2435A	1,2,3,4,5,6
2413A	1,2,3	2447A	1,2,3,4,5,6,7
2420A	1,2,3,4		

CHANGES FOR YOUR 4945A I/O MODULES:

18162A Pods with serial numbers	Make these changes to your manual
2343A00136 - 2343A00165	8
2420A	9
2442A	7,10

18163A Pods with serial numbers	Make these changes to your manual
2344A00149, 153- 160, 164, 165, 167, 171-173, 175, or 176 and >	11
2442A	7,12

18165A Pods with serial prefixes	Make these changes to your manual
2442A	7,13

NEW ITEM ▶

Model 4945A
Manual Change Sheet

ERRATA

▶Section 1, General Information
Replace the following pages with the attached pages:

1-5 through 1-10

Page 6-18, Table 6-2. 4945A Replaceable Parts
Change A1R57 and A1R58 to read as follows:

0698-6628, CD= 5, RESISTOR-FXD 500K +-.1% .125W, Mfr Code 02995, Mfr P/N 5033R

Page 6-19, Table 6-2. 4945A Replaceable Parts
Change A1R67 to read as follows:

0698-6631, CD= 4, RESISTOR-FXD 2.5K +-.1% .125W, Mfr Code 02995, Mfr P/N 5033R

Page 6-27, Table 6-2. 4945A Replaceable Parts
Add: A3R120, 0757-0424, CD=7, RESISTOR-FXD +-1% .125W, Mfr Code 02995, Mfr P/N 5033R

Page 6-58, Table 6-2. 4945A Replaceable Parts
Change A17C16 and A17C17 to read as follows:

0160-5716, CD= 5, Qty= 2, CAPACITOR-FXD 2.16uf 1% 100V, Mfr Code 05176, Mfr P/N HEW-704

Page 6-59, Table 6-2. 4945A Replaceable Parts
Change A17Q1 and A17Q14 to read as follows:

1853-0576, CD= 5, Qty= 2, TRANSISTIOR PNP, Mfr Code 28480, Mfr P/N 1853-0576

▶Page 6-62, Table 6-2. 4945A Replaceable Parts
Delete Reference Designator A18R22

Change Reference Designator A18R23 to A18R24

Change Reference Designator A18R24 to A18R22

Change Reference Designator A18R25 to A18R23

ERRATA cont.

▶Page 6-65, Table 6-2. 4945A Replaceable Parts
Change A19TP500 to read as follows:

A19TP504, 0360-1682, CD= 0, TERMINAL-TEST POINT .330 IN ABOVE,
Mfr Code 28480, Mfr P/N 0360-1682

Change A19TP501 and A19TP502 to read as follows:

0360-1682, CD= 0, TERMINAL TEST POINT .330 IN ABOVE,
Mfr Code 28480, Mfr P/N 0360-1682

Change A19TP508 to read as follows:

A19TP506, CD= 0, TERMINAL TEST POINT .330 IN ABOVE,
Mfr code 28480, Mfr P/N 0360-1682

Page 8-251, Figure 8-25. A1 Receiver Input Schematic Diagram
Change R57 and R58 (center of schematic) to 500K

Change R67 (center of schematic) to 2.50K

Page 8-267. Figure 8-29. A3 NLD/Modem Schematic Diagram (Sheet 2 of 2)

Disconnect the pin of VR1 which is shown connected to U300-7. Reconnect this pin to U300-5.

Page 8-317, Figure 8-47. A17 Active Output Schematic Diagram
Change C17 from 8uf to 2.16uf(NOTE: Make this change on the replacement schematic that should have been incorporated with Change Sheet 5957-4423-D).

Model 4945A
Manual Change Sheet

CHANGE 1

Page 6-35, Table 6-2. 4945A Replaceable Parts
Change A6R5 to read as follows:

0757-0290, CD= 5, RESISTOR-FXD 6.19K +-1% .125W, Mfr Code 02995, Mfr P/N 5033R

Change A6R6 to read as follows:

0757-0470, CD= 3, RESISTOR-FXD 162K +-1% .125W, Mfr Code 02995, Mfr P/N 5033R

Change A6R26 to read as follows:

0698-3452, CD= 1, RESISTOR-FXD 147K +-1% .125W, Mfr Code 02995, Mfr P/N 5033R

Page 8-283, Figure 8-35. A6 Jitter Board Schematic Diagram
Change : R5 (center of schematic) from 6.81K to 6.19K

Change: R6 (center of schematic) from 178K to 162K

Change: R26 (center of schematic) from 162K to 147K

CHANGE 2

Page 6-42, Table 6-2. 4945A Replaceable Parts
Change A9C48 to read as follows:

0160-4535, CD= 5, CAPACITOR-FXD 1uf +-10% 50VDC CER, Mfr Code 00901, Mfr P/N C330C105K5R5CA

Change A9Q1 and A9Q4 to read as follows:

1855-0525, CD= 8, TRANSISTOR-MOSFET N-CHAN E-MODE SI, Mfr Code 02883, Mfr P/N VN0300M

Page 6-43, Table 6-2. 4945A Replaceable Parts
Change A9R11 and A9R33 to read as follows:

8159-0005, CD= 0, RESSITOR-ZERO OHM 22 AWG LEAD DIA., Mfr Code 01339, Mfr P/N L-2007-1

Change A9R12 to read as follows:

0757-0280, CD= 3, RESISTOR-FXD 1K +-1% .125W, Mfr Code 02995, Mfr P/N 5033R

CHANGE 2 cont.

Change A9R14 to read as follows:

0698-8061, CD= 8, RESISTOR-FXD 8.25K +-.1% .125W, Mfr Code 02995, Mfr P/N 5033R

Change A9R58 to read as follows:

0757-0464, CD= 5, RESISTOR-FXD 90.9K +-1% .125W, Mfr Code 02995, Mfr P/N 5033R

Page 8-299, Figure 8-41. A9 Transmitter Detector Schematic Diagram (Sheet 2 of 2)

Replace Figure 8-41. with the attached replacement page.

CHANGE 3

Page 6-17, Table 6-2. 4945A Replaceable Parts
Change A1C9 and A1C10 to read as follows:

0160-6177, CD= 4, Qty= 2, CAPACITOR-FXD 2.2uf 100VAC, Mfr Code 28480, Mfr P/N 0160-6177

Page 6-19, Table 6-2. 4945A Replaceable Parts
Add: A1R300, 1810-0305, CD= 8, Qty= 1, RESISTOR-NETWORK 4.7K X 8, Mfr Code 28480, Mfr P/N 1810-0305

Add: A1R301, 1810-0367, CD=2, Qty= 1, RESISTOR-NTEWORK 4.7K x 5, Mfr Code 28480, Mfr P/N 1810-0367

Page 6-22, Table 6-2. 4945A Replaceable Parts
Change A2R97 to read as follows:

0698-3942, CD= 4, Qty= 1, RESISTOR-FXD 69.8K +- .1% .125W, Mfr Code= 02995, Mfr P/N 5033R

Page 6-23, Table 6-2. 4945A Replaceable Parts
Change A2R115 to read as follows:

0698-8061, CD= 8, Qty= 1, RESISTOR-FXD 8.25K +- .1% .125W, Mfr Code 02995, Mfr P/N 5033R

CHANGE 3 cont.

Page 6-42, Table 6-2. 4945A Replaceable Parts
Change A9J1 and A9J2 to read as follows:

1251-8171, CD= 6, CONN-POST TYPE .100-PIN-SPCG 3-CONT, Mfr Code 28480, Mfr P/N 1251-8171

Add: A9J300 1200-0607, CD= 0, Qty= 1, SOCKET-IC 16-CONT DIP DIP-SLDR, Mfr Code 28480, Mfr P/N 1200-0607

Change A9JU1 and A9JU2 to read as follows:

1258-0141, CD= 8, JUMPER-REM, Mfr Code 28480, Mfr P/N 1258-0141

Add: A9JU300 1251-4787, CD= 2, Qty= 1, SHUNT-DIP 8 POSITION, Mfr Code 28480, Mfr P/N 1251-4787

Page 6-44, Table 6-2. 4945A Replaceable Parts
Change A9TP1-4 to to read as follows:

A9TP1,2 1251-5380, CD= 3, Qty= 2, CONNECTOR 2-PIN M POST TYPE, Mfr Code 28480, Mfr P/N 1251-5380

A9TP3,4 1251-5380, CD= 3, CONNECTOR 2-PIN M POST TYPE, Mfr Code 28480, Mfr P/N 1251-5380

Page 8-70, Tables 8-46., 8-47., 8-49., 8-50., and 8-51.
Change the Test Conditions for these Tables to read as follows:

For Table 8-46. A9 Free Run Loop A:
Test Conditions: JU1 in NOP position (down), JU2 in normal position (up), JU3 in NMI DIS position (right), JU4 in normal position (left), and JU300 removed.

For Table 8-47. A9 Free Run Loop B:

Test Conditions: JU1 in NOP position (down), JU2 in normal position (up), JU3 in NMI DIS position (right), JU4 in ROM CON position (right), and JU300 removed.

CHANGE 3 cont.

For Table 8-49. A9 SA Program Loop B:

Test Conditions: JU1 in normal position (up), JU2 in SA position (down), JU3 in normal position (left), JU4 in normal position (left), and JU300 installed.

For Table 8-50. A9 SA Program Loop C:

Test Conditions: JU1 in normal position (up), JU2 in SA position (down), JU3 in NMI DIS position (right), JU4 in normal position (left), and JU300 installed.

For Table 8-51. A9 SA Program Loop D:

Test Conditions: JU1 in normal position (up), JU2 in SA position (down), JU3 in NMI DIS position (right), JU4 in normal position (left), and JU300 installed.

Page 8-250, 04945-60001 A1 Component Locator
Replace the A1 Component Locator with the attached replacement page.

Page 8-251, Figure 8-25. A1 Receiver Input Schematic Diagram
Replace Figure 8-25. with the attached replacement page.

Page 8-261, Figure 8-27. A2 Filter Board Schematic Diagram
Change: R97 (lower center of schematic) from 34K to 69.8K

Change: R115 (lower center of schematic) from 16.9K to 8.25K

CHANGE 3 cont.

Page 8-276, 04945-60005 Component Locator
Revise the A5 Component Locator to reflect the changes shown in the shaded portions of the following diagram:

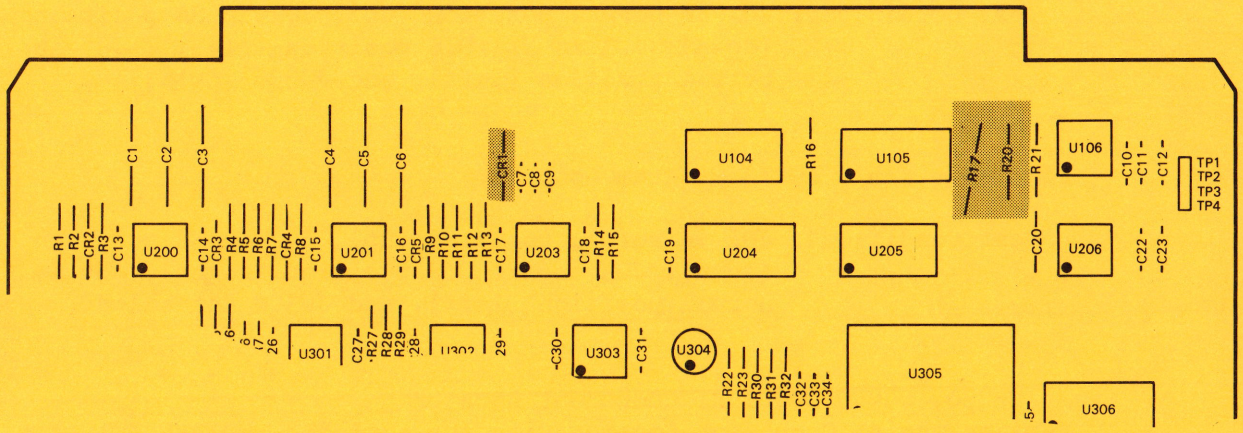

04945-60005

5-84 REV.B-2327

Page 8-296, 04945-60009 Component Locator
Replace the A9 Component Locator with the attached replacement page.

Model 4945A
Manual Change Sheet

CHANGE 4

Page 6-42, Table 6-2. 4945A Replaceable Parts
Change A9CR9 to read as follows:

1902-0905, CD= 9, Qty= 1, DIODE-ZNR 5.6V 5% DO-7 PD= .4W IR=50NA, Mfr Code 01691, Mfr P/N LVA56A

Page 6-46, Table 6-2. 4945A Replaceable Parts
Change A10U306 to read as follows:

04945-10027, CD= 8, Qty= 1, RCVR PROM 45, Mfr Code 28480, Mfr P/N 04945-10027

Section 8-17. Receiver Processor
Replace the following pages with the attached pages:

Page 8-63/8-64

Page 8-65/8-66

Page 8-67/8-68

Page 8-299, Figure 8-41. A9 Transmitter Detector Schematic Diagram (Sheet 2 of 2)

Change voltage of CR9 (center of schematic) from 6.2 to 5.6 V

CHANGE 5

Page 6-27, Table 6-2. 4945A Replaceable Parts
Delete: TP1 through TP6

Add: TP1, 1251-5618, CD= 0, Qty= 1, CONN-POST TYPE .100-PIN-SPCG 8-CONT, Mfr Code 03206, Mfr P/N 65500-108

Page 8-264, 04945-60003 Component Locator
Replace the A3 Component Locator with the attached replacement page.

CHANGE 5 cont.

Page 8-265, Figure 8-29. A3 NLD/Modem Schematic Diagram (Sheet 1 of 2)
Replace Sheet 1 of the A3 Schematic Diagrams with the attached replacement page.

Page 8-267, Figure 8-30. A3 NLD/Modem Schematic Diagram (Sheet 2 of 2)
Replace Sheet 2 of the A3 Schematic Diagrams with the attached replacement page.

CHANGE 6

Instruments beginning with serial prefix 2435A have new component level repairable Power Supplies. This change affects many existing parts of the manual. It also requires the addition of new information.

Table of Contents
Replace the entire Table of Contents with the attached replacement pages.

Section V Adjustments
Replace the entire Section V with the attached replacement pages.

Section VI, Table 6-2. 4945A Replaceable Parts
Replace the following pages of Section VI with the attached replacement pages:

6-1/6-2
6-5/6-6
6-7/6-8
6-9/6-10
6-71/6-72
6-73/6-74
6-75/6-76

Page 6-67, Table 6-2. 4945A Replaceable Parts
Change reference designator A21W1 to A21W4

CHANGE 6 cont.

Section VIII SERVICE: Troubleshooting
Add the following new pages for Power Supply troubleshooting:

8-78a/8-78b

8-78c/8-78d

8-78e/8-78f

Section VIII SERVICE: Power Supply/Motherboard Section
Replace the following pages with the attached replacement pages:

8-341/8-342

8-343/8-344

8-345/8-346

8-347/8-348

8-349/8-350

▶CHANGE 7

Instruments beginning with serial prefix 2447A have new 2.0 version software. Change 7 documents the ROM part numbers that have changed, as well as new Signature Analysis Tables. Other minor changes are also covered.

Page 6-24, Table 6-2. 4945A Replaceable Parts
Change A3C11 to read as follows:

0180-1746, CD= 5, Qty= 5, CAPACITOR-FXD 15 uf +-10 % 20VDC TA, Mfr Code 56289, Mfr P/N 150D156X9020B2

Change A3C12 to read as follows:
0180-0116, CD= 1, Qty= 1, CAPACITOR-FXD 6.8 uf +-10 % 20VDC TA, Mfr Code 04200, Mfr P/N 150D685X9035B2-DYS

Page 6-44, Table 6-2. 4945A Replaceable Parts
Change A9U400 to read as follows:

04945-10028, CD=9, Qty= 1, TRTS ROM, Mfr Code 28480, Mfr P/N 04945-10028

▶CHANGE 7 cont.

Page 6-46, Table 6-2. 4945A Replaceable Parts
Change A10U305 to read as follows:

04945-10029, CD= 0, Qty= 1, RCVR PROM 23, Mfr Code 28480, Mfr P/N 04945-10029

Change A10U306 to read as follows:

04945-10030, CD= 3, Qty= 1, RCVR PROM 45, Mfr Code 28480, Mfr P/N 04945-10030

Change A10U307 to read as follows:

04945-10031, CD= 4, Qty= 1, RCVR PROM 67, Mfr Code 28480, Mfr P/N 04945-10031

Change A10U308 to read as follows:

04945-10032, CD= 5, Qty= 1, RCVR PROM 89, Mfr Code 28480, Mfr P/N 04945-10032

Change A10U407 to read as follows:

04945-10033, CD= 6, Qty= 1, RCVR PROM AB, Mfr Code 28480, Mfr P/N 04945-10033

Change A10U507 to read as follows:

04945-10034, CD= 7, Qty= 1, RCVR PROM CD, Mfr Code 28480, Mfr P/N 04945-10034

Change A10U607 to read as follows:

04945-10035, CD= 8, Qty= 1, RCVR PROM EF, Mfr Code 28480, Mfr P/N 04945-10035

Page 6-48, Table 6-2. 4945A Replaceable Parts
Change A11U604 to read as follows:

04945-10036, CD= 9, Qty= 1, SYS PROM, Mfr Code 28480, Mfr P/N 04945-10036

Page 6-50, Table 6-2. 4945A Replaceable Parts
Change A12U100 to read as follows:

04945-10037, CD= 0, Qty= 1, MEM PROM 6789, Mfr Code 28480, Mfr P/N 04945-10037

▶CHANGE 7 cont.

Change A12U102 to read as follows:

04945-10041, CD= 6, Qty= 1, MEM PROM BANK 3, Mfr Code 28480, Mfr P/N 04945-10041

Change A12U200 to read as follows:

04945-10038, CD= 1, Qty= 1, MEM PROM ABCD, Mfr Code 28480, Mfr P/N 04945-10038

Change A12U300 to read as follows:

04945-10039, CD= 2, Qty= 1, MEM PROM BANK 1, Mfr Code 28480, Mfr P/N 04945-10039

Change A12U302 to read as follows:

04945-10042, CD= 7, Qty= 1, MEM PROM BANK 5, Mfr Code 28480, Mfr P/N 04945-10042

Change A12U400 to read as follows:

04945-10040, CD= 5, Qty= 1, MEM PROM BANK 2, Mfr Code 28480, Mfr P/N 04945-10040

Section VIII SERVICE: Troubleshooting

Replace the following pages with the attached pages:

For Section 8-14. System Processor SA Theory (A11, A12, A13) replace pages:

8-43/8-44

For Section 8-16. System Processor SA Tables (A11, A12, A13) replace pages:

8-49 through 8-62 (SA Table headings should specify 2.0 software).

For Section 8-17. Receiver Processor SA Tables (A10, A9, A1-A8) replace pages:

8-63 through 8-78 (SA Table headings should specify 2.0 software).

For Section 8-18. Interface Troubleshooting replace pages:

8-79 through 8-90 (SA Table headings should specify 2.0 software).

For Section 8-19. Diagnostics replace pages:

8-185 through 8-194

▶CHANGE 7 cont.

Page 8-267, Figure 8-29. A3 NLD/Modem Schematic Diagram (Sheet 2 of 2)
Change C11 from 11 uf to 15 uf

Change C12 from 15 uf to 6.8 uf

CHANGE 8

Page 6-79, Table 6-2. 4945A Replaceable Parts
Change U302 to read as follows:

18162-10002, CD=1, QTY= 1, HP-IB PROM, Mfr Code 28480,
Mfr P/N 18162-10002

Page 8-80, HP-IB SA LOOP A
Change the signatures for U102 to read as follows:

U102- 2= U478
3= 3H17
4= 127C
5= 6P61
6= 25PC
7= H275
8= 362P
9= 04HH

Page 8-80, HP-IB FREE RUN SA LOOP
Change the signatures for JU501 to read as follows:

JU501- 1= PF91
2= F878
3= U5C6
4= 1PF7
5= 9126
6= 5FPA
7= 14P1
8= HP62

CHANGE 9

Page 6-79, Table 6-2. 4945A Replaceable Parts
Change U302 to read as follows:

18162-10003, CD=2, Qty= 1, HP-IB PROM, Mfr Code 28480,
Mfr P/N 18162-10003

CHANGE 9 cont.

Page 8-80, HP-IB SA LOOP A
Change the signatures for U102 to read as follows:

U102- 2= U478
3= 3H17
4= 127C
5= 6P61
6= 25PC
7= H275
8= 362P
9= 04HH

Page 8-80, HP-IB FREE RUN SA LOOP
Change the signatures for JU501 to read as follows:

JU501- 1= H77P
2= C9PF
3= UC35
4= 6H24
5= HCF6
6= 8U1U
7= 6U48
8= U647

▶CHANGE 10

18162A Pods with serial prefix 2442A have new 2.0 software. The Signature Analysis and troubleshooting information for this version is incorporated when CHANGE 7 of this change sheet is done.

Page 6-79, Table 6-2. 4945A Replaceable Parts
Change U302 to read as follows:

18162-10004, CD= 3, Qty= 1, HP-IB PROM, Mfr Code 28480,
Mfr P/N 18162-10004

CHANGE 11

Page 6-80, Table 6-2. 4945A Replaceable Parts
Change U403 to read as follows:

18163-10002, CD=2, QTY= 1, RS232 PROM, Mfr Code 28480,
Mfr P/N 18163-10002

Page 8-80, RS232 Free Run SA Loop
Change the signatures for JU201 to read as follows:

	WITH RAM		W/O RAM
JU201-	1= C54H	JU201-	1= CFHA
	2= 7618		2= 7618
	3= C7FC		3= CP5F
	4= 82HA		4= 82HA
	5= FU3C		5= FU3C
	6= HF6F		6= HF6F
	7= 00C8		7= 00C8
	8= C8AF		8= C8AF

▶CHANGE 12

18163A Pods with serial prefix 2442A have new 2.0 software. The Signature Analysis and troubleshooting information for this version are incorporated when CHANGE 7 of this change sheet is done.

Page 6-80, Table 6-2. 4945A Replacable Parts
Change U403 to read as follows:

18163-10003, CD= 3, QTY= 1, RS232 PROM, Mfr Code 28480,
Mfr P/N 18163-10003

▶CHANGE 13

18165A Pods with serial prefix 2442A have new 2.0 software. The Signature Analysis and troubleshooting information for this version are incorporated when CHANGE 7 of this change sheet is done.

Page 6-82, Table 6-2. 4945a Replaceable Parts
Change U301 to read as follows:

18165-10002, CD= 4, Qty= 1, HP-IL PROM, Mfr Code 28480,
Mfr P/N 18165-10002

RS-232C Capabilities:	Bit Rates: 50, 75, 110, 150, 300, 600, 1200, 2400, 4800, 9600 bps. Asynchronous half or full duplex. 7 or 8 bit word. Parity: none, odd, even mark or space.
HP-IL Capabilities:	R, AH, SH, D, T1-T5, L1, AA1, C0, DC2, DT0, PP1, SR2, RL2, PD0, DD0
Termination Impedance: (receiver and transmitter)	135, 600, 900 or 1200 ohm
Hold Circuits:	Two circuits, each independent; > 20 mA for applied open circuit voltages from 42.5 to 105 volts dc, either polarity, through an external resistance of <=1700 ohms. Nominal: 23 mA, 48 V, 1300 ohms.
Return Loss: (receiver and transmitter)	>20 dB from 20 Hz to 110 kHz >30 dB from 800 Hz to 110 kHz at 135 ohms >30 dB from 200 Hz to 20 kHz
Bridging Loss: (receiver)	< 0.2 dB
Longitudinal Balance: (receiver and transmitter)	>90 dB, 50 Hz to 120 Hz decreasing 6 dB per octave above 120 Hz
Maximum dc blocking:	150 volts

Transmitter Frequency

Range:	20 Hz to 110 Hz; selected by keypad or six programmable steps.
Resolution:	1 Hz from 20 Hz to 9999 Hz 10 Hz from 10 kHz to 110 kHz
Accuracy:	± .01 % of output frequency
Sweep:	Automatic (single or repetitive) or manual.
Step Size:	Automatic: Programmable from 10 Hz to 10 kHz. Manual: Selectable 10, 50, 100, 1000 Hz.
Step Rate:	0.3, 1, or 3 steps per second.
SF Skip:	Skips a band from 2450 to 2750 Hz
Holding Tone:	1004 Hz ± 0.1 Hz

Transmitter Level

Range: -60 to +13 dBm (600, 900, 1200 ohm)
-60 to +5 dBm (135 ohm)

Resolution: 0.1 dB

Accuracy: ± 0.1 dB at 1004 Hz, -20 to 0 dBm ± 0.2 dB at 1004 Hz, -60 to +10 dBm

Flatness:

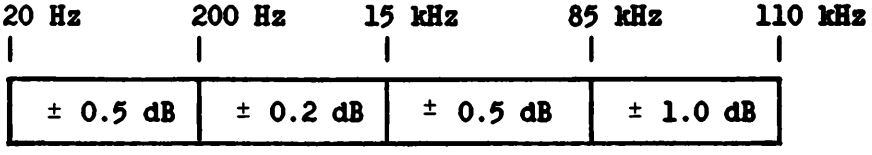

Flatness is not specified below 200 Hz when using the 135 ohm termination.

Total Distortion: 100 Hz to 3 kHz, >= 50 dB down from fundamental, measured in 3 dB bandwidth up to 12 kHz (for signal levels -40 dBm to +10 dBm)

3 kHz to 20 kHz, >=40 dB down from fundamental, measured in 3 dB bandwidth up to 80 kHz (for signal levels -40 dBm to +10 dBm)

20 kHz to 110 kHz, >=40 dB down from fundamental, measured in 3 dB bandwidth up to 440 kHz (for signal levels -30 dBm to +10 dBm)

Receiver Frequency

Range: 20 Hz to 110 kHz

Resolution: 1 Hz from 20 Hz to 9999 Hz 10 Hz from 10 kHz to 110 kHz

Accuracy: for signal levels > -50 dBm at > 20 dB signal-to-noise ratio

1 Hz from 20 Hz to 9999 Hz

10 Hz from 10 kHz to 110 kHz

Receiver Level

Range:	-60 to +13 dBm
Resolution:	.1 dB
Detector:	full wave average
Accuracy (in dB):	-50 dBm to +13 dBm

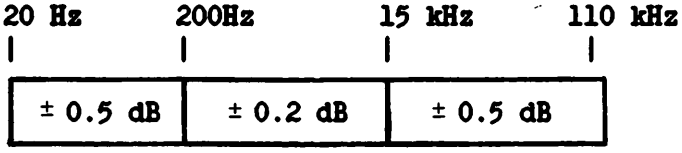

-60 dBm to -50 dBm

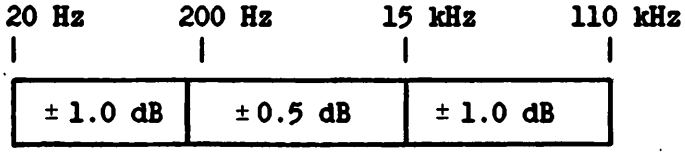

1004 Hz holding tone accuracy is ± 0.1 dB from -20 to 0 dBm

accuracy is not specified below 200 Hz when using the 135-ohm termination

Filters Available: 60 Hz highpass
10 kHz lowpass (Voiceband Limit)

MESSAGE CIRCUIT NOISE MEASUREMENT

Transmitter:	quiet termination

Receiver

Weighting Filters:	C-message, 3 kHz flat, 15 kHz flat, 50 kbit or Program
Range:	+10 to +90 dBrn
Resolution:	1 dB
Accuracy:	± 1 dB
Detector:	True rms

NOISE WITH TONE MEASUREMENT

Transmitter

Frequency:	1004 Hz (fixed)

Receiver

Weighting Filters:	C-message, 3 kHz flat, 15 kHz flat, 50 kbit or Program
Notch Filter:	>60 dB rejection from 995 to 1025 Hz
Range:	+10 to +90 dBrn
Resolution:	1 dB
Detector:	True rms
Accuracy:	± 1 dB

SIGNAL-TO-NOISE MEASUREMENT

Transmitter

Frequency:	1004 Hz (fixed)

Receiver

Weighting Filters:	C-message, 3kHz flat, 15 kHz flat, 50 kbit or Program
Notch Filter:	> 60 dB rejection from 995 to 1025 Hz
Ratio Range:	10 dB to 45 dB
Resolution:	1 dB
Signal level range:	-40 to +13 dBm at 600, 900, and 1200 ohms. -34 to +13 dBm at 135 ohms.
Accuracy:	+ or - 1 dB (10 dB to 40 dB) + or - 2 dB (41 dB to 45 dB)
Detector:	full wave average and true rms

NOISE-TO-GROUND MEASUREMENT

Transmitter:	**quiet termination**

Receiver

Weighting Filters:	**C-message, 3 kHz flat, 15 kHz flat 50 kbit or Program**
Range:	**40 to 130 dBrn (C-Message, 3 kHz) 50 to 130 dBrn (Program, 15 kHz, 50 kbit)**
Resolution:	**1 dB**
Accuracy:	**± 1.5 dB**
Detector:	**True rms**

INTERMODULATION DISTORTION MEASUREMENT

Transmitter

Signal Spectrum:	4 tone, non-linear distortion 2-tone, noise check
Level Range:	**-40 dBm to 0 dBm (not specified at 135 ohms**

Receiver

Signal Level Range:	**-40 dBm to 0 dBm**
Resolution:	**1 dB**
Accuracy:	**± 1 dB**
Filters:	**Second order centered at 520 Hz and 2240 Hz Third order centered at 1900 Hz**
Distortion Range:	**10 to 55 dB (not specified at 135 ohms)**

PEAK TO AVERAGE RATIO MEASUREMENT (P/AR)

Transmitter

Signal Spectrum:	meets Bell System PUB 41009 and IEEE Std 743-1984.
Level Range:	-40 to 0 dBm
Level Resolution:	0.1 dB

Receiver

Signal Level Range:	**-40 to 0 dBm**
P/AR Range:	**0 to 120 units**
Accuracy:	**± 2 P/AR units over range of 40 to 110 units** **± 4 P/AR units elsewhere**
Resolution:	**1 P/AR unit**

PHASE AND AMPLITUDE JITTER MEASUREMENTS

Transmitter

Frequency:	**1004 Hz (fixed)**

Receiver

Level Range:	**-40 to +10 dBm**
Bandwidths:	**20 to 300 Hz, 4 to 20 Hz and 4 to 300 Hz**
Phase Jitter:	0.0 to 30.0 degrees peak-to-peak, + or - 5 percent of reading plus + or - 0.5 degrees peak-to-peak.
Amplitude Jitter:	0.0 to 30.0 percent peak-to-peak, + or - 5 percent of measured value plus + or - 0.5 percent of peak.
Outputs:	**Demodulated carrier and jitter available**

TRANSIENTS MEASUREMENT

Transmitter

Frequency:	**1004 Hz (fixed) and quiet termination are selectable**

Receiver

Holding Tone:	995 Hz to 1025 Hz: -40 dBm to 10 dBm at 600, 900, and 1200 ohms. -34 dBm to 10 dBm at 135 ohms.
Count Rate:	**7, 8 or 100 counts per second**
Count Range:	**0 to 9999 for all count indicators**
Timer:	**1 to 9,999 minutes, or continuous**

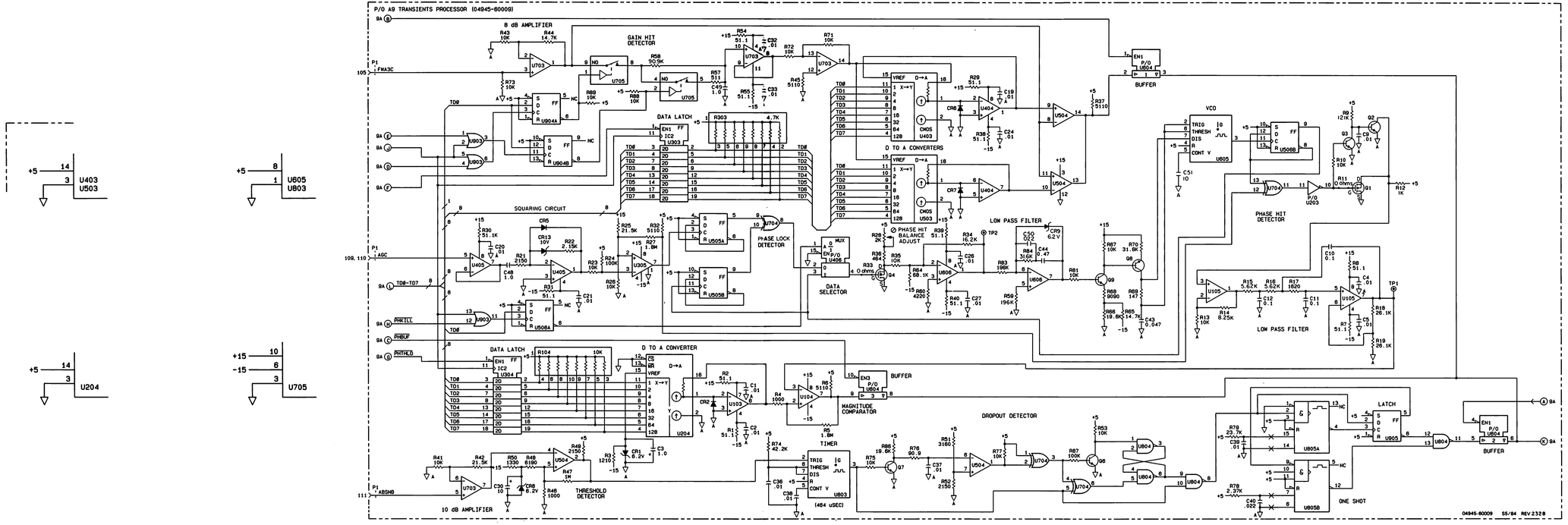

Figure 8-41. A9 Transients Detector Schematic Diagram (Sheet 2 of 2)
Replacement for page 8-299

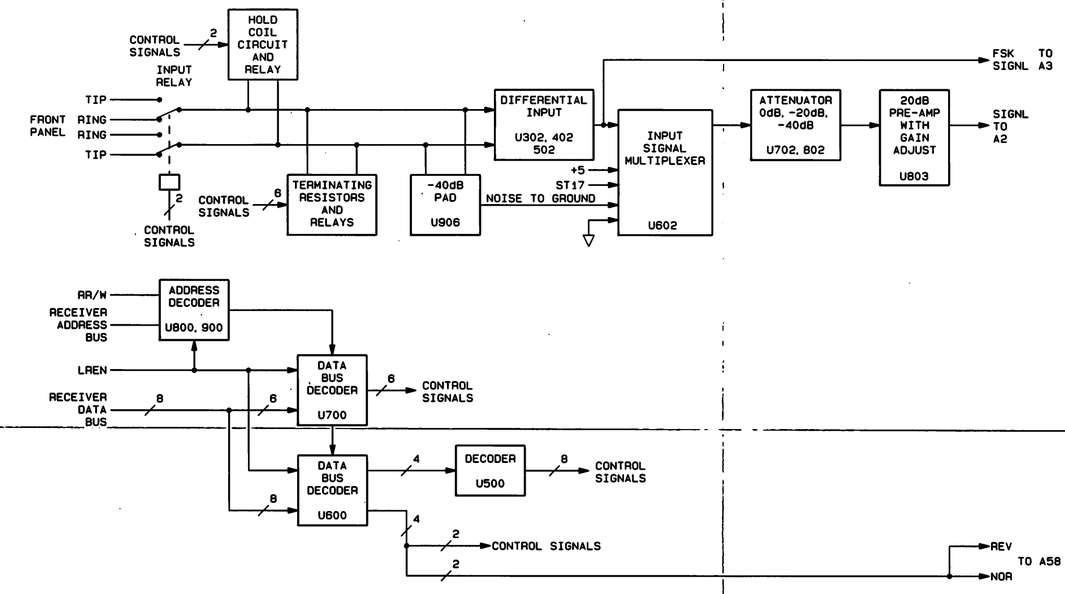

A1

Figure 8-24. A1 Receiver Input Block Diagram

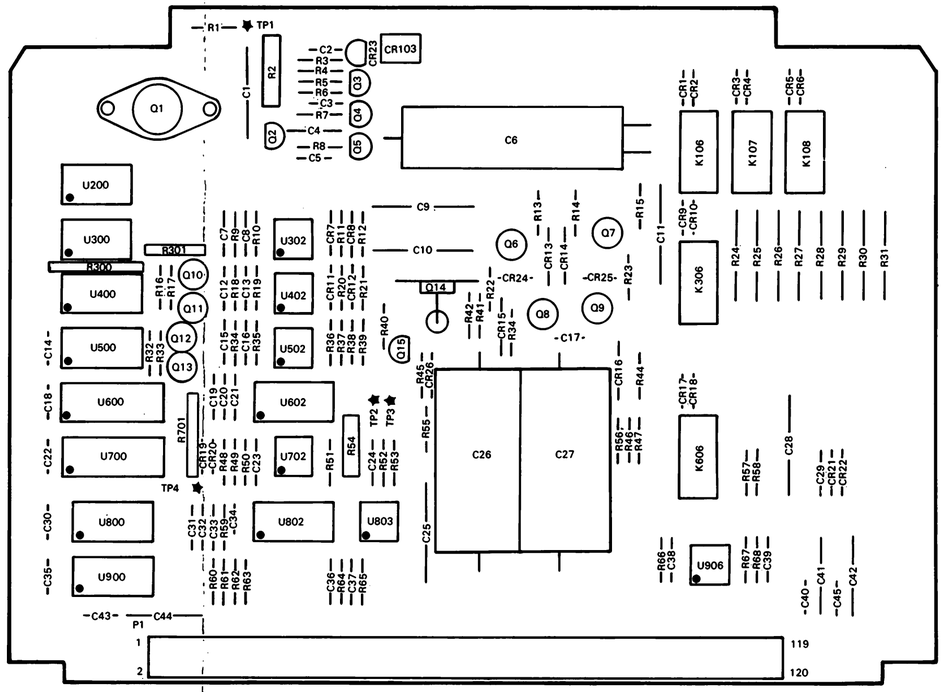

04945-60001 0-5/84 REV B2328

Replacement for page 8-250

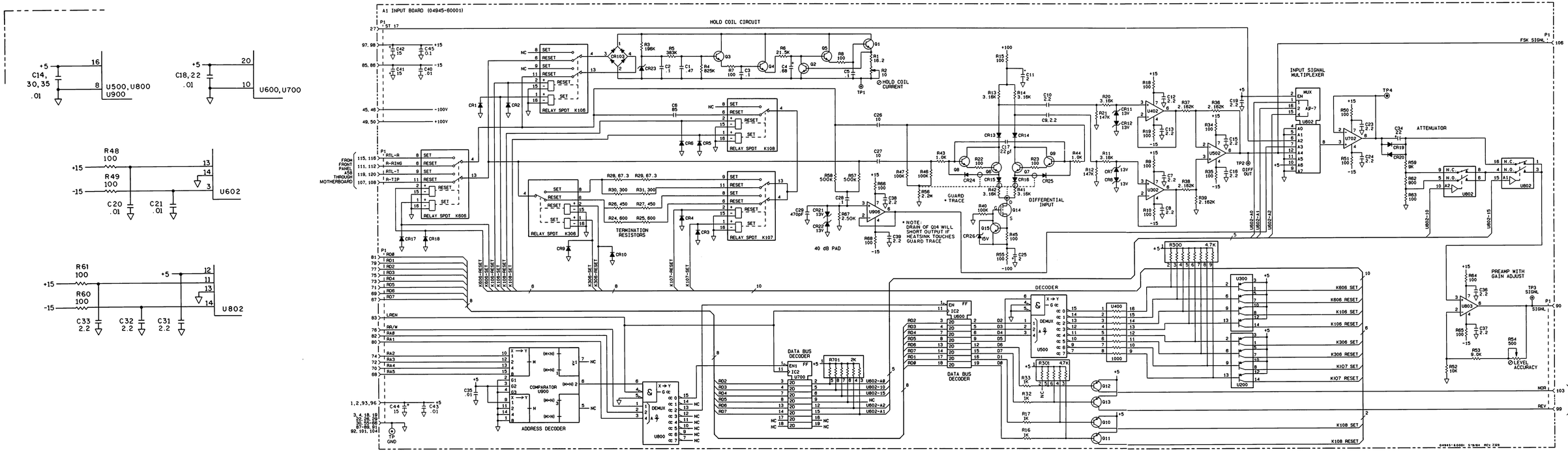

Figure 8-25. A1 Receiver Input Schematic Diagram

Replacement for page 8-251

When a rapid gain hit occurs, one of the thresholds is exceeded because the RC network slows the reference voltage generator's response to the change. This causes the comparator output to go low and the transients processor to detect the hit at the buffer output. Once the hit has been detected, switch U705 opens so that the reference voltage stays fixed at its old level until the hit qualifies. When the hit either qualifies or fails to qualify, both of the U705 switches are closed to quickly re-establish reference with the new level. After the appropriate blanking interval, the second switch is reopened and the cycle begins again. The long RC time constant is specified by the dynamic response characteristic outlined by the IEEE specifications and the short RC time constant (with both switches closed) must be less than 6 ms in order to count gain hits at 100 counts per second.

Phase Hit Detector

Phase hits are detected by a digital pulse width measuring circuit coupled with an analog phase-locked loop. The .775 V rms sine wave input (AGC) is squared (U405), shifted to TTL levels and then divided by two (U505) before application to the phase detector (U704). The divide by two is essential in keeping the loop stable over a full 360 degree phase range. The phase detector is an exclusive OR gate that compares the input signal to a loop feedback signal. The phase detector output is a pulse that goes to a data selector (U406). In normal operation, the divided input signal from U704 is selected. The second U406 input is selected to see if a phase hit qualifies. This signal is the undivided loop feedback signal. The TTL signal from U406 is level shifted to equal + and - levels which are applied to a loop lowpass filter U606. The low-pass filter gives a loop bandwidth of 100 radians per second. The filter output drives the voltage-controlled oscillator U605. Q8 and Q9 linearize the VCO's response to phase. The VCO operates at four times the input frequency. The VCO output goes to a divide by two circuit (U506) which changes the VCO output to a square wave. This is also where the loop feedback signal comes from. Q5 is used to correct the VCO output signal.

The output of U506 goes to another phase detector (U704) where it is compared with the undivided input signal from U305. The resulting pulse (phase difference) goes through a limiting circuit (Q1, Q2 and Q3) to limit large phase hits. The signal goes through a low pass filter which passes the dc value of the phase detector. This dc value is proportional to the phase offset. The phase detector phase offset goes to comparator U104. Here it is compared to a dc reference that is set by the transients processor. This dc reference is the phase limit set from the front panel.

Phase hit outputs from U104 are sent on bit 7 of the transients data bus.

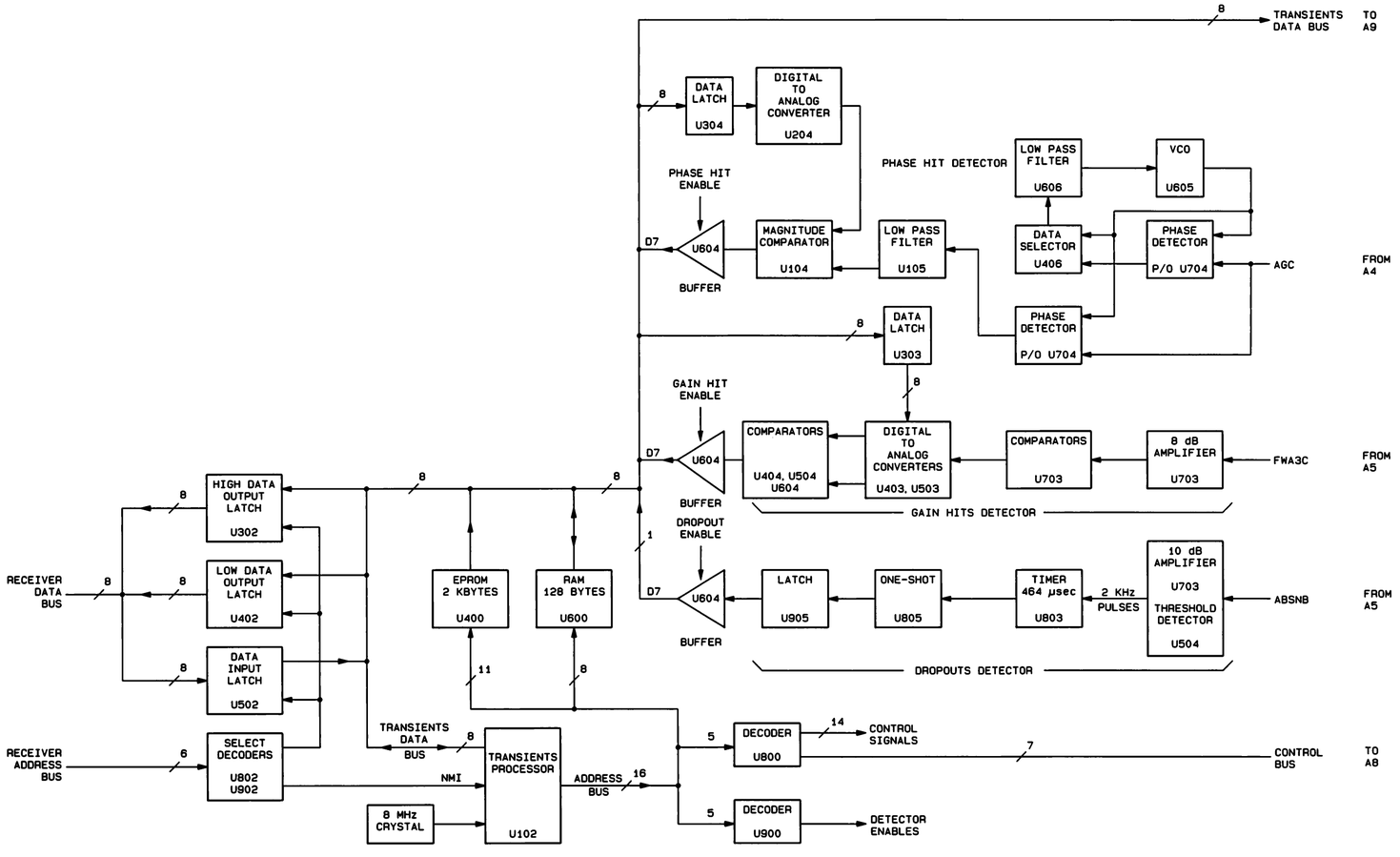

Figure 8-40. A9 Transients Detector Block Diagram

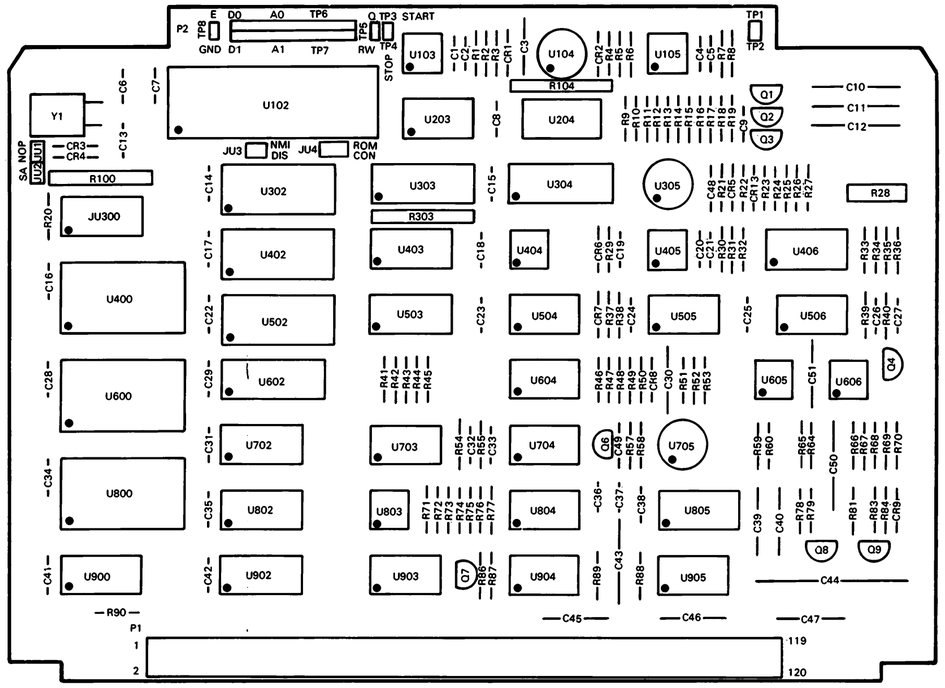

04945-60009 0-5/84 REV B2328

Replacement for page 8-296

8-59. NLD/Modem (A3)

There are two separate sections on this board. One section is used for NonLinear Distortion detection and the other is used to detect and demodulate an FSK signal.

NLD Section

The input to the NLD section (IMDI) is two tone pairs centered at 860 Hz and 1380 Hz. The 860 Hz pair is separated by 6 Hz and the 1380 Hz pair is separated by 16 Hz. So you have 857 Hz and 863 Hz as one pair and 1372 Hz and 1388 Hz as the other pair.

The NLD detection circuit is looking for the second and third harmonic distortion products of the two tone pairs.

The two tone pairs come from the 10 kHz low pass filter on A2. They are applied to notch filters centered at 860 Hz and 1380 Hz (U504 and U505). The notch filters attenuate the tone pair fundamentals at least 30 dB.

The resulting signal then goes to a 30 dB amplifier (607 and U608) . This amplifier can be bypassed.

The tone pairs also go to two tone detectors (U100 and U302). These detect whether the input signal is an IMD signal or a check signal. This information is fed back to the receiver processor through latch U700. If only one tone pair is detected, its a check signal. If both tone pairs are detected then its an IMD signal.

The anti-aliasing filter is two low pass filter sections (one at 1.5 kHz and the other at 2.44 kHz) and two switchable notch filters at 2940 Hz and 3280 Hz. These filters eliminate the undesired frequencies that might appear in the passband after the mixer. The notch filter selected depends on the frequency from the Mixing Frequency Generator (either 2420 Hz, 2760 Hz or 0 Hz). The mixing frequency is selected through the receiver data bus.

From the mixer, the distortion signal goes to a four-stage bandpass filter and then to the wideband autorange amplifier on A4 where the rms detector is used to measure the distortion level.

Modem Section

The modem section detects and demodulates the FSK signal. The input signal (FSK SIGNL) comes from the differential amplifier on A1. An AGC circuit (U300 and VR1) boosts the level of the FSK signal. The 1kHz bandpass filter (U201) eliminates noise from the two FSK tones. After filtering, the FSK detector/demodulator (U402) decodes the FSK code into digital signals. A 1990 Hz tone detector (U101) is used to detect the pilot tone.

When the FSK tones are present and the 1990 Hz pilot tone is present, then the FSK detect signal is enabled (FSKS). The demodulated FSK signal (FSKD) goes to A14.

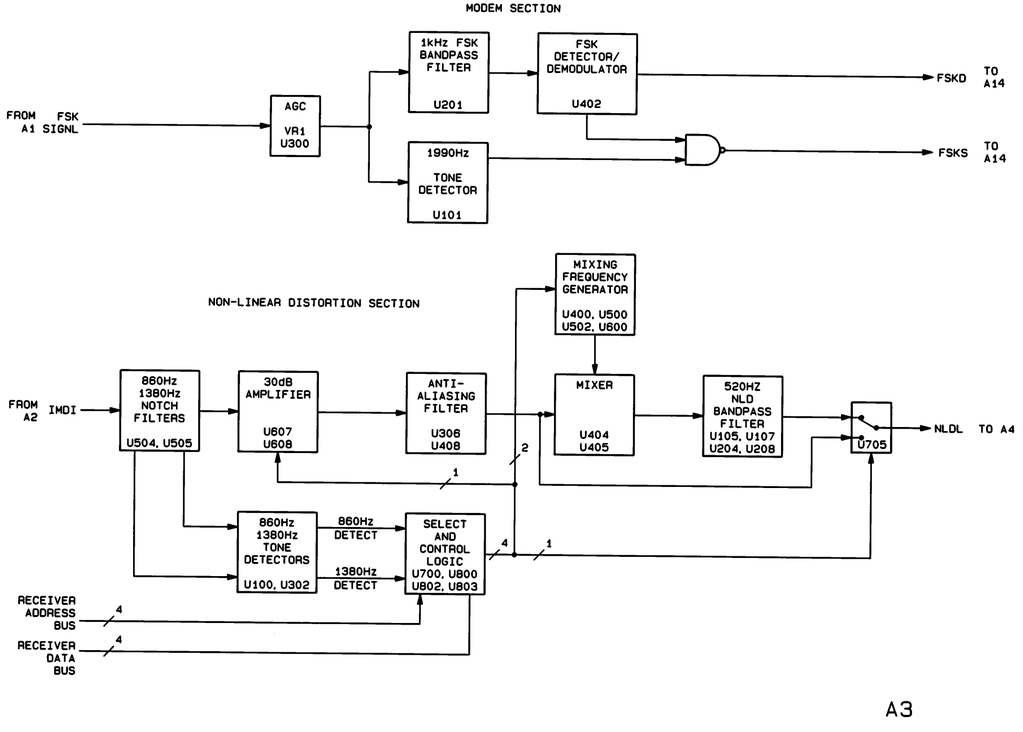

Figure 8-28. A3 NLD/Modem Board Block Diagram

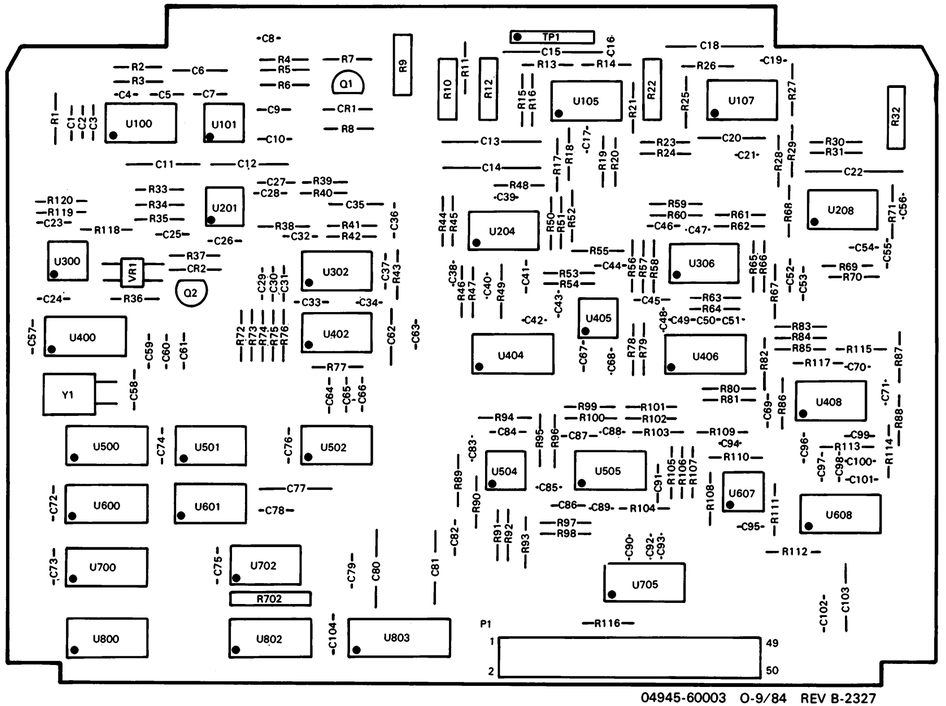

04945-60003 O-9/84 REV B-2327

Replacement for page 8-264

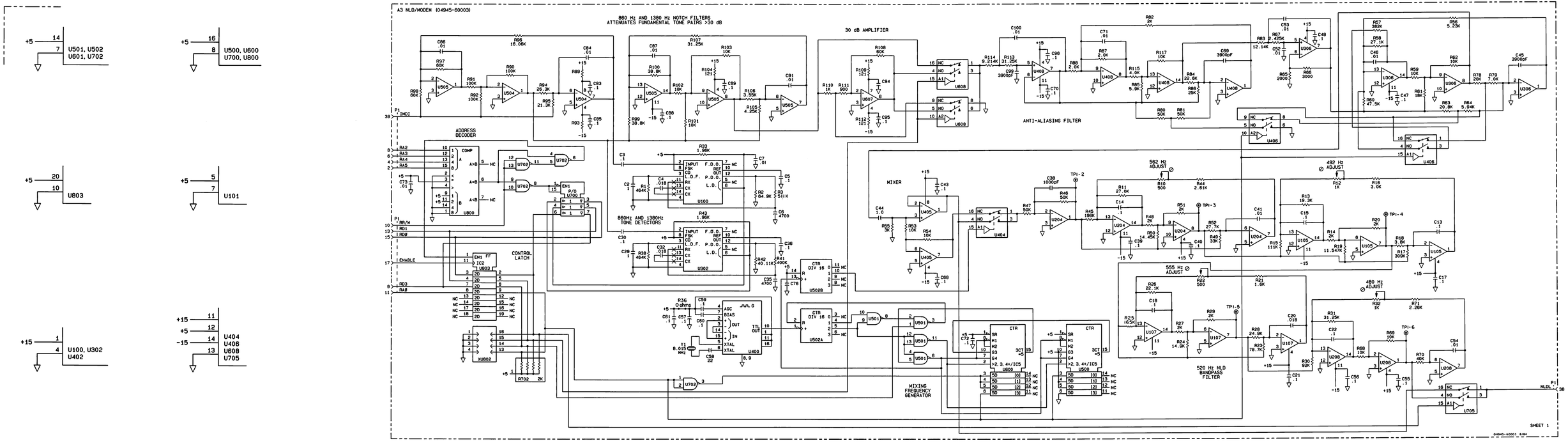

Figure 8-29. A3 NLD/Modem Schematic Diagram (Sheet 1 of 2)
Replacement for page 8-265

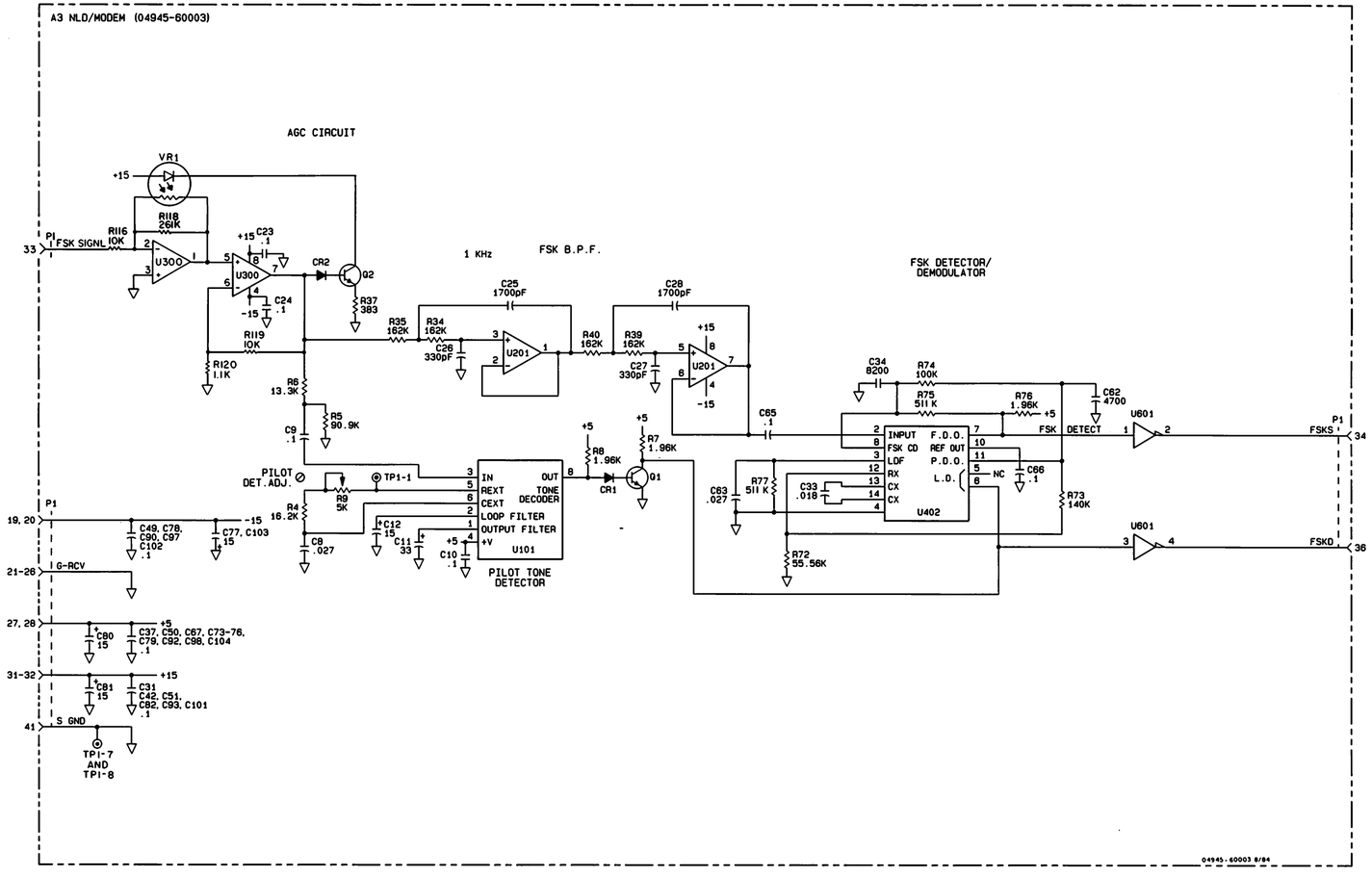

Figure 8-29. A3 NLD/Modem Schematic Diagram (Sheet 2 of 2)
Replacement for page 8-267

8-60. Autorange Amplifier (A4)

The autorange amplifier board has two variable gain amplifiers (wideband and narrowband) which bring the signal level to a range where the detectors and other signal processing circuits can function accurately. The gain of each autorange amplifier is adjustable in 10dB increments over a range of -10dB to +60dB gain. Multiplexers (U804 and U806) at the inputs of the board switch various filters and self-check signals into the amplifiers. In the narrowband amplfier, there is a programmable fine attenuator (U102, U104) which is used for a fine adjust of the output level for that amplifier.

The two amplfiers on the A4 board are the wideband autorange amplifier intended for operation over the entire frequency range of the instrument, and the narrowband autorange amplifier only for voice band (less than 10 kHz) frequencies. A programmable fine attenuator is used for precisely controlling the level into some of the signal processing circuits. A 140 kHz low pass filter (the wideband filter) is used for limiting the bandwidth to the frequency measuring circuits and the detectors. The board also has data latches (U202, U302 and U402), control latches (U502 and U603), and address decoding circuits (U702 and U802).

Autorange Control

Software routines are used to adjust the gain of the autorange amplifier so that the signal is amplified to the proper level for the measurement circuits. The autorange routine has several modes of operation, each of which is intended for a class of possible input signal types.

The autorange routine adjusts the amplifier gains so that the rms, average or peak value of the input signal is within a specified voltage range. The routine determines whether the gain is correct or needs to be adjusted higher or lower, and it senses overrange and underrange conditions at the analog to digital converter.

There are several software tables which contain information on how the software drives the hardware.

Normal Operation

When the autorange routine is called, the full wave average wideband detector, ranging on detector outputs, tracking adc mode, and detector settling time are all set for manual operation. The initial gain of the wideband channel is 0 dB. The following sequence occurs.

1. The autorange routine waits for the detector output to settle to an accuracy suitable for ranging. The wait time is in a software table.

SECTION V
ADJUSTMENTS

5-1. INTRODUCTION

This section describes adjustments and checks used to return the instrument to its specifications after repairs have been made.

Normally, adjustments need to be made only if the board that the adjustment is on has been changed or repaired.

See paragraph 1-10, Recommended Test Equipment, in Chapter 1 for a list of equipment used to properly service the HP 4945A.

Table 5-1 gives a summary of the HP 4945A adjustments.

See Figure 5-1 for adjustment locations.

5-2. SAFETY CONSIDERATIONS

WARNING

ADJUSTMENTS ARE PERFORMED WITH POWER APPLIED TO THE INSTRUMENT, AND PROTECTIVE COVERS REMOVED. SUCH MAINTENANCE SHOULD BE PERFORMED ONLY BY SERVICE TRAINED PERSONNEL WHO ARE AWARE OF THE HAZARDS; INVOLVED FOR EXAMPLE, FIRE AND ELECTRICAL SHOCK). WHERE MAINTENANCE CAN BE PERFORMED WITHOUT POWER APPLIED, THE POWER SHOULD BE REMOVED.

READ THE SAFETY SUMMARY AT THE FRONT OF THIS MANUAL BEFORE MAKING ANY ADJUSTMENTS.

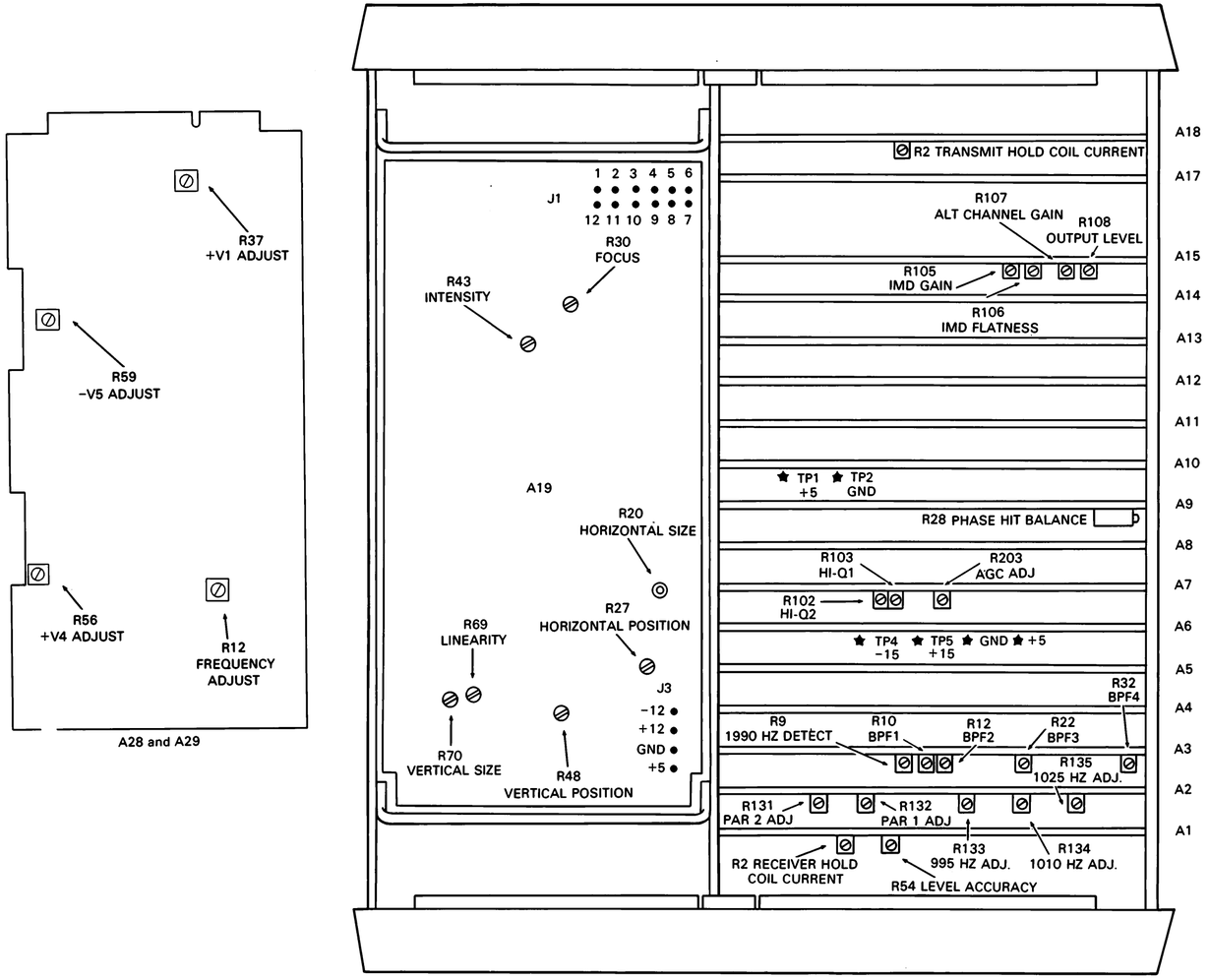

Figure 5-1. Adjustment Locations
Replacement for page 5-2

Table 5-1. Adjustment Summary

Power Supply Adjustments

These adjustments are on both the A28 and A29 power supplies.

Adjustment	Component	Specifications A28	Specifications A29
Frequency	R12	142.86 kHz	142.86 kHz
+V1	R37	+5V +-10 mV	+5V +-10 mV
+V4	R56	+15V +-100 mV	+12V +-100 mV
-V5	R59	-15V +-100 mV	-12V +-100 mV

Transmitter Adjustments

Adjustment	Component	Specifications
NLD Tone Balance	A15R106	Same voltage for 860 Hz and 1380 Hz at U606 pin 16
NLD Gain (Level)	A15R105	Same voltage at U103 pin 12 and U606 pin 16
Alternatel Channel (level)	A15R107	4.85 V rms +-.5 mv
Hold Coil	A18R2	23 ma +-.1 ma
Transmitter Level Accuracy	A15R108	Set voltage between tip and ring to 4.238 V trms at 900 ohms

TABLE OF CONTENTS

SECTION I: GENERAL INFORMATION

Page

1-1. Introduction 1-1
1-2. Description 1-2
1-3. Safety Considerations 1-2
1-4. Instruments Covered By This Manual 1-3
1-5. Interfaces 1-3
1-6. Accessories Supplied 1-3
1-7. Accessories Available 1-4
1-8. Options 1-4
1-9. Specifications 1-4
1-10. Recommended Test Equipment 1-12
1-11. Service Kit 1-14
1-12. Cleaning and Handling Precautions..... 1-15

SECTION II: INSTALLATION

2-1. Introduction 2-1
2-2. Initial Inspection 2-1
2-3. Power Requirements 2-1
2-4. Power Cable 2-3
2-5. Operating Environment 2-5
2-6. Packaging 2-5

SECTION III: OPERATION

Refer to the HP 4945A Operating and Programming Manual.

TABLE OF CONTENTS (con't)

SECTION IV: PERFORMANCE TESTS

		Page
4-1.	Introduction	4-1
4-2.	Power-On Self Check	4-1
4 3.	Recommended Test Equipment and Accessories	4-2
4-4.	Transmitter Level and Frequency Test	4-3
4-5.	Transmitter Level Distortion Test	4-6
4-6.	Transmitter Hold Coil Current Test	4-8
4-7.	Receiver Hold Coil Current Test	4-9
4-8.	Receiver Level and Frequency Test	4-10
4-9.	Filter Tests	4-12
4-10.	50 Kilobit Filter Response Test	4-13
4-11.	15 kHz Filter Response Test	4-14
4-12.	3 kHz Filter Response Test	4-15
4-13.	1010 Hz Notch and 15 kHz Filter Response Test	4-16
4-14.	Program Filter Response Test	4-17
4-15.	C-Message Filter Response Test	4-18
4-16.	Receiver Passive Return Loss Test	4-19
4-17.	Transmitter Passive Return Loss Test	4-21
4-18.	Transmitter Longitudinal Balance Test	4-22
4-19.	Receiver Balance	4-25
4-20.	Noise To Ground Test	4-28
4-21.	Message Circuit Noise (No Holding Tone)	4-30
4-22.	Noise With Tone (Notch Noise)	4-31
4-23.	Intermodulation Distortion	4-33
4-24.	Peak-To-Average Ratio	4-35
4-25.	Amplitude Jitter	4-36
4-26.	Phase Jitter	4-41
4-27.	Phase Hits	4-46
4-28.	Gain Hits	4-48
4-29.	Dropouts	4-50
4-30.	Impulse Noise	4-52
4-31.	Envelope Delay Tests	4-56
4-32.	Transmitter Amplitude Modulation	4-56
4-33.	Transmitter Modulation Frequency	4-58
4-34.	Transmitter Level and Flatness	4-59
4-35.	Envelope Delay Receiver Test	4-61
4-36.	Two-Wire Return Loss	4-62
4-37.	Four-Wire Return Loss	4-64
4-38.	Receiver Holding Circuit Impedance	4-66

SECTION V: ADJUSTMENTS

		Page
5-1.	Introduction	5-1
5-2.	Safety Considerations	5-1
5-3.	Power Supply Adjustments	5-4
5-4.	DC Calibration Procedure	5-5
5-5.	Clock Circuit Calibration	5-5
5-6.	+V1 Clock Modulation	5-5
5-7.	+V4 Output Calibration	5-5
5-8.	-V5 Output Calibration	5-6
5-9.	+V1 Over-voltage Shutdown	5-6
5-10.	+V4 Over-voltage Shutdown	5-7
5-11.	-V5 Over-voltage Shutdown	5-7
5-12.	AC Calibration Procedure	5-8
5-13.	Clock Frequency Adjustment	5-8
5-14.	+V1 Adjustment (+5 volt)	5-8
5-15.	+V4 Adjustment	5-9
5-16.	-V5 Adjustment	5-9
5-17.	Transmitter Adjustments	5-10
5-18.	Level Accuracy	5-10
5-19.	NLD Tone Balance and Level (Primary Method)	5-10
5-20.	NLD Balance (Alternate Method)	5-11
5-21.	Alternate Channel Level (Primary Method)	5-11
5-22.	Alternate Channel Level (Alternate Method)	5-12
5-23.	Hold Coil Current For Transmitter and Receiver	5-12
5-24.	Receiver Adjustments	5-12
5-25.	Level Accuracy	5-12
5-26.	1010 Hz Notch Filter	5-13
5-27.	P/AR Filter	5-13
5-28.	US EDD Hi-Q Filters (3 Hz Modulation)	5-14
5-29.	US EDD AGC	5-14
5-30.	Phase Hit Balance	5-15
5-31.	NLD 1990 Hz Detector	5-15
5-32.	NLD 520 Hz Bandpass Filter	5-15
5-33.	Two-Wire Return Loss	5-16
5-34.	Real Time Clock Oscillator	5-16
5-35.	Display Adjustments	5-17
5-36.	Yoke Adjustment	5-18

TABLE OF CONTENTS (cont)

SECTION VI: REPLACEABLE PARTS

Page

6-1. Introduction 6-1
6-2. Exchange Assemblies 6-1
6-3. Abbreviations 6-1
6-4. Ordering Information 6-1
6-5. Direct Mail Order System 6-2
6-6. Torques For Hardware 6-4
6-7. Power Supply Removal 6-5
6-8. CRT Removal 6-11
6-9. CRT Installation 6-11
6-10. Front Panel Removal 6-12
6-11. Front Panel 310 Connector Precaution 6-14
6-12. Rear Panel Component Access 6-15
6-13. Replaceable Parts List 6-15

SECTION VII: MANUAL CHANGE

7-1. Introduction 7-1

SECTION VIII: SERVICE

8-1. Introduction 8-1
8-2. Safety Considerations 8-1
8-3. Grid Locators 8-2
8-4. Logic Symbology 8-3
8-5. Transmission Impairment Measurements 8-6
8-6. Service Sheet Organization 8-13
8-7. Block Diagram Description 8-13

SECTION VIII: TROUBLESHOOTING

8-8. Power-On Self Check 8-20
8-9. Power-On Self Check Troubleshooting 8-24
8-10. Keycode Troubleshooting 8-31
8-11. Display Troubleshooting 8-33
8-12. Transmitter Troubleshooting (A14, A15) 8-35
8-13. Digital Troubleshooting (Signature Analysis) 8-36
8-14. System Processor SA Theory (A11, A12, A13) 8-38
8-15. Receiver Processor SA Theory (A1 - A10) 8-46
8-16. System Processor SA Tables (A11, A12, A13) 8-50
8-17. Receiver Processor SA Tables (A10, A9, A1 - A8) 8-63
8-17a. Power Supply Troubleshooting 8-78a
8-17b. Isolation Procedure 8-78f
8-18. Interface Troubleshooting 8-79

TABLE OF CONTENTS (cont)

SECTION VIII: SERVICE

		Page
8-19.	Diagnostics	8-91
8-20.	Running the Diagnostics	8-93
8-21.	Mode 1:Detector Digital and ADC Check (A5)	8-95
8-22.	Mode 2: Detector Calibration Check (A5)	8-107
8-23.	Mode 3: Basic Transmitter Check (A5, A15)	8-112
8-24.	Mode 4: Wideband Autorange Amplifier Check (A14, A15, A17)	8-120
8-25.	Mode 5: Narrowband Autorange Amplifier Check (A14,A15,A17)	8-123
8-26.	Mode 6: Frequency Counter and Crystal Check, (A14,A17,A8)	8-127
8-27.	Mode 7: Transmitter Single Tone Check (A14,A15,A17,A8)	8-134
8-28.	Mode 8: Transmitter Multi-tone Check (A14, A8)	8-141
8-29.	Mode 9: Transmitter Filter Sweep (A15)	8-145
8-30.	Mode 10: Transmitter Alternate Channel Check (A17)	8-149
8-31.	Mode 11: Wideband Filter Calibratiion (A2)	8-154
8-32.	Mode 12: A2 Filter Sweeps (A2)	8-155
8-33.	Mode 13: A2 Filter Checks Continued (A2)	8-160
8-34.	Mode 14: A1 and A18 Check	8-166
8-35.	Mode 15: IMD Hardware Check (A3)	8-170
8-36.	Mode 16: IMD Filter Calibration (A3)	8-176
8-37.	Mode 17: Jitter Digital and Phase Lock Loop Check (A6)	8-178
8-38.	Mode 18: Jitter Calibration (A6)	8-185
8-39.	Mode 19: Envelope Delay Hardware Check (A7)	8-195
8-40.	Mode 20: Envelope Delay Calibration	8-203
8-41.	Mode 21: Transient Measurements Check (A9)	8-206
8-42.	Mode 22: A3 FSK Demodulation Check	8-214
8-43.	Performance Verification and Service Aid Modes	8-219
8-44.	Mode 46: Filter Response Checks	8-219
8-45.	Mode 47: DC Offset Settling Time (Narrowband)	8-221
8-46.	Mode 48: DC Offset Settling Time (Wideband)	8-221
8-47.	Mode 49: Filter Path Check	8-222
8-48.	Mode 50: Super P/AR	8-223
8-49.	Mode 51: Receiver Troubleshooting	8-223
8-50.	Mode 52: IMD Relative Tone Adjustment	8-224
8-51.	Processors/Memory Section	8-225
8-52.	System Processor (A11)	8-225
8-53.	System Memory (A12)	8-235
8-54.	Receiver Processor (A10)	8-240
8-55.	Front Panel Decoder (A25)	8-244
8-56.	Receiver Section	8-247
8-57.	Receiver Input (A1)	8-248
8-58.	Filter Board (A2)	8-253
8-59.	NLD/Modem (A3)	8-263

TABLE OF CONTENTS (cont)

SECTION VIII: SERVICE **Page**

8-60. Autorange Amplifier (A4) 8-264
8-61. Detector (A5) 8-272
8-62. Jitter (A6).....8-278
8-63 US Envelope Delay (A7) 8-285
8-64. Frequency Counter (A8) 8-288
8-65. Transients Detector (A9) 8-293
8-66. Transmitter Section 8-301
8-67. Basic Transmitter Description 8-301
8-68. Transmitter Control (A14).....8-302
8-69. Waveform Generator (A15) 8-308
8-70. Active Output (A17) 8-315
8-71. Transmitter Output (A18) 8-318
8-72. Display Section 8-323
8-73. Video Generator (A13) 8-323
8-74. CRT Driver (A19) 8-330
8-75. Power Supply/Motherboard Section 8-341
8-76. Power Supply (A28, A29) 8-342
8-77. AC Mains Switching (A20) 8-344
8-78. DC Connect Board (A21) 8-345
8-79. Power Supply Test Fixtures 8-354
8-80. I/O Section 8-357
8-81. HP-IB Interface (HP 18162A) 8-359
8-82. RS-232 Interface (HP 18163A).....8-365
8-83. HP-IL Interface (HP 18165A).....8-371

LIST OF ILLUSTRATIONS

FIGURES **Page**

1-1. HP Model 4945A TIMS and Supplied Accessories 1-0
2-1. Line Voltage Selector Switch 2-3
5-1. Adjustment Locations 5-1
6-1. A28 and A21 Access Screws 6-6
6-2. A21 Cables 6-7
6-3. A29 and A20 Access Screws 6-9
6-4. A20 Cables 6-10
6-5. Front Panel Screws Accessed From Cardcage 6-13
6-6. 310 Connector Installation 6-14
6-7. HP 4945A Chassis Parts 6-87
6-8. HP 4945A PC Assembly Locations 6-88
6-9. HP 4945A Covers 6-89
8-1. Example Grid Locator 8-2
8-2. Logic Symbology Examples 8-5
8-3. P/AR Transmit Signal Frequency Spectrum 8-9
8-4. P/AR Transmit Signal Envelope 8-9
8-5. HP 4945A Block Diagram 8-12
8-6. Mode 1 Waveforms 8-106
8-7. Mode 3 Waveforms 8-119
8-8. Mode 6 Waveforms 8-133
8-9. Mode 8 Waveforms 8-144
8-10. Mode 15 Waveforms 8-175
8-11. Mode 17 Waveforms 8-184
8-12. Mode 18 Waveforms 8-194
8-13. Mode 19 Waveforms 8-202
8-14. Mode 21 Waveforms 8-213
8-15. Mode 22 Waveforms 8-218
8-16. HP 4945A Memory Map 8-227
8-17. A11 System Processor Block Diagram 8-229
8-18. A11 System Processor Schematic Diagram 8-231
8-19. A12 System Memory Block Diagram 8-235
8-20. A12 System Memory Schematic Diagram 8-237
8-21. A10 Receiver Processor Block Diagram 8-241
8-22. A10 Receiver Processor Schematic Diagram 8-243
8-23. A25 Front Panel Decoder Schematic Diagram 8-245
8-24. A1 Receiver Input Block Diagram 8-249
8-25. A1 Receiver Input Schematic Diagram 8-251
8-26. A2 Filter Board Block Diagram 8-259
8-27. A2 Filter Board Schematic Diagram 8-261
8-28. A3 NLD/Modem Board Block Diagram 8-263
8-29. A3 NLD/Modem Board Schematic Diagram 8-265
8-30. A4 Autorange Amplifier Block Diagram 8-269
8-31. A4 Autorange Amplifier Schematic Diagram 8-271
8-32. A5 Detector Block Diagram 8-275
8-33. A5 Detector Schematic Diagram 8-277
8-34. A6 Jitter Board Block Diagram 8-281
8-35. A6 Jitter Board Schematic Diagram 8-283
8-36. A7 Envelope Delay Block Diagram 8-285
8-37. A7 Envelope Delay Schematic Diagram 8-287

LIST OF ILLUSTRATIONS (cont)

FIGURES (cont) **Page**

8-38. A8 Frequency Counter Block Diagram 8-289
8-39. A8 Frequency Counter Schematic Diagram 8-291
8-40. A9 Transients Detector Block Diagram 8-295
8-41. A9 Transients Detector Schematic Diagram 8-297
8-42. A14 Transmitter Control Block Diagram 8-303
8-43. A14 Transmitter Control Schematic Diagram 8-305
8-44. A15 Waveform Generator Block Diagram 8-309
8-45. A15 Waveform Generator Schematic Diagram 8-311
8-46. A17 Active Output Block Diagram 8-315
8-47. A17 Active Output Schematic Diagram 8-317
8-48. A18 Transmitter Output Block Diagram 8-319
8-49. A18 Transmitter Output Schematic Diagram 8-321
8-50. A13 Video Generator Block Diagram 8-327
8-51. A13 Video Generator Schematic Diagram 8-329
8-52. A19 CRT Driver Block Diagram 8-333
8-53. A19 CRT Driver Schematic Diagram 8-339
8-54. Power Supply Block Diagram 8-345
8-55. A28 and A29 Power Supply Schematic Diagram 8-347
8-56. Power Supply AC and DC Interconnection Schematic Diagram.....8-349
8-57. A22 Motherboard Schematic Diagram 8-351
8-58. A58 Front Panel Connect Schematic Diagram 8-353
8-59. Passive Loading Board Schematic Diagram 8-355
8-60. Power Supply Test Fixture Schematic Diagram 8-355
8-61. A18 I/O Interface Connections 8-358
8-62. HP 18162A HP-IB Interface Schematic Diagram 8-363
8-63. HP 18163A RS-232 Interface Schematic Diagram 8-369
8-64. HP 18165A HP-IB Interface Schematic Diagram 8-375

LIST OF TABLES

TABLES **Page**

1-1. Service Kit Contents 1-14
2-1. Line Fuse Part Numbers 2-2
2-2. Power Cable Part Numbers 2-4
5-1. Adjustment Summary 5-2
6-1. Reference Designators and Abbreviations 6-3
6-2. HP 4945A Replaceable Parts 6-17
6-3. List of Manufacturer's Codes 6-85
8-63. Overall Power Supply Troubleshooting 8-78a
8-64. Verify Power Supply Problem 8-78b
8-65. Main Troubleshooting 8-78c
8-66. Control Circuits 8-78d
8-67. Protection Circuits 8-78e
8-68. Diagnostic Modes 8-92

Table 8-12. SA Program Loop 4 (2.0 SOFTWARE)

SIGNATURES TAKEN ON : A12

Test Condition: Set A11TP2 to NORMAL position and remove A11JU602

A11S406 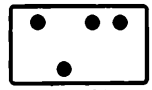 Position 4

OPEN

Signature Analyzer Connections on A11 and A12: Checks:

START/STOP	A11	ST2	TP1-7	Rising/Falling	A12 Main ROM
QUALIFIER	A12	As noted	below	Low Level	
CLOCK	A11	CLK1	TP1-1	Rising	

+5 v reference = 1180

Note: Cycle power when changing qualifier

Qualifier= U100-20		Qualifier= U200-20	
U100 -11 =	P41P	U200 -11 =	4AP9
12 =	0C04	12 =	P89H
13 =	5808	13 =	0110
15 =	H32A	15 =	28U9
16 =	6680	16 =	4F53
17 =	86CH	17 =	1177
18 =	33PU	18 =	8U4C
19 =	HCF8	19 =	6U76

Table 8-13. SA Program Loop 4:15 (2.0 SOFTWARE)

SIGNATURES TAKEN ON : A12

NOTE: Signatures take approximately 30 seconds to stabilize

Test Condition: Same as for loop 4 except:

A11S406 Position 15

OPEN

Signature Analyzer Connections on A11 and A12: same as for loop 4

Qualifiers= Same as for loop 4

Signatures= Same as for loop 4

Table 8-14. SA Program Loop 5 (2.0 SOFTWARE)

SIGNATURES TAKEN ON: A12

Test Condition: Set A11TP2 to NORMAL position and remove A11JU602

A11S406 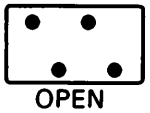 Position 5

OPEN

Signature Analyzer Connections on A11 and A12: Checks:

START/STOP	A11	ST2	TP1-7	Rising/Falling	ROM Banks 1 & 2
QUALIFIER	A12	As noted below		Low Level	
CLOCK	A11	CLK1	TP1-1	Rising	

+5 v reference = 1180

Note: Cycle power when changing qualifier

Qualifier= U300-20		Qualifier= U400-20	
U300 -11 =	A429	U400 -11 =	9C6C
12 =	U944	12 =	1729
13 =	1782	13 =	C9A3
15 =	7517	15 =	H236
16 =	U7P2	16 =	U241
17 =	7144	17 =	P41H
18 =	F241	18 =	4PFC
19 =	7AA6	19 =	P042

Table 8-15. SA Program Loop 5:15 (2.0 SOFTWARE)

SIGNATURES TAKEN ON: A12

NOTE: Signatures take approximately 30 seconds to stabilize

Test Condition: Same as for loop 5 except:

A11S406 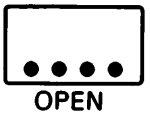 Position 15

OPEN

Signature Analyzer Connections on A11 and A12: Same as for loop 5

Qualifiers= Same as for loop 5

Signatures= Same as for loop 5

Table 8-16. SA Program Loop 6 (2.0 SOFTWARE)

SIGNATURES TAKEN ON: A12

Test Condition: Set A11TP2 to NORMAL position and remove A11JU602

A11S406 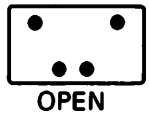 Position 6

OPEN

Signature Analyzer Connections on A11 and A12: Checks:

START/STOP	A11	ST2	TP1-7	Rising/Falling	ROM Banks 3 & 4
QUALIFIER	A12	As noted below		Low Level	
CLOCK	A11	CLK1	TP1-1	Rising	

+5 v reference = 1180

Note: Cycle power when changing qualifier

Qualifier=U102-20 U202 not used at this time.

U102-11 = 1F37
12 = 1C07
13 = H20U
15 = 87C4
16 = 9U9P
17 = CU2U
18 = C1H1
19 = 5852

Table 8-17. SA Program Loop 6:15 (2.0 SOFTWARE)

SIGNATURES TAKEN ON: A12

NOTE: Signatures take approximately 30 seconds to stabilize

Test Condition: Same as for loop 6 except:

A11S406 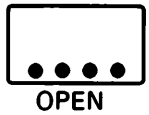 Position 15

OPEN

Signature Analyzer Connections on A11 and A12: same as for loop 6

Qualifiers= Same as for loop 6

Signatures= Same as for loop 6

Table 8-18. SA Program Loop 7 (2.0 SOFTWARE)

SIGNATURES TAKEN ON: A12

Test Condition: Set A11TP2 to NORMAL position and remove A11JU602

A11S406 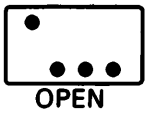 Position 7

Signature Analyzer Connections on A11 and A12: Checks:

START/STOP	A11	ST2	TP1-7	Rising/Falling	ROM Banks 5 & 6
QUALIFIER	A12	As noted below		Low Level	
CLOCK	A11	CLK1	TP1-1	Rising	

+5 v reference = 1180

Note: Cycle power when changing qualifier

Qualifier=U302-20 U104 not used at this time.

U302-11 = 4AH4
12 = 362C
13 = 06F3
15 = 43A2
16 = 5H77
17 = 572P
18 = 8PC7
19 = FHPP

Table 8-19. SA Program Loop 7:15 (2.0 SOFTWARE)

SIGNATURES TAKEN ON: A12

NOTE: Signatures take approximately 30 seconds to stabilize

Test Condition: Same as for loop 7 except:

A11S406 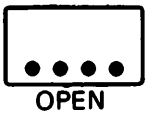 Position 15

Signature Analyzer Connections on A11 & A12: same as for loop 7

Qualifiers= Same as for loop 7

Signatures= Same as for loop 7

Table 8-20. SA Program Loop 8 (2.0 SOFTWARE)

SIGNATURES TAKEN ON: A12

Test Condition: Set A11TP2 to NORMAL position and remove A11JU602

A11S406 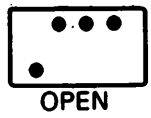 Position 8

OPEN

Signature Analyzer Connections on A11 and A12: Checks:

START/STOP	A11	ST2	TP1-7	Rising/Falling	ROM Bank 7
QUALIFIER	A12	As noted	below	Low Level	
CLOCK	A11	CLK1	TP1-1	Rising	

+5 v reference = 1180

U204 not used at this time.

Table 8-21. SA Program Loop 9 (2.0 SOFTWARE)

SIGNATURES TAKEN ON: A10

Test Condition: A10S100 (C1) to NORM, A10S100 (C2) to NORM
A11TP2 in NORMAL position and A11JU602 removed.

A11S406 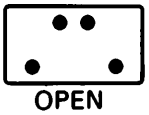 Position 9

OPEN

Signature Analyzer Connections on A10 and A11: Checks:

START/STOP	A11	ST2	TP1-7	Rising/Falling	System access
QUALIFIER	A10	503-18	MCS	Low Level	of Shared RAM
CLOCK	A11	CLK1	TP1-1	Rising	

+5 v reference = C7U8

U503 - 1 = 663P		U503 - 13 = 52P6	
2 = 057F		14 = A3F6	
3 = 1506		15 = 0588	
4 = 9A4U		16 = 8F6U	
5 = 1F37		17 = HF5H	
6 = 2C9F		19 = 0PU0	
7 = 925A		20 = 6H57	
8 = HC32		21 = HAAU	
9 = 1UF5		22 = FC3F	
10 = U39U		23 = 4A0F	
11 = 7060			

Table 8-22. SA Program Loop 9:15 (2.0 SOFTWARE)

SIGNATURES TAKEN ON A10:

NOTE: Signatures take approximately 30 seconds to stabilize

Test Condition: Same as for loop 9 except:

A11S406 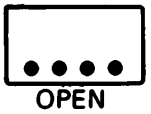 Position 15

OPEN

Signature Analyzer Connections on A10 and A11: same as for loop 9

Qualifier = Same as for loop 9

Signatures= Same as for loop 9

Table 8-34. A10 Free Run Loop A

PCA: A10

Test Conditions: Set A10S100(C1) to FREE RUN, A10S100(C2) to NORM

Signature Analyzer Connections on A10:				Checks:
START	A15	TP5	Rising	Receiver Address Bus
STOP	A15	TP5	Rising	Receiver Data Bus
CLOCK	PH2	TP3	Falling	Chip Select Circuit

+5 v reference = 0003

TP6	RD0 =	U601
TP7	RD1 =	525C
TP8	RD2 =	321H
TP9	RD3 =	8F05
TP10	RD4 =	93H4
TP11	RD5 =	P398
TP12	RD6 =	298F
TP13	RD7 =	H787

U103	- 7 =	2302
	- 9 =	F9CF
	- 10 =	534H
	- 11 =	C9U1
	- 12 =	1183
	- 13 =	64HF
	- 14 =	29A4
	- 15 =	5FUA

U203	- 3 =	6F9A
	- 5 =	U759
	- 7 =	0356
	- 9 =	1U5P
	- 12 =	P763
	- 14 =	8484
	- 16 =	FFFF
	- 18 =	UUUU

U403	- 5 =	9UP1
	- 7 =	4868
	- 9 =	4FCA
	- 12 =	6U28
	- 14 =	37C5
	- 16 =	6321
	- 18 =	7791

Table 8-35.A10 SA Program Loop B

PCA: A10

Test Condition: A10S100 (C1) to NORM, A10S100 (C2) to SA PROGRAM

Signature Analyzer Connections on A10:				Checks:
START	SA1	TP14	Falling	Shared RAM during
STOP	SA2	TP15	Falling	Receiver Access
CLOCK	PH2	TP3	Falling	

+5 v reference = 1CHH

TP6 RD0 = 2HPH	U503 - 1 = 44AA	U503 - 14 = 7058
TP7 RD1 = 5FU2	2 = A3C9	15 = 59C5
TP8 RD2 = HA01	3 = 07P1	16 = 1UCH
TP9 RD3 = 5062	4 = U543	17 = 0418
TP10 RD4 = U554	5 = APA5	18 = CUP5
TP11 RD5 = HF59	6 = 5U5A	19 = U18A
TP12 RD6 = 7A15	7 = P2C5	20 = 5U59
TP13 RD7 = P9AF	8 = 86H6	21 = 4484
	9 = 94C8	22 = F03P
	10 = 8AU9	23 = H690
	11 = PH8H	
	13 = P2CH	

Table 8-36. A10 SA Program Loop C

PCA: A10

Test Condition: A10S100 (C1) to NORM, A10S100 (C2) to SA PROGRAM

Signature Analyzer Connections on A10:				Checks:
START	SA1	TP14	Rising	ROM CD U507
STOP	SA2	TP15	Rising	
CLOCK	PH2	TP3	Falling	

+5 v reference = 07U3

TP6 RD0 = 109H
TP7 RD1 = 7648
TP8 RD2 = 4U84
TP9 RD3 = 73A7
TP10 RD4 = 8A6U
TP11 RD5 = 43C0
TP12 RD6 = 8UAU
TP13 RD7 = FAH6

Table 8-37. A10 SA Program Loop D

PCA: A10

Test Condition: A10S100 (C1) to NORM, A10S100 (C2) to SA PROGRAM

Signature Analyzer Connections on A10:				Checks:
START	SA2	TP15	Rising	ROM AB U407
STOP	SA3	TP16	Rising	
CLOCK	PH2	TP3	Falling	

+5 v reference = P792

TP6	RD0	=	08U3
TP7	RD1	=	CUP2
TP8	RD2	=	166U
TP9	RD3	=	CFC2
TP10	RD4	=	7302
TP11	RD5	=	85U2
TP12	RD6	=	74U9
TP13	RD7	=	8U6A

Table 8-38. A10 SA Program Loop E

PCA: A10

Test Condition: A10S100 (C1) to NORM, A10S100 (C2) to SA PROGRAM

Signature Analyzer Connections on A10:				Checks:
START	SA2	TP15	Falling	Receiver RAM U405
STOP	SA3	TP16	Falling	
CLOCK	PH2	TP3	Falling	

+5 v reference = 2903

TP6	RD0	=	0397
TP7	RD1	=	9U14
TP8	RD2	=	UH8U
TP9	RD3	=	1FH5
TP10	RD4	=	8F11
TP11	RD5	=	0F80
TP12	RD6	=	APH4
TP13	RD7	=	F245

Table 8-39. A10 SA Program Loop F

PCA: A10

Test Condition: A10S100 (C1) to NORM, A10S100 (C2) to SA PROGRAM

Signature Analyzer Connections on A10:				Checks:
START	SA3	TP16	Falling	Stack RAM U505
STOP	SA4	TP17	Falling	
CLOCK	PH2	TP3	Falling	

+5 v reference = 2131

TP6	RD0 = 92P8
TP7	RD1 = A3C4
TP8	RD2 = 8U59
TP9	RD3 = FU72
TP10	RD4 = A8F0
TP11	RD5 = 5C4A
TP12	RD6 = P2P0
TP13	RD7 = C0PU

Table 8-40. A10 SA Program Loop G

PCA: A10

Test Condition: A10S100 (C1) to NORM, A10S100 (C2) to SA PROGRAM

Signature Analyzer Connections on A10:				Checks:
START	SA3	TP16	Rising	ROM 89 U308
STOP	SA4	TP17	Rising	
CLOCK	PH2	TP3	Falling	

+5 v reference = P733

TP6	RD0 = 8P4P
TP7	RD1 = 0U64
TP8	RD2 = H2H8
TP9	RD3 = CP43
TP10	RD4 = 51U0
TP11	RD5 = CF34
TP12	RD6 = CCAA
TP13	RD7 = 3369

Table 8-41. A10 SA Program Loop H

PCA: A10

Test Condition: A10S100 (C1) to NORM, A10S100 (C2) to SA PROGRAM

Signature Analyzer Connections on A10:				Checks:
START	SA4	TP17	Rising	ROM 67 U307
STOP	SA5	TP18	Rising	
CLOCK	PH2	TP3	Falling	

+5 v reference = 251A

TP6	RD0 = 1C55
TP7	RD1 = 6866
TP8	RD2 = CPH9
TP9	RD3 = 66H5
TP10	RD4 = F224
TP11	RD5 = 2PCH
TP12	RD6 = 8593
TP13	RD7 = 1AA3

Table 8-42. A10 SA Program Loop I

PCA: A10

Test Condition: A10S100 (C1) to NORM, A10S100 (C2) to SA PROGRAM

Signature Analyzer Connections on A10:				Checks:
START	SA4	TP17	Falling	Receiver Peirpheral Data Bus
STOP	SA5	TP18	Falling	
CLOCK	PH2	TP3	Falling	Receiver Peripheral Address Bus
				REN, LREN, RR/W

+5 v reference = APU2

U500 - 5	= 1446	U700 - 8	= C544
		U705 -11	= H4AA
U600 - 4	= 1CC6	12	= 2422
		13	= 4300
		14	= PC65
U605 - 7	= 10HU	15	= F5A0
9	= UC20	16	= 49F1
12	= PAH3	17	= 0422
14	= 96H1	18	= 8077
16	= U413		
18	= 1143		

REPLACEMENT PAGE FOR 8-67

Table 8-43. A10 SA Program Loop J

PCA: A10

Test Condition: A10S100 (C1) to NORM, A10S100 (C2) to SA PROGRAM

Signature Analyzer Connections on A10:				Checks:
START	SA5	TP18	Rising	ROM 45 U306
STOP	SA6	TP19	Rising	
CLOCK	PH2	TP3	Falling	

+5 v reference = 672A

TP6	RD0	=	645C
TP7	RD1	=	21UC
TP8	RD2	=	UA07
TP9	RD3	=	3465
TP10	RD4	=	0P50
TP11	RD5	=	FA0P
TP12	RD6	=	6U42
TP13	RD7	=	3424

Table 8-23. SA Program Loop 10 (2.0 SOFTWARE)

SIGNATURES TAKEN ON: A12

Test Condition: Set A11TP2 to NORMAL position and remove A11JU602

A11S406 Position 10
OPEN

Signature Analyzer Connections on A11:

				Checks:
START/STOP	ST2	TP1-7	Rising/Falling	RAM,
QUALIFIER	As noted below		Low Level	Non-Volative RAM
CLOCK	CLK1	TP1-1	Rising	

Note: Sigs. stabilize slowly; Cycle power when changing qualifier

Qualifier= U106-8
+5 v ref.= CCPC
U106- 11 = 0455
12 = H418
13 = AF03
14 = 538C

Qualifier= U107-8
+5 v ref.= CCPC
U107- 11 = P081
12 = 1HC8
13 = 4CFA
14 = A986

Qualifier= U402-18
+5 v ref.= C7U8
U402- 9 = 1UF5
10 = U39U
11 = 7060
13 = 52P6
14 = A3F6
15 = 0588
16 = 8F6U
17 = HF5H

Qualifier=U404-18
+5 v ref.= C7U8
U404 - 9 = H8U0
10 = PF3H
11 = CA8A
13 = U223
14 = FCP6
15 = 5U9P
16 = 47H0
17 = 3F7C

Qualifier= U500-18
+5 v ref.= C7U8
U500-9 = 1UF5
10 = U39U
11 = 7060
13 = 52P6
14 = A3F6
15 = 0588
16 = 8F6U
17 = HF5H

Table 8-24. SA Program Loop 10:15 (2.0 SOFTWARE)

SIGNATURES TAKEN ON: A12

NOTE: Signatures take approximately 30 seconds to stabilize

Test Condition: Same as for loop 10 except:

A11S406 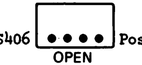 Position 15
OPEN

Signature Analyzer Connections on A11: Same as for loop 10

Qualifiers= Same as for loop 10

Signatures= Same as for loop 10

Table 8-25. SA Program Loop 12a (2.0 SOFTWARE)

SIGNATURES TAKEN ON: A11

Test Conditions: Set A11TP2 to NORMAL position and remove A11JU602

A11S406 Position 12

OPEN

Signature Analyzer Connections on A11:

START	ST2	TP1-7	Rising	Checks:
STOP	SP2	TP1-8	Falling	Decoder Circuitry
CLOCK	CLK1	TP1-1	Rising	for A13 RAM

+5 v reference= 0411

Note: Signatures take approximately 30 seconds to stabilize.

U401 -12 = 4041

U601 - 4 = 2UUU
5 = U953
6 = 85U7
7 = 3FP5
9 = C6C7
10 = 9H59

Table 8-26. SA Program Loop 12a:15 (2.0 SOFTWARE)

SIGNATURES TAKEN ON: A11

NOTE: Signatures take approximately 30 seconds to stabilize

Test Conditions: Same as for loop 12a except:

A11S406 Position 15

OPEN

Signature Analyzer Connections on A11: Same as for loop 12a

+5 v reference= CU26

U401 -12 = 7308

U601 - 4 = UU67
5 = 1FCH
6 = 59FC
7 = 367P
9 = P6U5
10 = 10PC

Table 8-27. SA Program Loop 12b (2.0 SOFTWARE)

SIGNATURES TAKEN ON: A13

Test Condition: Set A11TP2 to NORMAL position and remove A11JU602

A11S406 Position 12

OPEN

Signature Analyzer Connections on A11 and A13:

					Checks:
START/STOP	A11	ST2	TP1-7	Rising/Falling	System Access of
QUALIFIER	A13	As noted below		Low Level	Display RAM, Att.
CLOCK	A11	C1K1	TP1-1	Rising	RAM, Char. RAM

Note: Sigs. stabilize slowly. Cycle power when changing qualifier.

Qualifier = U405-19	Qualifier = 605-19	Qualifier = 705-19
+5 v ref. = P7F7	+5 v ref. = CCPC	+5 v ref. = CCPC
U405-11 = 6U54	U605- 2 = 0455	U705- 2 = 0455
12 = 7HCP	3 = H418	3 = H418
13 = A6H4	4 = AF03	4 = AF03
14 = 9559	5 = 538C	5 = 538C
15 = C41P	6 = P081	6 = P081
16 = FAH4	7 = 1HC8	7 = 1HC8
17 = A67U	8 = 4CFA	8 = 4CFA
18 = 6C54	9 = A986	9 = A986

Qualifier = U102-18
+5 v ref. = C7U8
U102- 9 = 1UF5
10 = U39U
11 = 7060
13 = 52P6
14 = A3F6
15 = 0588
16 = 8F6U
17 = HF5H

For Qualifiers : U203-18
U205-18
U206-18
U305-18
U306-18

+5 v refs. and sigs. are the same as for U102

Table 8-28. SA Program Loop 12b:15 (2.0 SOFTWARE)

SIGNATURES TAKEN ON: A13

NOTE: Signatures take approximately 30 seconds to stabilize

Test Condition: Same as for loop 12b except:

A11S406 Position 15

OPEN

Signature Analyzer Connections on A11 and A13: same as for loop 12b

Qualifiers= same as for loop 12b
Signatures= same as for loop 12b

Table 8-29. SA Program Loop 13a (2.0 SOFTWARE)

SIGNATURES TAKEN ON: A13

Test Condition: Set A11TP2 to NORMAL position and remove A11JU602

A11S406 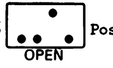 Position 13

OPEN

Signature Analyzer Connections on A13:

				Checks:
START	VSYNC	TP1	Rising	CRTC access of Character
STOP	VSYNC	TP1	Rising	RAM, Attribute RAM
CLOCK	L/S	TP1	Rising	

+5 v reference= C3A5

* = Not blinking

U200-5 = 0000
10 = F97P
11 = 86AF
12 = U2FU
13 = A3HC
14 = 6697
15 = FCU4

U302-4 = AU1C
7 = A572
9 = 34HH
12 = 929H

U400-6 = 5114
7 = 5114
9 = 4UH2
10 = 4UH2
12 = PP83
13 = PP83

U402-4 = 0255
7 = 3972
9 = A992
12 = 9794

U501-9 = 3972
10 = 0255
11 = 9794
13 = A992
14 = 929H
15 = 34HH
16 = A572
17 = AU1C

U503-9 = 0000
10 = 0000
11 = 0000
13 = 0000
14 = 0000
15 = C3A5
16 = C3A5*
17 = C3A5

U702-4 = HH39
5 = 8CA8
6 = 13AA
7 = 74U6
8 = CF6H
9 = 50C4
10 = 89UA
11 = C25P
12 = 7F8U
13 = FUUA
18 = U499
19 = 0000*
21 = 0000
23 = 0000
25 = C3A5
26 = C3A5
27 = C3A5
28 = C3A5
29 = C3A5
30 = C3A5
31 = C3A5
32 = C3A5
33 = C3A5
35 = 4UH2
36 = 5114
37 = PP83
38 = CP9A

U801-6 = CP9A
7 = CP9A
9 = 7F8U
10 = 7F8U
12 = FUUA
13 = FUUA

U802-3 = 50C4
4 = 50C4
6 = CF6H
7 = CF6H
9 = C25P
10 = C25P
12 = 89UA
13 = 89UA

U803-3 = 74U6
4 = 74U6
6 = 8CA8
7 = 8CA8
9 = HH39
10 = HH39
12 = 13AA
13 = 13AA

8-17. RECEIVER PROCESSOR

Table 8-30. A10 Free Run Loop A (2.0 SOFTWARE)

SIGNATURES TAKEN ON: A10

Test Conditions: Set A10S100(C1) to FREE RUN, A10S100(C2) to NORM

Signature Analyzer Connections on A10:				Checks:
START	A15	TP5	Rising	Receiver Address Bus,
STOP	A15	TP5	Rising	Receiver Data Bus,
CLOCK	PH2	TP3	Falling	Chip Select Circuit

+5 v reference = 0003

TP6 RD0 = 6782
TP7 RD1 = C005
TP8 RD2 = 22PF
TP9 RD3 = 74H2
TP10 RD4 = 36CP
TP11 RD5 = F6U5
TP12 RD6 = 7C98
TP13 RD7 = 4H57

U103 - 7 = 2302
- 9 = F9CF
- 10 = 534H
- 11 = C9U1
- 12 = 1183
- 13 = 64HF
- 14 = 29A4
- 15 = 5FUA

U203 - 3 = 6F9A
- 5 = U759
- 7 = 0356
- 9 = 1U5P
- 12 = P763
- 14 = 8484
- 16 = FFFF
- 18 = UUUU

U403 - 5 = 9UP1
- 7 = 4868
- 9 = 4FCA
- 12 = 6U28
- 14 = 37C5
- 16 = 6321
- 18 = 7791

Table 8-31. A10 SA Program Loop B (2.0 SOFTWARE)

SIGNATURES TAKEN ON: A10

Test Condition: A10S100 (C1) to NORM, A10S100 (C2) to SA PROGRAM

Signature Analyzer Connections on A10:

				Checks:
START	SA1	TP14	Falling	Shared RAM during
STOP	SA2	TP15	Falling	Receiver Access
CLOCK	PH2	TP3	Falling	

+5 v reference = 1CHH

TP6 RD0 = 0H09	U503 - 1 = 0C2F	U503 - 14 = 7058
TP7 RD1 = 4903	2 = 857C	15 = 59C5
TP8 RD2 = 40A7	3 = 8CF0	16 = 1UCH
TP9 RD3 = 7C30	4 = CP97	17 = 0418
TP10 RD4 = 5652	5 = 531U	18 = CUP5
TP11 RD5 = P45C	6 = 2001	19 = U18A
TP12 RD6 = 6H1C	7 = 712U	20 = 5U59
TP13 RD7 = 4AU2	8 = C6P4	21 = 4484
	9 = 94C8	22 = F03P
	10 = 8AU9	23 = HP73
	11 = PH8H	
	13 = P2CH	

Table 8-32. A10 SA Program Loop C (2.0 SOFTWARE)

SIGNATURES TAKEN ON: A10

Test Condition: A10S100 (C1) to NORM, A10S100 (C2) to SA PROGRAM

Signature Analyzer Connections on A10:

				Checks:
START	SA1	TP14	Rising	ROM CD U507
STOP	SA2	TP15	Rising	
CLOCK	PH2	TP3	Falling	

+5 v reference = 07U3

TP6 RD0 = HHH4
TP7 RD1 = 73C7
TP8 RD2 = F820
TP9 RD3 = 499U
TP10 RD4 = H191
TP11 RD5 = 4298
TP12 RD6 = PU38
TP13 RD7 = 4633

Table 8-33. A10 SA Program Loop D (2.0 SOFTWARE)

SIGNATURES TAKEN ON: A10

Test Condition: A10S100 (C1) to NORM, A10S100 (C2) to SA PROGRAM

Signature Analyzer Connections on A10:

				Checks:
START	SA2	TP15	Rising	ROM AB U407
STOP	SA3	TP16	Rising	
CLOCK	PH2	TP3	Falling	

+5 v reference = P792

TP6	RD0	= U156
TP7	RD1	= 5F73
TP8	RD2	= A54U
TP9	RD3	= 52A6
TP10	RD4	= 0652
TP11	RD5	= 9F4F
TP12	RD6	= 8460
TP13	RD7	= P486

Table 8-34. A10 SA Program Loop E (2.0 SOFTWARE)

SIGNATURES TAKEN ON: A10

Test Condition: A10S100 (C1) to NORM, A10S100 (C2) to SA PROGRAM

Signature Analyzer Connections on A10:

				Checks:
START	SA2	TP15	Falling	Receiver RAM U405
STOP	SA3	TP16	Falling	
CLOCK	PH2	TP3	Falling	

+5 v reference = 2903

TP6	RD0	= A7CU
TP7	RD1	= 7U77
TP8	RD2	= 7CU9
TP9	RD3	= 2110
TP10	RD4	= 8H59
TP11	RD5	= 0PU0
TP12	RD6	= A304
TP13	RD7	= 506P

Table 8-35. A10 SA Program Loop F (2.0 SOFTWARE)

SIGNATURES TAKEN ON: A10

Test Condition: A10S100 (C1) to NORM, A10S100 (C2) to SA PROGRAM

Signature Analyzer Connections on A10:

				Checks:
START	SA3	TP16	Falling	Stack RAM U505
STOP	SA4	TP17	Falling	
CLOCK	PH2	TP3	Falling	

+5 v reference = 2131

TP6 RD0 = HC4H
TP7 RD1 = 2611
TP8 RD2 = FAC0
TP9 RD3 = 0F84
TP10 RD4 = U466
TP11 RD5 = 5247
TP12 RD6 = 6U46
TP13 RD7 = 9693

Table 8-36. A10 SA Program Loop G (2.0 SOFTWARE)

SIGNATURES TAKEN ON: A10

Test Condition: A10S100 (C1) to NORM, A10S100 (C2) to SA PROGRAM

Signature Analyzer Connections on A10:

				Checks:
START	SA3	TP16	Rising	ROM 89 U308
STOP	SA4	TP17	Rising	
CLOCK	PH2	TP3	Falling	

+5 v reference = P733

TP6 RD0 = 3608
TP7 RD1 = 4270
TP8 RD2 = 721A
TP9 RD3 = H22A
TP10 RD4 = 9541
TP11 RD5 = 3FAH
TP12 RD6 = FPA3
TP13 RD7 = 89CP

Table 8-37. A10 SA Program Loop H (2.0 SOFTWARE)

SIGNATURES TAKEN ON: A10

Test Condition: A10S100 (C1) to NORM, A10S100 (C2) to SA PROGRAM

Signature Analyzer Connections on A10:

				Checks:
START	SA4	TP17	Rising	ROM 67 U307
STOP	SA5	TP18	Rising	
CLOCK	PH2	TP3	Falling	

+5 v reference = 251A

TP6 RD0 = 3H3H
TP7 RD1 = 06H4
TP8 RD2 = 32AF
TP9 RD3 = P978
TP10 RD4 = 10C9
TP11 RD5 = 99AA
TP12 RD6 = 59A1
TP13 RD7 = P748

Table 8-38. A10 SA Program Loop I (2.0 SOFTWARE)

SIGNATURES TAKEN ON: A10

Test Condition: A10S100 (C1) to NORM, A10S100 (C2) to SA PROGRAM

Signature Analyzer Connections on A10:

				Checks:
START	SA4	TP17	Falling	Receiver Peirpheral Data Bus, Receiver Peripheral Address Bus, REN, LREN, RR/W
STOP	SA5	TP18	Falling	
CLOCK	PH2	TP3	Falling	

+5 v reference = APU2

U500 - 5 = 1446

U600 - 4 = 1CC6

U605 - 7 = 10HU
9 = UC20
12 = PAH3
14 = 96H1
16 = U413
18 = 1143

U700 - 8 = C544

U705 -11 = H4AA
12 = 2422
13 = 4300
14 = PC65
15 = F5A0
16 = 49F1
17 = 0422
18 = 8077

Table 8-39. A10 SA Program Loop J (2.0 SOFTWARE)

SIGNATURES TAKEN ON: A10

Test Condition: A10S100 (C1) to NORM, A10S100 (C2) to SA PROGRAM

Signature Analyzer Connections on A10:				Checks:
START	SA5	TP18	Rising	ROM 45 U306
STOP	SA6	TP19	Rising	
CLOCK	PH2	TP3	Falling	

+5 v reference = 672A

TP6 RD0 = 5392
TP7 RD1 = 46FC
TP8 RD2 = 5306
TP9 RD3 = 5H18
TP10 RD4 = 82CA
TP11 RD5 = 519A
TP12 RD6 = AHF8
TP13 RD7 = 177P

Table 8-40. A10 SA Program Loop K (2.0 SOFTWARE)

SIGNATURES TAKEN ON: A10

Test Condition: A10S100 (C1) to NORM, A10S100 (C2) to SA PROGRAM

Signature Analyzer Connections on A10:				Checks:
START	SA6	TP19	Falling	ROM EF U607
STOP	SA1	TP14	Rising	
CLOCK	PH2	TP3	Falling	

+5 v reference = 55UF

TP6	RD0 = 9UHA
TP7	RD1 = 91U2
TP8	RD2 = 6A96
TP9	RD3 = F333
TP10	RD4 = 81F3
TP11	RD5 = 7PA9
TP12	RD6 = UC50
TP13	RD7 = 5263

Table 8-41. A10 SA Program Loop L (2.0 SOFTWARE)

SIGNATURES TAKEN ON: A10

Test Condition: A10S100 (C1) to NORM, A10S100 (C2) to SA PROGRAM

Signature Analyzer Connections on A10:				Checks:
START	SA6	TP19	Rising	ROM 23 U305
STOP	SA1	TP14	Falling	
CLOCK	PH2	TP3	Falling	

+5 v reference = 55UF

TP6	RD0 = 1829
TP7	RD1 = 5645
TP8	RD2 = 7290
TP9	RD3 = 0U0C
TP10	RD4 = 48CA
TP11	RD5 = 547H
TP12	RD6 = A77P
TP13	RD7 = CP66

Table 8-42. A9 Free Run Loop A (2.0 SOFTWARE)

SIGNATURES TAKEN ON: A9

Test Conditions for Rev A bds: Insert TST (above JU2) and JU2. JU4 in left position. JU1 and JU3 removed.

Test Conditions for Rev B bds: JU1 in NOP position (down). JU2 in normal position (up). JU3 in NMI DIS position (right). JU4 in normal position (left). JU300 removed.

Signature Analyzer Connections on A9:

				Checks:
START	A15	TP7	Rising	Transients Address Bus,
STOP	A15	TP7	Rising	Decoder Output,
CLOCK	Q	TP5	Falling	Start/Stop Bit for SA Program Loops

+5 v reference = 0003

U102 -		U800 -		U900 -	
8	UUUU	1	CH3H	7	572A
9	FFFF	2	9682	9	5FA4
10	8484	3	4F0H	10	729H
11	P763	4	41U7	11	FA7C
12	1U5P	5	78P0	12	29P1
13	0356	6	F53A	13	A789
14	U759	7	908P	14	9P2C
15	6F9A	8	5PCP	15	78A3
16	7791	9	U789		
17	6321	10	7F82		
18	37C5	11	8CH2		
19	6U28	13	0AC8		
20	4FCA	14	U898		
21	4868	15	9U0A		
22	9UP1	16	02P2		
23	0002	17	P136		

U702 -9 = A6C8

Table 8-43. A9 Free Run Loop B (2.0 SOFTWARE)

SIGNATURES TAKEN ON: A9

Test Conditions for Rev A bds: Insert TST (above JU2) and JU2. JU1, JU3, and JU4 removed. Be sure the SA probe is grounded.

Test Conditions for Rev B bds: JU1 in NOP position (down). JU2 in normal position (up). JU3 in NMI DIS position (right). JU4 in ROM CON position (right). JU300 removed. Be sure the SA probe is grounded.

Signature Analyzer Connections on A9:

				Checks:
START	A15	TP7	Rising	ROM Data Bus
STOP	A15	TP7	Rising	
CLOCK	Q	TP5	Falling	

+5 v reference = 0003

U400 -	
9	560U
10	1022
11	1023
13	9U54
14	CP8A
15	F435
16	FFH4
17	628F

Table 8-44. A9 SA Program Loop A (2.0 SOFTWARE)

SIGNATURES TAKEN ON: A9

Test Conditions for Rev A and Rev B bds: A10S100 (C1) to NORM, A10S100 (C2) to SA PROGRAM

Signature Analyzer Connections on A10:

				Checks:
START	SA4	TP17	Falling	Address Comparator,
STOP	SA5	TP18	Falling	Address Decoder
CLOCK	PH2	TP3	Falling	

+5 v reference = APU2 * = Not blinking

U502 -		U802 -		U902 -	
3	H4AA	1	1446	6	0U07
4	2422	2	UC20	10	10HU
7	4300	3	PAH3	12	96H1
8	PC65	4	C544	13	U413
13	F5A0	10	APU2*	15	1143
14	49F1	11	2U96		
17	0422	12	APU2*		
18	8077	13	591C		
		14	APU2*		
		15	H778		

Table 8-45. A9 SA Program Loop B (2.0 SOFTWARE)

SIGNATURES TAKEN ON: A9

Test Conditions for Rev A bds: Insert JU1. JU4 in left position. TST (above JU2), JU2, and JU3 removed.

Test Conditions for Rev B bds: JU1 in normal position (up). JU2 in SA position (down). JU3 in normal position (left). JU4 in normal position (left). JU300 installed .

Signature Analyzer Connections on A9:

				Checks:
START	START	TP3	Falling	RAM Data U600
STOP	STOP	TP4	Rising	
CLOCK	Q	TP5	Falling	

+5 v reference = 5F32 P2 R/W = H0H0

U303 -		U304 -		U600 -	
2	P828	2	27U2	2	7185
5	4U74	5	0C45	3	U73U
6	FC29	6	1AC8	4	5H48
9	79P9	9	H328	5	278F
12	A21C	12	FU9F	6	H2P5
15	CP9A	15	7AU2	7	3FCA
16	HUFU	16	6987	8	4P4A
19	34H3	19	5169	9	CUF4

Table 8-46. A9 SA Program Loop C (2.0 SOFTWARE)

SIGNATURES TAKEN ON: A9

Test Conditions for Rev A bds: Insert JU1. JU4 in left position. TST (above JU2), JU2, and JU3 removed.

Test Conditions for Rev B bds: JU1 in normal position (up). JU2 in SA position (down). JU3 in NMI DIS position (right). JU4 in normal position (left). JU300 installed.

Signature Analyzer Connections on A9:				Checks:
START/STOP	START	TP3	Falling /Rising	RAM Data
QUALIFIER	U600-13		High Level	
CLOCK	Q	TP5	Falling	

+5 v reference = 0046 P2 R/W = 4174

U600 - 2 = A7FF
3 = PH42
4 = HU80
5 = 08F1
6 = 524H
7 = H4P8
8 = H7C0
9 = H63A

Table 8-47. A9 SA Program Loop D (2.0 SOFTWARE)

SIGNATURES TAKEN ON: A9

Test Conditions on Rev A bds: Insert JU1. JU4 in left position. TST (above JU2), JU2, and JU3 removed.

Test Conditions on Rev B bds: JU1 in normal position (up). JU2 in SA position (down). JU3 in NMI DIS position (right). JU4 in normal position (left). JU300 installed.

Signature Analyzer Connections on A9:				Checks:
START/STOP	START	TP3	Falling /Rising	Latch Data
QUALIFIER	As noted below		Low Level	
CLOCK	Q	TP5	Falling	

+5 v reference = CC34 Note: Cycle power when changing qualifier

Qualifier= U303-1	Qualifier= U304-1
U303 - 3 = 2HH8	U304 - 3 = 2HH8
4 = P4C7	4 = P4C7
7 = FCHC	7 = FCHC
8 = C7F1	8 = C7F1
13 = UF4C	13 = UF4C
14 = 0CH5	14 = 0CH5
17 = PU8P	17 = PU8P
18 = HH7H	18 = HH7H

Table 8-48. A8 SA Program Loop A (2.0 SOFTWARE)

SIGNATURES TAKEN ON: A8

Test Conditions: A10S100 (C1) to NORM, A10S100 (C2) to SA PROGRAM

Signature Analyzer Connections on A10:

				Checks:
START	SA4	TP17	Falling	Address Comparator,
STOP	SA5	TP18	Falling	Address Decoder,
CLOCK	PH2	TP3	Falling	Input Control Latch

+5 v reference = APU2 * = Not blinking

U204 - 3 = APU2*		U403 - 2 = 1446	
		3 = PAH3	
U303 - 2 = 0H8A		4 = C544	
3 = H4AA		7 = APU2*	
4 = 2422		12 = APU2*	
5 = 9499		14 = 4C7C	
6 = 8C79			
7 = 4300		U503 - 6 = P589	
8 = PC65		10 = 10HU	
9 = 0724		12 = 96H1	
12 = 8C1U		13 = U413	
13 = F5A0		15 = 1143	
14 = 49F1			
15 = CU2U			
16 = 4C8F			
17 = 0422			
18 = 8077			
19 = 09H6			

Table 8-49. A8 SA Program Loop B (2.0 SOFTWARE)

SIGNATURES TAKEN ON: A8

Test Conditions on Rev A bds: Remove A9 jumpers TST, JU2, and JU3

Test Conditions on Rev B bds: Remove A9 jumpers JU1, JU2, and JU3

Signature Analyzer Connections on A9:

				Checks:
START	START	TP3	Falling	Input Latch for Data
STOP	STOP	TP4	Rising	Transients
CLOCK	Q	TP5	Falling	

+5 v reference = 5F32

U501 - 2 = 7634
5 = FPC7
6 = 47CP
9 = 66C8
12 = U732
15 = 898F
16 = H454
19 = CC0U

Table 8-50. A8 SA Program Loop C (2.0 SOFTWARE)

SIGNATURES TAKEN ON: A8

Test Conditions on Rev A bds: Remove A9 jumpers TST, JU2, and JU3

Test Conditions on Rev B bds: Remove A9 jumpers JU1, JU2, and JU3

Signature Analyzer Connections on A8 and A9:

					Checks:
START/STOP	A9	START	TP3	Falling/Rising	Input Latch for Data
QUALIFIER	A8	U501-1		Low Level	Transients
CLOCK	A9	Q	TP5	Falling	

+5 v reference = CC34

U501 - 2 = 96PF
5 = 725C
6 = P5PH
9 = 5CP0
12 = 7P25
15 = 85PA
16 = 77F7
19 = 6PCP

Table 8-51. A1 SA Program Loop A (2.0 SOFTWARE)

SIGNATURES TAKEN ON: A1

Test Conditions: A10S100 (C1) to NORM, A10S100 (C2) to SA PROGRAM

Signature Analyzer Connections on A10:

				Checks:
START	SA4	TP17	Falling	Address Comparator,
STOP	SA5	TP18	Falling	Address Decoder,
CLOCK	PH2	TP3	Falling	Data Bus Decoder

+5 v reference = APU2

U500 - 7 = HC59	U600 -11 = C544	U800 - 1 = 1446
9 = HCHF	12 = 3FAF	2 = UC20
10 = 6P26	13 = 0422	3 = PAH3
11 = 8335	14 = 8077	4 = C544
12 = 074P	15 = A040	13 = 24PA
13 = P768	16 = 379F	15 = UH19
14 = C629	17 = 2422	
15 = 1C99	18 = H4AA	U900 - 6 = H9U3
	19 = H705	10 = 10HU
U600 - 2 = H40H		12 = 96H1
3 = 4300	U700 - 2 = 6259	13 = U413
4 = PC65	5 = PP58	15 = 1143
5 = 72CA	6 = 260A	
6 = 1F89	9 = 2786	
7 = F5A0	12 = 7CC8	
8 = 49F1	15 = IF79	
9 = A000		

Table 8-52. A2 SA Program Loop A (2.0 SOFTWARE)

SIGNATURES TAKEN ON: A2

Test Conditions: A10S100 (C1) to NORM, A10S100 (C2) to SA PROGRAM

Signature Analyzer Connections on A10:

				Checks:
START	SA4	TP17	Falling	Address Comparator,
STOP	SA5	TP18	Falling	Input Control Latch
CLOCK	PH2	TP3	Falling	

+5 v reference = APU2

U604 - 6 = 6072	U705 - 2 = 760U	U705 -12 = 148H
	3 = 8077	13 = H4AA
U704 - 6 = FP80	4 = 0422	14 = 2422
10 = 10HU	5 = U0H7	15 = 95FP
12 = 96H1	6 = HICP	16 = HAPH
13 = U413	7 = 49F1	17 = 4300
15 = 1143	8 = F5A0	18 = PC65
	9 = 2F39	19 = F7H2
	11 = C544	

Table 8-53. A3 SA Program Loop A (2.0 SOFTWARE)

SIGNATURES TAKEN ON: A3

Test Conditions: A10S100 (C1) to NORM, A10S100 (C2) to SA PROGRAM

Signature Analyzer Connections on A10:

				Checks:
START	SA4	TP17	Falling	Address Comparator,
STOP	SA5	TP18	Falling	Address Decoder,
CLOCK	PH2	TP3	Falling	Input Control Latch

+5 v reference = APU2

U702 - 3 = 5U82		U803 - 2 = 33U9	
6 = 09PP		3 = H4AA	
8 = APU2		4 = 2422	
10 = 1446		5 = UC5F	
11 = CAC4		6 = 47IH	
		7 = PC65	
U800 - 6 = A71F		8 = 4300	
10 = 10HU		9 = U170	
12 = 96H1		11 = C544	
13 = U413			
15 = 1143			

Table 8-54. A4 SA Program Loop A (2.0 SOFTWARE)

SIGNATURES TAKEN ON: A4

Test Conditions: A10S100 (C1) to NORM, A10S100 (C2) to SA PROGRAM

Signature Analyzer Connections on A10:

				Checks:
START	SA4	TP17	Falling	Address Comparator,
STOP	SA5	TP18	Falling	Address Decoder,
CLOCK	PH2	TP3	Falling	Input Control Latch, Input Data Latches

+5 v reference = APU2 * = Not blinking

Note: Signatures take approximately 10 seconds to stabilize

U302 - 2 = 817F	U602 - 2 = U79U	U702 - 1 = 1446
5 = H53C	3 = H4AA	2 = UC20
6 = F0P8	4 - 2422	3 = PAH3
9 = UFH1	5 = 8F0H	4 = C544
12 = HPC2	6 = AH8H	9 = 0242
15 = HP86	7 = 4300	11 = FP6A
16 = UP1C	8 = PC65	13 = 4544
19 = FF02	9 = 3331	14 = APU2*
	12 = A30F	15 = HP60
U402 -16 = A341	13 = F5A0	
19 = 4791	14 = 49F1	U802 - 6 = 570F
	15 = 4P33	10 = 10HU
U502 - 2 = 8P85	16 = 9292	12 = 96H1
5 = 7H18	17 = 0422	13 = U413
6 = 64FU	18 = 8077	15 = 1143
9 = C524	19 = 01F0	
12 = 65A5		
15 = 951A		
16 = 33F7		
19 = F097		

Table 8-55. A5 SA Program Loop A (2.0 SOFTWARE)

SIGNATURES TAKEN ON: A5

Test Conditions: A10S100 (C1) to NORM, A10S100 (C2) to SA PROGRAM

Signature Analyzer Connections on A10:

				Checks:
START	SA5	TP18	Falling	Programmable Counters,
STOP	SA6	TP19	Falling	Data Latches,
CLOCK	PH2	TP3	Falling	Comparator Circuit,
				Control Status Latch,
+5 v reference = 65H8				Counter Mode Counter

* = Not blinking

U104 - 3 = P5P0	U405 - 2 = 2418	U505 - 2 = 2418
6 = 65H8	3 = 6189	3 = 6FAH
8 = 0000*	4 = 9P45	4 = 9926
11 = 0000	5 = PHPF	5 = PHPF
	6 = 98PC	6 = 98PC
U105 - 2 = 0000*	7 = A10H	7 = 7UFP
3 = 65H8*	8 = 6037	8 = F74P
6 = 0000	9 = 9P56	9 = 9P56
10 = P5P0	12 = 124H	12 = 124H
11 = 8038	13 = 0000*	13 = U3AC
	14 = 65H8	14 = 5F38
U204 - 7 = 65H8	15 = 7HP3	15 = 7HP3
	16 = C9PH	16 = C9PH
U205 - 3 = 0000*	17 = 65H8	17 = 517P
6 = 65H8*	18 = 0000*	18 = 07UH
8 = P867	19 = CCFH	19 = CCFH
11 = 65H8		
	U406 - 3 = 124H	
U306 -11 = 6037	4 = 7HP3	U506 - 1 = 65H8
12 = A10H	5 = C9PH	3 = 2418
13 = 9P45	6 = CCFH	4 = PHPF
14 = 6189	11 = 07UH	5 = 98PC
15 = P5P0	12 = 517P	6 = 9P56
	13 = 5F38	11 = F74P
	14 = U3AC	12 = 7UF9
	15 = AA68	13 = 9926
		14 = 6FAH
		15 = 3178

Table 8-56. A5 SA Program Loop B (2.0 SOFTWARE)

SIGNATURES TAKEN ON: A5

Test Conditions: A10S100 (C1) to NORM, A10S100 (C2) to SA PROGRAM

Signature Analyzer Connections on A10:

				Checks:
START	SA4	TP17	Falling	Address Comparator,
STOP	SA5	TP18	Falling	Address Decoder,
CLOCK	PH2	TP3	Falling	Control Lathes

+5 v reference = APU2

U605 - 2 = 32H2	U705 - 2 = U91F	U706 - 6 = 5F52
5 = 12C9	3 = H4AA	10 = 10HU
6 = 8HU7	4 = 2422	12 = 96H1
9 = 801P	5 = 8A4P	13 = U413
12 = 0P3A	6 = 9013	15 = 1143
15 = 8PF0	7 = 4300	
16 = 407H	8 = PC65	
19 = A9UH	9 = 7CPF	
	11 = C544	
U606 - 1 = 1446	13 = F5A0	
2 = UC20	14 = 49F1	
3 = PAH3	15 = 7730	
9 = 56F0	16 = 1207	
11 = 0A92	17 = 0422	
12 = APU2	18 = 8077	
13 = APU2	19 = AF40	
14 = APU2		
15 = APU2		

Table 8-57. A6 SA Program Loop A (2.0 SOFTWARE)

SIGNATURES TAKEN ON: A6

Test Conditions: A10S100 (C1) to NORM, A10S100 (C2) to SA PROGRAM

Signature Analyzer Connections on A10:

				Checks:
START	SA4	TP17	Falling	Address Comparator,
STOP	SA5	TP18	Falling	Address Decoder,
CLOCK	PH2	TP3	Falling	Input Control Latch

+5 v reference = APU2

* = Not blinking

U400 - 6 = F228
10 = 10HU
12 = 96H1
13 = U413
15 = 1143

U500 - 1 = UC20
2 = PAH3
3 = 1446
4 = C544
9 = APU2*
11 = APU2*
14 = 6FHA

U600 -11 = 1CC6

U700 - 2 = 10PA
3 = H4AA
4 = 2422
5 = 5805
6 = 9C52
7 = 4300
8 = PC65
9 = 68AP
12 = 68H5
13 = F5A0
14 = 49F1
15 = 0228
16 = 4U13
17 = 0422
18 = 8077
19 = 8308

Table 8-58. A7 SA Program Loop A (2.0 SOFTWARE)

SIGNATURES TAKEN ON: A7

Test Conditions: A10S100 (C1) to NORM, A10S100 (C2) to SA PROGRAM

Signature Analyzer Connections on A10:

				Checks:
START	SA4	TP17	Falling	Address Comparator,
STOP	SA5	TP18	Falling	Address Decoder,
CLOCK	PH2	TP3	Falling	Input Control Latch

+5 v reference = APU2

* = Not blinking

U603 - 1 = 1446		U802 - 3 = 8077	
2 = UC20		4 = 0422	
3 = PAH3		7 = 49F1	
10 = APU2*		8 = F5A0	
12 = APU2*		9 = 37A9	
14 = APU2*		11 - C544	
15 = 685A		12 = CH79	
		13 = PC65	
U703 - 6 = F6A8		14 = 4300	
10 = 10HU		15 = F3F9	
12 = 96H1		16 = H632	
13 = U413		17 = 2422	
15 = 1143		18 = H4AA	
		19 = PF95	

8-18. INTERFACE TROUBLESHOOTING

Free Run I/O Troubleshooting

1. Plug the I/O into Port 1 or Port 2 of the HP 4945A (located on rear of the instrument). Set A11 S406 to an SA program Loop position (any position from 1-15).

2. Connect the signature analyzer as specified in the appropriate I/O module's Free Run SA table.

3. Switch the HP 4945A ON.

4. Remove the data bus jumper on the I/O module AFTER power is on.

   JU501 on the 18162A
   JU201 on the 18163A
   JU403 on the 18165A

   NOTE: The data bus jumper must be removed AFTER power on because the A11 System Processor initiates the Free Run SA on the I/O's when A11S406 is in an SA Program Loop position. Once the I/O's data bus jumper is removed, the I/O should free-run through its address range. If the I/O's Free Run SA Loop does not seem to be stable, it is possible that the I/O processor hung up when the data bus jumper was removed. If this happens, turn the HP 4945A OFF, re-install the data bus jumper and then repeat steps 3 and 4.

5. The following signals must be correct in order to perform SA on any of the I/O modules. Check for the signals listed below on the appropriate I/O module.

Signal Function	RS-232	HP-IB	HP-IL	Signal Conditions
XTAL Freq	U401-2, 3	U301-2, 3	U501-2, 3	4 MHz
Addr. bit 15	U401-20	U301-20	U501-20	4.36 Hz
0	U401-40	U301-40	N/A	2 MHz
R/W	U401-7	U301-7	U501-7	HIGH
System Int.	U401-30	U301-30	U501-30	HIGH
I/O Int.	U401-12	U301-12	U501-12	HIGH

6. For all I/O modules, take the signatures listed under the appropriate Free Run SA Loop table to verify the I/O processor kernel.

For RS-232 only:

If any of the data bus signatures are bad on JU201, remover RAM U202. With power OFF, re-install JU201, then switch the power ON and remover JU201. Take the signatures given in the W/O RAM column to determine if the RAM was causing the failure.

7. If no bad signatures are found, the problem could still be the input latch, output latch, address decoder, or the status latch.

   Problems with these circuits could also cause failures during the I/O Free Run SA. If either of these conditions exist, use the appropriate I/O's Interface SA Loop to check the interface betwen the I/O and the A11 system Processor board.

8. If the failure persists, refer to the specific I/O module troubleshooting procedures that follow.

RS-232 Troubleshooting

1. Set board A11 S406 to an SA Program Loop position (any position from 1 to 15).

2. Connect an RS-232 jumper connector (1251-0063) configured for loop back to the interface RS-232 connector (see figure below).

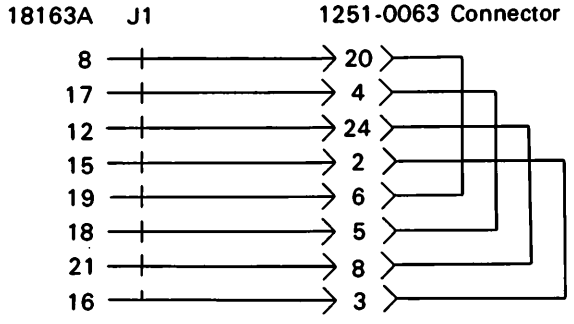

1251-0063 RS232 Loop Back Connector

3. Switch the HP 4945A ON.

4. Check the following signals on the serial I/O chip. Frequencies are approximate.

Check	Signal
U102 - 35 (MR)	Low
U102 - 16 (XTAL)	2 MHz
U102 - 30 (INTRPT)	Low
U102 - 14 (CS2)	45 kHz
U102 - 18 (DOSTR)	22 kHz
U102 - 21 (DISTR)	396 kHz

5. Check the RS-232 waveforms to verify the loop back path.

6. If all the above checks are good, the serial I/O chip may still be bad.

HP-IL Troubleshooting

1. Set board A11 S406 to an SA program Loop position (any position from 1 to 15).

2. Connect an HP-IL cable (8120-3383) to the interface HP-IL connector.

3. Switch the HP 4945A ON.

4. Check the following signals on the HP-IL chip. Frequencies are approximate.

Check	Signal
U101-23, 24 (LCI, LC2)	475 to 550 nsec period
U101 - 27 (WR)	8 kHz
U101 - 26 (RD)	300 kHz
U101 - 28 (CS)	8 kHz

5. Check the HP-IL waveforms.

6. If all the above checks are good, the HP-IL chip may still be bad.

HP-IB Troubleshooting

1. Set board A11 S406 to an SA Program Loop (any position from 1 to 15). Connect a Signature Analyzer as explained in the HP-IB SA Loop A table.

2. Switch the HP 4945A ON.

3. Check the following signals on the HP-IB chip. Frequencies are approximate.

Check	Signal
U101 - 9 (INT)	High
U101 - 19 (Reset)	High
U101 - 3 (CE)	45 kHz
U101 - 4 (WE)	45 kHz
U101 - 5 (DBIN)	45 kHz
U101 - 18 (0)	2 MHz
U202 - 2 (CLK for SA)	10 kHz
U202 - 3 (ST/SP for SA)	85 Hz

4. Take the signatures listed in the HP-IB SA Loop A. If all signatures are good, it is still possible that the HP-IB chip is bad.

NOTE: There is a potential ESD problem with U102 and U202. If these parts are failing, this could be the cause.

HP-IL Waveforms

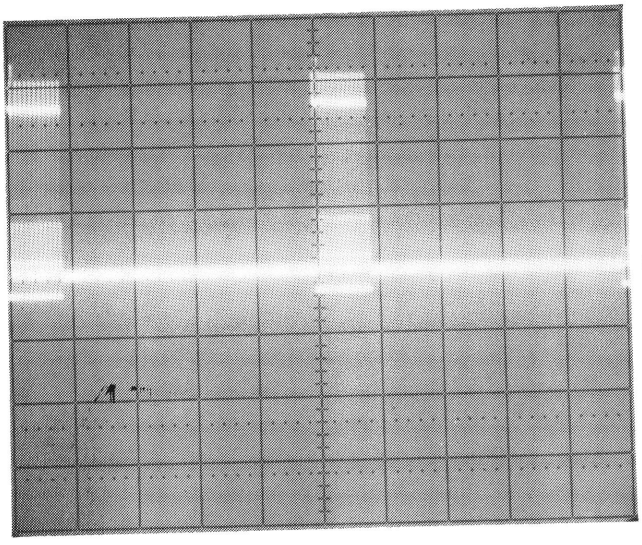

Horiz - 50 usec/div
Vert - 2 V/div

U101 - 18, T200 - 4

The period between bursts is 210 usec. Each burst is 48 usec.

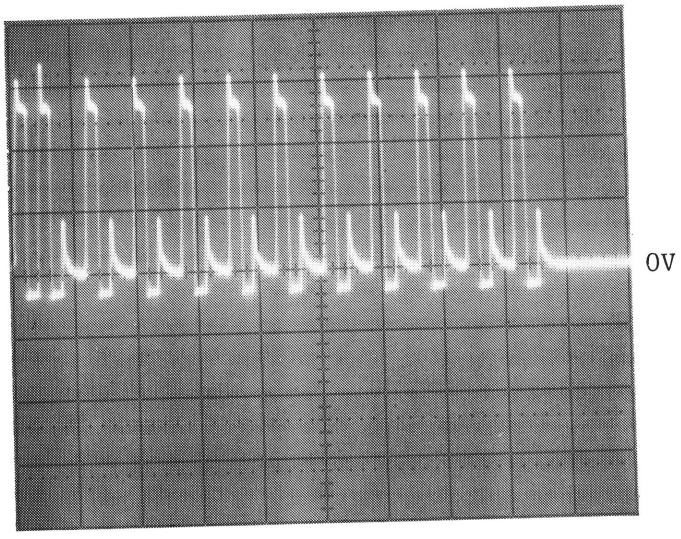

Horiz - 5 usec/div
Vert - 2 V/div

This shows the burst expanded.

12 pulses per burst with a low time between pulses of 1 usec.

HP-IL Waveforms

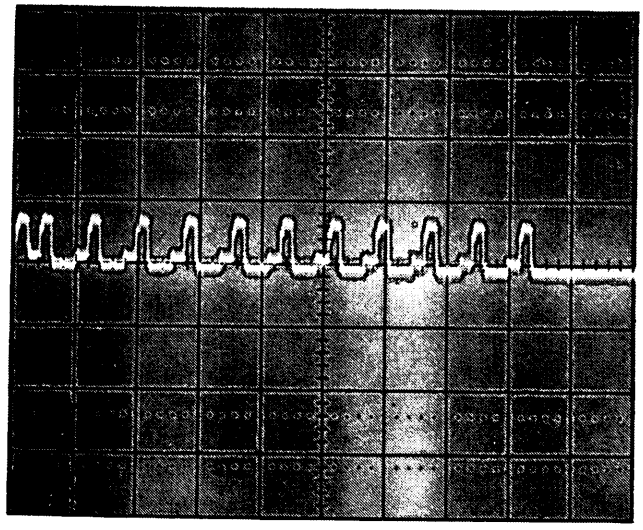

Horiz - 5 usec/div
Vert - 2 V/div

T200 pins 1, 2, 9, and 10

12 pulses, period is 4 usec.

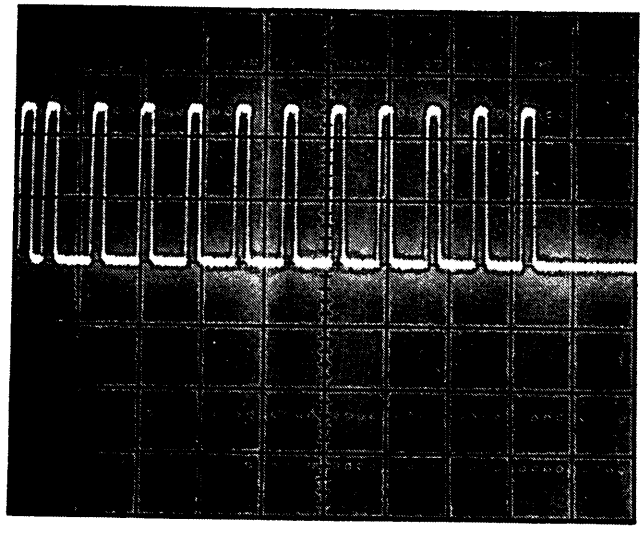

Horiz - 5 usec/div
Vert - 2 V/div

U101 pins 19 and 20

12 pulses, period is 4 usec.

HPIL Waveforms

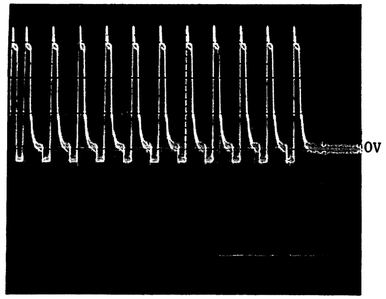

Horiz - 5 usec/div
Vert - 2 V/div

U101 - 17, T200 - 6

12 pulses, low time between pulses is 1 usec

RS-232 Waveforms

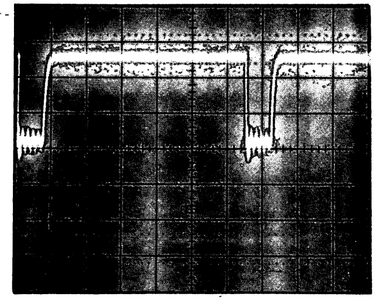

Horiz - 1 usec/div
Vert - 2 V/div

U102 - 15 (BAUD OUT), U102 - 9 (RCLK), U103 - 12 and 13
U102 - 38, U203 - 8

Depending upon which point is probed:

Period between pulses is 5.5 or 5.8 usec.
Pulse width is .8 or 1 usec.

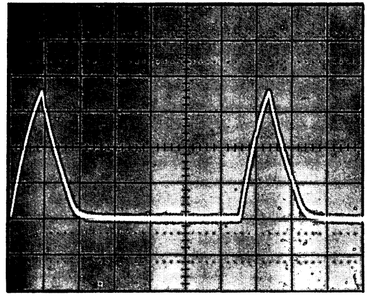

Horiz - 1 usec/div
Vert - 5 V/div

U103 - 11, U203 - 10

Period between pulses is 5.5 usec.
Pulse width is 2 usec.

RS-232 Waveforms

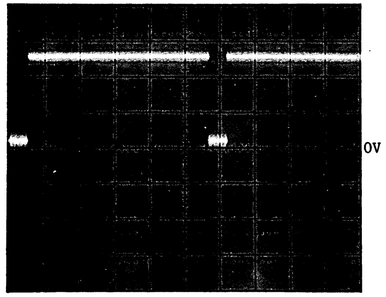

Horiz - .2 msec/div
Vert - 2 V/div

U102 - 11, U103 - 2 (DOUT): Voltage level = 3.7 volts
U102 - 10, U 203 - 11 (DIN): Voltage level = 4.6 volts

Period between pulses is 1.15 msec.
Pulse width is 105 usec.

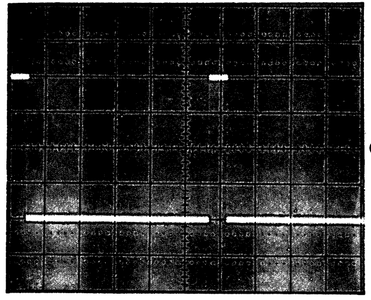

Horiz - .2 msec/div
Vert - 5 V/div

U103 - 3, U203 - 13

Times are same as previous photo but waveform is inverted and at RS-232 levels.

RS-232 Waveforms

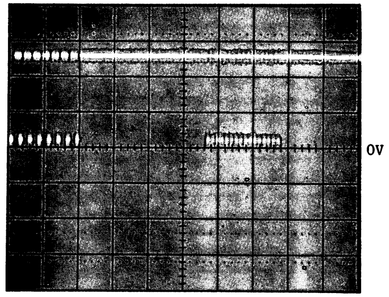

Horiz - .2 msec/div
Vert - 2 V/div

U102 - 33, U103 - 4 and 5 (DTR)
U102 - 37, U203 - 3 (DSR)

Period is 750 usec between bursts.
Low level pulse time is 20 usec.
High level pulse time is 40 usec.

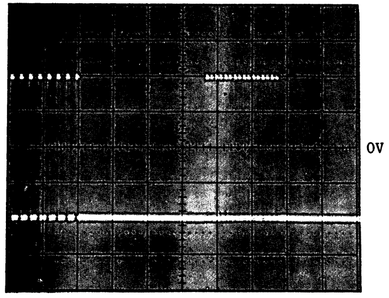

Horiz - .2 msec/div
Vert - 5 V/div

U103 - 6, U203 - 1

Times are same as previous photo but waveform is inverted and at RS-232 levels.

RS-232 WAVEFORMS

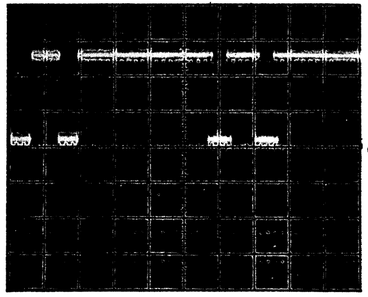

Horiz - .2 msec/div
Vert - 2 V/div

U102 - 32, U103 - 9 and 10 (RTS) Voltage level = 3.8 volts
U102 - 36, U203 - 6 (CTS) Voltage level = 4.7 volts

The pulses are low for 110 usec.
The high time between pulses is 160 usec.
The period from the start of the second pulse to the beginning of the next two pulses is 750 usec.

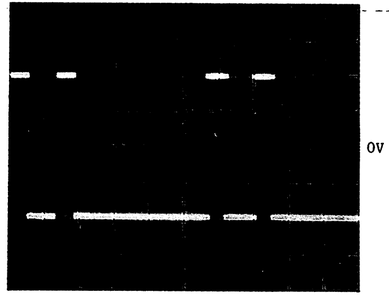

Horiz - .2 msec/div
Vert - 5 V/div

U103 - 8, U203 - 4

Times are same as previous photo but waveform is inverted and at RS-232 levels.

Table 8-59. HP-IB Free Run SA Loop (2.0 SOFTWARE)

PCA: 18162A

Test Condition: Board A11 switch S406 in any position 1 - 15.
18162A jumper JU501 removed AFTER power on.

Signature Analyzer Connections:

START	U301-20	A15	Rising Edge
STOP	U301-20	A15	Rising Edge
CLOCK	U301-8	DS	Rising Edge

+5 v Reference = 0001 * = Not blinking

JU501- 1 = F8UA
2 = 2A80
3 = 08H1
4 = 3571
5 = 3F48
6 = A6A7
7 = F1H2
8 = 74P9

U502- 2 = UUUU
5 = 5555
6 = CCCC
9 = 7F7F
12 = 5H21
15 = 0AFA
16 = UPFH
19 = 52F8

U301-13 = HC89
14 = 2H70
15 = HPP0
16 = 1293
17 = HAP7
18 = 3C96
19 = 3827

U604- 4 = 4H79
5 = 5FU8
6 = 1181
7 = 4H79

U503- 3 = 0001*
5 = 0001*
6 = 0001*

Table 8-60. RS232 Free Run SA Loop (2.0 SOFTWARE)

PCA: 18163A

Test Condition: Board A11 switch S406 in any position 1 - 15.
Remove JU201 on 18163A AFTER power on.

Signature Analyzer Connections:

START	U401-20	A15	Rising Edge
STOP	U401-20	A15	Rising Edge
CLOCK	U401-8	DS	Rising Edge

+5 v Reference = 0001 * = Not Blinking

With RAM

JU201- 1 = 5F0F
2 = 9CC8
3 = UUP4
4 = 75F5
5 = A0F5
6 = 1P4C
7 = 6H0U
8 = CF32

W/O RAM

JU201- 1 = 559C
2 = 9CC8
3 = U673
4 = 75F5
5 = A0F5
6 = 1P4C
7 = 6H0U
8 = CF32

U303- 2 = UUUU
5 = 5555
6 = CCCC
9 = 7F7F
12 = 5H21
15 = 0AFA
16 = UPFH
19 = 52F8

U401-13 = HC89
14 = 2H70
15 = HPP0
16 = 1293
17 = HAP7
18 = 3C96
19 = 3827

U403-20 = AUPP

U502- 7 = 4P0A
10 = 0996
11 = 0000

U503- 1 = 0001*
3 = 0001*
6 = 0996
11 = 0000
12 = 0000*

U504-12 = 0000
13 = 0001

Table 8-61. HP-IL Free Run SA Loop (2.0 SOFTWARE)

PCA: 18165A

Test Condition: Board A11 switch S406 in any position 1 - 15.
18165A Jumper JU403 removed AFTER power on.

Signature Analyzer Connections:

START	U501-20	A15	Rising Edge
STOP	U501-20	A15	Rising Edge
CLOCK	U501-8	DS	Rising Edge

+5 v Reference = 0001 * = Not Blinking

JU403-11 = 2P64
12 = 1UUA
13 = 072P
14 = 05U0
15 = H16H
16 = 9H71
17 = A5H9
18 = 1AF9

U501-13 = HC89
14 = 2H70
15 = HPP0
16 = 1293
17 = HAP7
18 = 3C96
19 = 3827

U503- 2 = UUUU
5 = 5555
6 = CCCC
9 = 7F7F
12 = 5H21
15 = 0AFA
16 = UPFH
19 = 52F8

U302- 4 = 4H79
5 = 5FU8
6 = 1181
7 = 4H79

U504- 3 = 0001*
6 = 0001*
8 = 0000
10 = 0000*

Table 8-62. HP-IB SA Loop A (2.0 SOFTWARE)

PCA: 18162A

Test Condition: Board A11 switch S406 in any position 1 - 15.

Signature Analyzer Connections:

START	U202-3	IFC	Falling Edge
STOP	U202-3	IFC	Falling Edge
CLOCK	U202-2	REN	Rising Edge

+5 v Reference = H9A0

U101-31 = 04HH
32 = 362P
33 = H275
34 = 25PC
35 = 6P61
36 = 127C
37 = 3H17
38 = U478

U102- 2 = U478
3 = 3H17
4 = 127C
5 = 6P61
6 = 25PC
7 = H275
8 = 362P
9 = 04HH

Use scope to check for:

U202- 4 = high
5 = high
6 = high
7 = low going pulse every 25 msec.
8 = high going pulse every 25 msec.
9 = low going pulse every 25 msec.

HP-IB Interface Loop (2.0 SOFTWARE)

PCA: 18162A

Test Condition: Put A11 TP2 in Free Run position. Remove A11 JU602. 18162A jumper JU501 removed AFTER power on.

Signature Analyzer Connections On A11:			Checks:
START	A11 TP1-3	Rising	Interface circuitry
STOP	A11 TP1-4	Rising	between the pod and
CLOCK	A11 TP1-1	Rising	the system processor.

+5 v Reference = 0003 * = Not blinking

U100- 1 = UUUU
2 = FFFF
3 = 0000*
4 = P3C9
5 = 0000
6 = 0003*
13 = 5HPC
14 = 77A1
15 = HP89

U200- 1 = HP89
2 = 0000*
4 = HP89
5 = 0000*
9 = 0000*
10 = HP89
11 = 0000*
12 = 0000*

U300- 1 = 0000*
11 = 5HPC

U400- 1 = 77A1
11 = 0003*

U500- 1 = 77A1
2 = 0003*
3 = 0003*
4 = 0000*
9 = 0000*
10 = 5HPC
11 = 0003*
12 = 0003*

RS-232 Interface Loop (2.0 SOFTWARE)

PCA: 18163A

Test Condition: Put A11 TP2 in Free Run position. Remove A11 JU602. 18163A jumper JU201 removed AFTER power on.

Signature Analyzer Connections On A11:			Checks:
START	A11 TP1-3	Rising	Interface circuitry
STOP	A11 TP1-4	Rising	between the pod and
CLOCK	A11 TP1-1	Rising	the system processor.

+5 v Reference = 0003 * = Not blinking

U200- 1 = HP89
2 = 0000*
4 = HP89
5 = 0000*
9 = 0000*
10 = HP89
11 = 0000*
12 = 0000*

U300- 1 = UUUU
2 = FFFF
3 = 0000*
4 = P3C9
5 = 0000
6 = 0003*
13 = 5HPC
14 = 77A1
15 = HP89

U400- 1 = 0000*
11 = 5HPC

U500- 1 = 77A1
11 = 0003*

U501- 5 = 77A1
6 = 0003*
7 = 0000*
9 = 0000*
10 = 5HPC
11 = 0003*
12 = 0003*

HP-IL Interface Loop (2.0 SOFTWARE)

PCA: 18165A

Test Condition: Put A11 TP2 in Free Run position. Remove A11 JU602. 18165A jumper JU403 removed AFTER power on.

Signature Analyzer Connections On A11:			Checks:
START	A11 TP1-3	Rising	Interface circuitry
STOP	A11 TP1-4	Rising	between the pod and
CLOCK	A11 TP1-1	Rising	the system processor.

+5 v Reference = 0003 * = Not blinking

U100- 1 = UUUU
2 = FFFF
3 = 0000*
4 = P3C9
5 = 0000
6 = 0003*
13 = 5HPC
14 = 77A1
15 = HP89

U300- 1 = HP89
2 = 0000*
4 = HP89
5 = 0000*
9 = 0000*
10 = HP89
11 = 0000*
12 = 0000*

U500- 1 = 0000*
11 = 5HPC

U400- 1 = 77A1
11 = 0003*

U200- 1 = 77A1
2 = 0003*
3 = 0003*
4 = 0000*
9 = 0000*
10 = 5HPC
11 = 0003*
12 = 0003*

8-38. MODE 18: Jitter Calibration (A6)

This mode calibrates the jitter circuits with signals from the transmitter and then checks the resulting calibration constants to within reasonable limits. This test is a functional test as opposed to a performance test.

Following is a summary of the Mode 18 tests.

Data Segment	Test	Results Displayed Should Be	Path
1	AJ OFFSET 4-300HZ	0 +10/-0	1
2	PJ OFFSET 4-300HZ	0 +10/-0	2
3	AJ OFFSET 20-300HZ	0 +10/-0	3
4	PJ OFFSET 20-300HZ	0 +10/-0	4
5	AJ OFFSET 4-20HZ	0 +10/-0	5
6	PJ OFFSET 4-20HZ	0 +10/-0	6
7	AJ GAIN 4-300HZ	688+-125	7
8	PJ GAIN 4-300HZ	688+-125	8
9	AJ GAIN 20-300HZ	688+-125	9
10	PJ GAIN 20-300HZ	688+-125	10
11	AJ GAIN 4-20HZ	688+-125	11
12	PJ GAIN 4-20HZ	688+-125	12
13 thru 16 not used			

Diagnostics - Mode 18

Following is a description of the Mode 18 paths. All checks are made on A6.

Path 1

The transmitter is set to 1004 Hz single tone. Offset is measured for amplitude jitter in the 4 to 300 Hz band.

First check for the proper input signal at TP8 AJIN. This signal should be a 0 to +1.1 and 0 to +1.9 volt, full wave rectified signal, at 2008 Hz, switching between the two voltage levels at a 5 second rate.

Check the output of the 4 Hz high pass filter, U504 pin 1. Look for a +1.1 volt and a +1.9 volt, full wave rectified signal riding symmetrically about a -.3 volt dc level switching between the two voltage levels at a 5 second rate.

If the previous check is good, check TP8 JOUT for a 2.2 volt and 3.8 volt, inverted, full wave rectified signal riding symmetrically about a +.3 volt dc level, switching between the two voltage levels at a 5 second rate.

Check the output of the level shifter, U104 pin 7, for the same signal as the previous check.

This signal is applied to the 300 Hz low pass filter. The filter output at TP1 JTR300 should be a dc voltage near ground (+-0.5 volts). The multiplexer output at TP1 MUX20 should be near ground also.

Path 2

The transmitter is set to 1004 Hz single tone. Offset is measured for phase jitter in the 4 to 300 Hz band.

First check for the proper input signal at TP8 PJIN. This signal should be a 2.2 volt and 3.8 volt peak-to-peak sine wave, at 1004 Hz, with no dc offset. The signal levels alternately switch at a 5 second rate.

Check the output of the sine-to-square wave converter at TP8 SWI. This should be a 0 to +5 volt square wave at 1004 Hz.

If the previous checks are correct, check the phase lock loop output at U406 pin 1. This signal should be a 0 to +5 volt square wave at 2008 Hz. This signal is applied to the level shifter.

Check the output of the level shifter, U104 pin 1, for the previous square wave except here it is symmetrical about ground.

This level shifted signal is applied to the 300 Hz low pass filter. The filter output at TP1 JTR300 should be a dc voltage near ground (+-0.5 volts). The multiplexer output at TP1 MUX20 should be near ground also.

Diagnostics - Mode 18

Path 3

The transmitter is set to 1004 Hz single tone. Offset is measured for amplitude jitter in the 20 to 300 Hz band.

First check for the proper input signal at TP8 AJIN. This signal should be a 0 to +1.1 and 0 to +1.9 volt, full wave rectified signal, at 2008 Hz, switching between the two voltage levels at a 5 second rate.

Check the output of the 20 Hz high pass filter, U504 pin 8. Look for a +1.1 volt and a +1.9 volt, full wave rectified signal riding symmetrically about a -.3 volt dc level, switching between the two voltage levels at a 5 second rate.

If the previous check is good, check TP8 JOUT for a 2.2 volt and 3.8 volt, inverted, full wave rectified signal riding symmetrically about a +.3 volt dc level, switching between the two voltage levels at a 5 second rate.

Check the output of the level shifter, U104 pin 7, for the same signal as the previous check.

This signal is applied to the 300 Hz low pass filter. The filter output at TP JTR300 should be a dc voltage near ground (+-0.5 volts). The multiplexer output at TP1 MUX20 should be near ground also.

Path 4

The transmitter is set to 1004 Hz single tone. Offset is measured for phase jitter in the 20 to 300 Hz band.

First check for the proper input signal at TP8 PJIN. This signal should be a 2.2 volt and 3.8 volt peak-to-peak sine wave, at 1004 Hz, with no dc offset. The signal levels alternately switch at a 5 second rate.

Check the output of the sine-to-square wave converter at TP8 SWI. This should be a 0 to +5 volt square wave at 1004 Hz.

If the previous checks are correct, check the phase lock loop output at U406 pin 1. This signal should be a 0 to +5 volt square wave at 2008 Hz. This signal is applied to the level shifter.

Check the output of the level shifter, U104 pin 1, for the previous square wave except here it is symmetrical about ground.

This level shifted signal is applied to the 300 Hz low pass filter. The filter output at TP1 JTR300 should be a dc voltage near ground (+-0.5 volts). The multiplexer output at TP1 MUX20 should be near ground also.

Diagnostics - Mode 18

Path 5

The transmitter is set to 1004 Hz single tone. Offset is measured for amplitude jitter in the 4 to 20 Hz band.

Check for the proper input signal at TP8 AJIN. This signal should be a 0 to +1.1 and 0 to +1.9 volt, full wave rectified signal, at 2008 Hz, switching between the two voltage levels at a 5 second rate.

Check the output of the 4 Hz high pass filter, U504 pin 8. Look for a +1.1 volt and a +1.9 volt, full wave rectified signal riding symmetrically about a -.3 volt dc level switching between the two voltage levels at a 5 second rate.

If the previous check is good, check TP8 JOUT for a 2.2 volt and 3.8 volt, inverted, full wave rectified signal riding symmetrically about a +.3 volt dc level, switching between the two voltage levels at a 5 second rate.

Check the output of the level shifter, U104 pin 7, for the same signal as the previous check.

This signal is applied to the 20 Hz low pass filter. The filter output at TP1 JTR20 should be a dc voltage near ground (+-0.5 volts). The multiplexer output at TP1 MUX20 should be near ground also.

Path 6

The transmitter is set to 1004 Hz single tone. Offset is measured for phase jitter in the 4 to 20 Hz band.

Check for the proper input signal at TP8 PJIN. This signal should be a 2.2 volt and 3.8 volt peak-to-peak sine wave, at 1004 Hz, with no dc offset. The signal levels alternately switch at a 5 second rate.

Check the output of the sine-to-square wave converter at TP8 SWI. This should be a 0 to +5 volt square wave at 1004 Hz.

If the previous checks are correct, check the phase lock loop output at U406 pin 1. This signal should be a 0 to +5 volt square wave at 2008 Hz. This signal is applied to the level shifter.

Check the output of the level shifter, U104 pin 1, for the previous square wave except here it is symmetrical about ground.

This level shifted signal is applied to the 20 Hz low pass filter. The filter output at TP1 JTR20 should be a dc voltage near ground (+-0.5 volts). The multiplexer output at TP1 MUX20 should be near ground also.

Diagnostics - Mode 18

Path 7

The gain constant is measured for amplitude jitter in the 4 to 300 Hz band.

Check for the proper input signal at TP8 AJIN. This signal should be a 0 to +1.2 volt, full wave rectified signal. See Figure "Mode 18 - 1". The signal frequency is 2048 Hz with a 100 Hz envelope.

Check the output of the 4 Hz high pass filter, U504 pin 1. Look for the same signal as in the previous check with a slight dc offset.

If the previous check is good, check TP8 JOUT for a 2.4 volt, inverted, full wave rectified signal riding symmetrically about a +.15 volt dc level. See Figure "Mode 18 - 2". The signal frequency is 2048 Hz with a 100 Hz envelope.

Check the output of the level shifter, U104 pin 7, for the same signal as the previous check.

This signal is applied to the 300 Hz low pass filter. The filter output at TP1 JTR300 should be a 100 Hz sine wave at 2.4 volts peak-to-peak. The multiplexer output at TP1 MUX20 should be the same signal.

Path 8

The phase jitter gain constant is measured in the 4 to 300 Hz band.

Check for the proper input signal at TP8 PJIN. This signal should be a 2.4 volt peak-to-peak modulated sine wave, with no dc offset. See Figure "Mode 18 - 3". The signal frequency is 1024 Hz with a 100 Hz envelope.

Check the output of the sine-to-square wave converter at TP8 SWI. This should be a 0 to +5 volt square wave at 1024 Hz.

If the previous checks are correct, check the phase lock loop output at U406 pin 1. This signal should be a 0 to +5 volt square wave at 2048 Hz. This signal is applied to the level shifter.

Check the output of the level shifter, U104 pin 1, for the previous square wave except here it is symmetrical about ground.

This level shifted signal is applied to the 300 Hz low pass filter. The filter output at TP1 JTR300 should be a 100 Hz sine wave at 2.8 volts peak-to-peak. The multiplexer output at TP1 MUX20 should be the same signal.

Path 9

The gain constant is measured for amplitude jitter in the 20 to 300 Hz band.

Check for the proper input signal at TP8 AJIN. This signal should be a 0 to +1.2 volt, full wave rectified signal.See Figure "Mode 18 - 1". The signal frequency is 2048 Hz with a 100 Hz envelope.

Check the output of the 20 Hz high pass filter, U504 pin 8. Look for the same signal as in the previous check with a slight dc offset.

If the previous check is good, check TP8 JOUT for a 2.4 volt, inverted, full wave rectified signal riding symmetrically about a +.14 volt dc level. See Figure "Mode 18 - 2". The signal frequency is 2048 Hz with a 100 Hz envelope.

Check the output of the level shifter, U104 pin 7, for the same signal as the previous check.

This signal is applied to the 300 Hz low pass filter. The filter output at TP1 JTR300 should be a 100 Hz sine wave at 2.4 volts peak-to-peak.The multiplexer output at TP1 MUX20 should be the same signal.

Path 10

The phase jitter gain constant is measured in the 20 to 300 Hz band.

Check for the proper input signal at TP8 PJIN. This signal should be a 2.4 volt peak-to-peak modulated sine wave, with no dc offset. See Figure "Mode 18 - 3". The signal frequency is 1024 Hz with a 100 Hz envelope.

Check the output of the sine-to-square wave converter at TP8 SWI. This should be a 0 to +5 volt square wave at 1024 Hz.

If the previous checks are correct, check the phase lock loop output at U408 pin 1. This signal should be a 0 to +5 volt square wave at 2048 Hz. This signal is applied to the level shifter.

Diagnostics - Mode 18

Check the output of the level shifter, U104 pin 1, for the previous square wave except here it is symmetrical about ground.

This level shifted signal is applied to the 300 Hz low pass filter. The filter output at TP1 JTR300 should be a 100 Hz sine wave at 3.0 volts peak-to-peak. The multiplexer output at TP1 MUX20 should be the same signal.

Path 11

The gain constant is measured for amplitude jitter in the 4 to 20 Hz band.

Check for the proper input signal at TP8 AJIN. This signal should be a +1.2 volt, full wave rectified signal, at 2048 Hz. The signal is similar to Figure "Mode 18 - 1", except the 10 Hz difference frequency is riding on the carrier (hard to detect on scope).

Check the output of the 4 Hz high pass filter, U504 pin 8. Look for the same signal as in the previous check with a slight dc offset.

If the previous check is good, check TP8 JOUT for a 2.4 volt, inverted, full wave rectified signal riding symmetrically about a .15 volt dc level. The signal is similar to Figure "Mode 18 - 2" except the 10 Hz difference frequency is riding on the carrier (hard to detect on scope).

Check the output of the level shifter, U104 pin 7, for the same signal as the previous check.

This signal is applied to the 20 Hz low pass filter. The filter output at TP1 JTR20 should be a 10 Hz sine wave at 2.4 volts peak-to-peak. The multiplexer output at TP1 MUX20 should be the same signal.

Path 12

The phase jitter gain constant is measured in the 4 to 20 Hz band.

Check for the proper input signal at TP8 PJIN. This signal should be a 2.4 volt peak-to-peak modulated sine wave, at 1024 Hz, with no dc offset. The 10 Hz difference frequency is riding on the carrier. This signal is similar to Figure "Mode 18 - 3", except the envelope frequency is 10 Hz (hard to detect on scope).

Check the output of the sine-to-square wave converter at TP8 SWI. This should be a 0 to +5 volt square wave at 1024 Hz.

Diagnostics - Mode 18

If the previous checks are correct, check the phase lock loop output at U406 pin 1. This signal should be a 0 to +5 volt square wave at 2048 Hz. This signal is applied to the level shifter.

Check the output of the level shifter, U104 pin 1, for the previous square wave except here it is symmetrical about ground.

This level shifted signal is applied to the 20 Hz low pass filter. The filter output at TP1 JTR20 should be a 10 Hz sine wave at 2.8 volts peak-to-peak. The multiplexer output at TP1 MUX20 should be the same signal.

Diagnostics - Mode 18

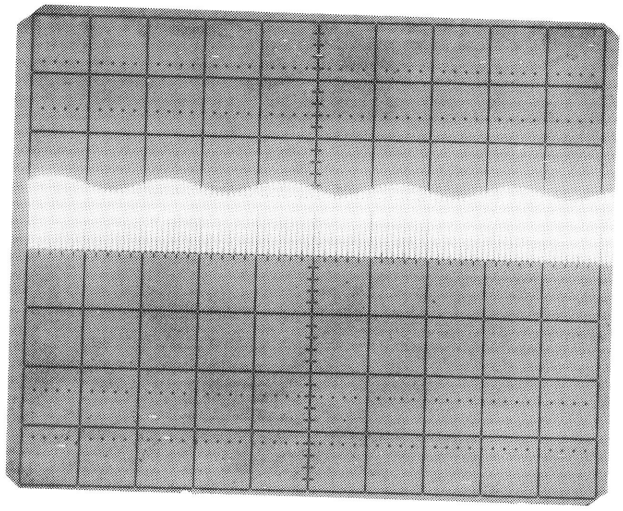

Vert: 1V/div
Horiz: 5 msec/div

Mode 18 -1

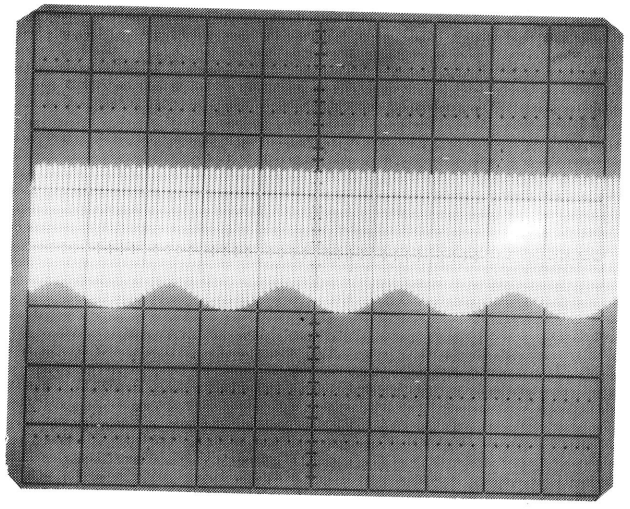

Vert: 1 V/div
Horiz: 5 msec/div

Mode 18-2

Diagnostics - Mode 18

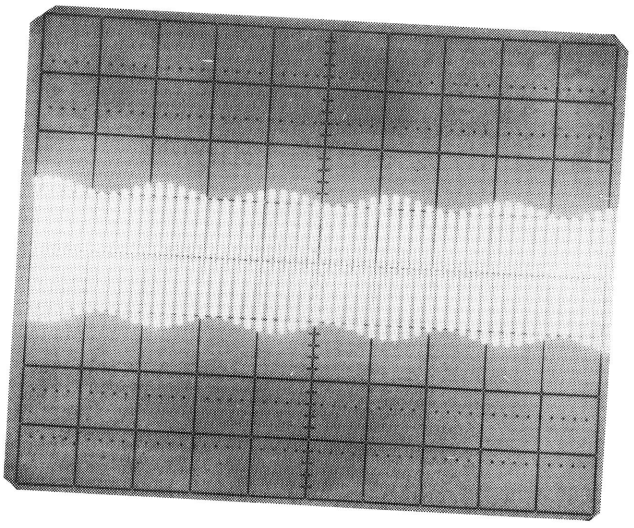

Vert: 1 V/div
Horiz: 5 msec/div

Mode 18 - 3

Figure 8-12. Mode 18 Waveforms

Receiver Adjustments

Adjustment	Component	Specifications
Level Accuracy	A1R54	Input and A1 TP1 same level (3.46 V trms at 600 ohms)
1010 Hz Notch Filter	A2R134 A2R135 A2R133	1010 Hz TP NOTCH2 1025 Hz TP NOTCH3 995 Hz TP NOTCH1
P/AR Filter	A2R132	adjust for 0 degrees phase A2R131
US EDD Hi-Q Filters	A7R72	adjust for 0 degrees phase A7R11
US EDD AGC	A7R35	TP3 reads 2.19 V rms +50 mV
Phase Hit Balance	A9R28	50% duty cycle at TP2
NLD 1990 Hz Detector	A3R9	1990 Hz +-1 Hz at U701 pin 5
NLD 520 Hz Bandpass Filter	A3R10 A3R12 A3R22 A3R32	90 degrees phase at 562 Hz 90 degrees phase at 492 Hz 90 degrees phase at 555 Hz 0 degrees phase at 480 Hz
Hold Coil	A1R2	24 ma +.1 ma
2-Wire Return Loss	A17R98	ERL reading of 0.0 dB
Real Time Clock Oscillator	A12C34	within 1.00001 seconds

CRT Adjustments

Adjustment	Component	Specifications
Focus	A19R14	best focus
Intensity	A19R52	500 c/m2, full raster, no faceplate
Horizontal Size	A19R9	16.5 cm +-.2 cm
Horizontal Position		centered
Vertical Size	A19R65	11 cm +- .2 cm
Vertical Position	A19R46	centered
Linearity	A19R64	Top and bottom characters are approximately equal size. (Time/Date at top may be smaller size for best display).
Yoke	Yoke Clamp	level display

5-3. Power Supply Adjustments

Newer HP 4945As have access holes in the power supply sheet metal that allow the adjustments to be made with just the top and bottom covers removed. On the earlier instruments, these access holes are not present and the left side power supply (A29 and A20) must be swung out to access the adjustments.

If the left side supply must be swung out, refer to the power supply removal procedures in Section 6.

WARNING

LETHAL VOLTAGES ARE PRESENT ON THE A20 BOARD EVEN WHEN THE POWER SWITCH IS OFF.

LETHAL VOLTAGES ARE PRESENT ON THE POWER SUPPLY BOARDS AND ON THE A19 DISPLAY DRIVER BOARD WHEN AC POWER IS ON.

USE A NON-CONDUCTIVE ADJUSTMENT TOOL WHEN PERFORMING THE POWER SUPPLY ADJUSTMENTS.

There are two power supply adjustment procedures. The DC Calibration Procedure (5-4) should be performed after any repairs are made to either A28 or A29 before they are reinstalled in the instrument.

The AC Calibration Procedure (5-12) should be performed with the supplies installed in the instrument, thus making the HP 4945A the load.

5-4. DC Calibration Procedure

This procedure should be performed on both the A28 and A29 supplies before they are installed in the instrument.

5-5. Clock Circuit Calibration

1. Apply +40 VDC +- 1 volt (current limit set at 100mA)*

   + to F91
   - to Q3 collector (heatsink)

2. Monitor TP3 with scope. Ground probe at Q3 collector (heatsink). Adjust R12 for a 7 usec period (142.857 kHz). Refer to Figure Clock Waveform located in Section 8-17a.

   * **NOTE**: Damage will occur if current limit is not set at 100 mA.

5-6. +V1 Clock Modulation

1. Apply +40 VDC to clock bias circuit (as in step 1 of Clock Circuit Calibration).

2. Apply to +5.0 VDC +-0.1 volt to +V1 output:

   + to either side of L5
   - to minus side of C23.

3. Monitor TP3 with scope. Ground probe at Q3 collector (heatsink). Vary V1 adjustment (R37) to see that clock waveform becomes frequency modulated. Range should be from 0 to 80% of clock period.

4. Adjust V1 so that clock waveform just begins to FM.

5-7. +V4 Output Calibration

1. Apply the following voltages to +V2 output:

   + to either side of L6
   - to P1 pin 18

   For A28 apply +19 +- 1 volt
   For A29 apply +16 +- 1 volt

2. Monitor +V4 output with voltmeter:

   + to P1 pin 19
   - to P1 pin 18

3. Vary +V4 adjustment (R56) to verify regulation range:

   For A28 range should be +14.25 to +15.75 volts
   For A29 range should be +11.40 to +12.60 volts

4. Adjust R56 to set +V4 output:

   For A28 set +V4 for +15 +- .05 volts
   For A29 set +V4 for +12 +- .05 volts

5-8. -V5 Output Calibration

1. Apply the following voltages to -V3 output:

   + to P1 pin 18
   - to either side of L7

   For A28 apply +19 +- 1 volt
   For A29 apply +16 +- 1 volt

2. Monitor -V5 output with voltmeter:

   + to P1 pin 21
   - to P1 pin 18

3. Vary -V5 adjustment (R59) to verify regulation range:

   For A28 range should be -14.25 to -15.75 volts
   For A29 range should be -11.40 to -12.60 volts

4. Adjust R59 to set -V5 output:

   For A28 set -V5 for -15 +- .050 volts
   For A29 set -V5 for -12 +- .050 volts

5-9. +V1 Over-voltage Shutdown

1. Apply +40 VDC to clock bias circuit (as in step 1 of Clock Circuit Calibration).

2. Apply +5.0 VDC to +V1 (as in step 2 of +V1 Clock Modulation).

3. Monitor TP3 with scope. Ground probe at Q3 Collector (heatsink).

4. Monitor +V1 voltage with voltmeter:

   + to either side of L5
   - to minus side of C23

5. Observe FM clock on TP3 with scope. Slowly raise the value of the supply feeding +V1 until the clock on TP3 just shuts down. See that the value of +V1 at shutdown is between 6.2 and 6.8 VDC.

6. Return +V1 to 5.0 +- 0.1 volts. See that clock is still off.

7. Cycle the +40V supply. See that the clock returns.

5-10. +V4 Over-voltage Shutdown

1. Apply 40 VDC to clock bias crcuit (as in step 1 of Clock Circuit Calibration).

2. Apply 5.0 VDC to +V1 (as in step 2 of V1 Clock Modulation)

3. Apply 12 +- 0.5 volts to +V4:

   + to P1 pin 19
   - to P1 pin 18

4. Monitor +V4 voltage with voltmeter:
   + to P1 pin 19
   - to P1 pin 8

5. Monitor TP3 with scope. Ground probe at Q3 collector (heatsink).

6. Observe FM clock on TP3 with scope. Slowly raise the value of the supply feeding +V4 until the clock just shuts down. See that the value of +V4 at shutdown is between the following ranges:

   For A28 range should be 16 to 17.50 volts
   For A29 range should be 13 to 14.75 volts

7. Return +V4 to 12 +- 0.1 volts. See that clock is still off.

8. Cycle the +40V supply. See that the clock returns.

5-11. -V5 Over-voltage Shutdown

1. Apply 40VDC to clock bias circuit (as in step 1 of Clock Circuit Calibration).

2. Apply 5.0 VDC to +V1 (as in step 2 of +V1 Clock Modulation).

3. Apply 12 +- 0.5 volts to -V5:

   + to P1 pin 18
   - to P1 pin 21

4. Monitor -V5 voltage with voltmeter:

   + to P1 pin 21
   - to P1 pin 18

5. Monitor TP3 with scope. Ground probe at Q3 collector (heatsink).

6. Observe FM clock on TP3 with scope. Slowly raise the value of the supply feeding -V5 until the clock just shuts down. See that the value of -V5 at shut down is within the following range:

   For A28 range should be -16 to -17.50 volts
   For A29 range should be -13 to -14.75 volts

7. Return -V5 to 12 +- 0.1 volts. See that clock is still off.

8. Cycle the 40V supply. See that the clock returns.

5-12. AC Calibration Procedure

This procedure should be performed on both the A28 an A29 supplies after they are reinstalled in the instrument. This will ensure that the final calibration is done using the HP 4945A as the load for the supplies.

5-13. Clock Frequency Adjustment

The clock frequency should have been set under the DC Calibration Procedure (5-5, Clock Circuit Calibration) and should not be readjusted once the supplies are in the instrument.

5-14. +V1 Adjustment (+5 VOLT)

The +5 volt supply must be adjusted before the other supplies are adjusted. There are two +5 voltages, one on A28 and one on A29.

If the sheet metal covers do not have access holes, swing out the A29 and A20 assemblies (refer to Section 6-7, Power Supply Removal).

+5 NSY Adjust

1. Connect a DVM to A10TP1 (+5V) and A10TP2 (GND).

2. Adjust +V1 (R37) on A29 (left supply) for +5 volts +- .01 volt.

+5 CLN Adjust

1. Connect a DVM to A6TP8 (+5V) and A6TP7 (GND).

2. If the sheet metal covers have access holes, adjust +V1 (R37) on A28 (bottom supply) for +5 volts +- .01 volt.

If the sheet metal covers do not have access holes, carefully use a very short adjustment tool to reach the +V1 (R37) adjustment from the top of the HP 4945A. Adjust +V1 for +5 volts +- 0.1 volt.

5-15. +V4 Adjustment

+V4 is +12 volts on the A29 supply and +15 volts on the A28 supply.

If the sheet metal covers do not have access holes, swing out A29 and A20 (refer to Section 6-7, Power Supply Removal).

+12 Volt Adjust

1. Do the +5 volt NSY adjustment first.
2. Connect a DVM between A19J1 pin 3 (+12V) and ground.
3. Adjust +V4 on A29 (R56) for +12 volts +- .1 volt.

+15 Volt Adjust

1. Do the +5 volt CLN adjustment first.
2. Connect a DVM between A6TP5 (+15V) and ground.
3. If the sheet metal covers have access holes, adjust +V4 (R56) on A28 for +15 volts +- .1 volt.

   If the sheet metal covers do not have access holes, use a long adjustment tool to reach the +V4 (R56) adjustment from the top of the HP 4945A (between the A14 and A15 board guides). Adjust +V4 for +15 volts +0- .1 volt.

5-16. -V5 Adjustment

-V5 is -12 volts on the A29 supply and -15 volts on the A28 supply.

If the sheet metal covers do not have access holes, swing out A29 and A20 (refer to Section 6-7, Power Supply Removal).

-12 Volt Adjust

1. Do the +5 volt NSY adjustment first.
2. Connect a DVM between A19J1 pin 1 (-12V) and ground.
3. Adjust -V5 (R59) on A29 for -12 volts -.1 volt.

-15 Volt Adjust

1. Do the +5 volt CLN adjustment first.

2. Connect a DVM to A6TP4 (-15V) and ground.

3. If the sheet metal covers have access holes, adjust -V5 (R59) on A28 for -15 volts +- .1 volt.

   If the sheet metal covers do not have access holes, use a long adjustment tool to reach the -V5 (R59) adjustment from the top of the HP 4945A (between the A9 and A10 board guides). Adjust -V5 for -15 Volts +- .1 volt.

5-17. TRANSMITTER ADJUSTMENTS

5-18. Level Accuracy

Receiver: Level/Freq
Transmitter: 1004 Hz, 0.0 dBm, 600 ohms

Note: Use only 0.1% resistors or better. Refer to paragraphs 4-3 for recommended resistor part numbers.

1. Connect the 600 ohm, 0.1% load.

2. Connect a DVM (HP 3455A) to the transmitter output. Adjust the XMT level accuracy (A15R108) for 0.7746Vrms +-.002V.

3. Change the transmitter impedance to 900 ohms and verify the output level to be 0.9554 Vrms +-.004 V.

4. Change the transmitter impedance to 1200 ohms and verify the output level to be 1.098 Vrms +-.005 V.

5. Change the transmitter impedance to 135 ohms and verify the output level to be .3650 Vrms +-.002 V.

5-19. NLD Tone Balance and Level (Primary Method)

Receiver: Intermodulation Distortion
Transmitter: 0 dBm, 600 ohms

1. Connect the transmitter output to the receiver input.

2. For NLD balance, select and run diagnostic mode 52.

3. Adjust the NLD Balance (A15R106) so that the HP 4945A display reads 0.0 dB +- .1 dB. Failures and levels of .5 dB or greater are shown in inverse video.

4. Connect a true rms meter (HP 3403C) to the transmitter output. Adjust the NLD Gain (A15R105) until level is 0.775 V trms. Use the slow response time.

   Note: Other T-rms conversion meters can give different readings.

5-20. NLD Balance (Alternate Method)

Use this method for troubleshooting or performance verification.

Receiver: Intermodulation Distortion
Transmitter: 0 dBm, 600 ohms

1. Connect a spectrum analyzer to the transmitter output. Analyzer must have "Fast Fourier Transform" (FFT) with 0.02 Hz resolution.

   Following is the setup for te HP 3582A analyzer.

Marker ----- On	Freq. Span ----- 25 Hz
Mode Set --- Center	Input Mode ----- A
Coupling --- ac	Chan A Sense --- +10 dBV
Trig Level - Free run, repetitive	Scale ---------- 10 dB/div
	Passband shape - flat top
Display ---- Amplitude A	Amplitude Ref -- Normal

2. Set the center frequency at either 860 Hz or 1380 Hz.

   Press REL and then SET REF after the marker is on the peak. Check the other peaks.

3. Adjust the NLD Balance (A15R106) so that all four IMD tones have identical levels (within .1 dBm offset).

   Note: The adjustment interfaces between the four peaks and it may require several reference sets to adjust.

5-21. Alternate Channel Level (Primary Method)

Run diagnostic self-check mode 18 (checking 1104 Hz at -20 dBm mixed with 1004 Hz).

1. Connect the DVM (HP 3455A with math function) to A15TP2.

2. Run mode 18 path 1 (1004 Hz single tone).

3. Store Y and press % Error. The DVM should read 0.00 V rms +- .005 V.

4. Run mode 18 path 7.

5. Adjust the Alternate Channel Level (A15R107) for .485% +- .005 %. (This reading is adjusted for the wideband characteristics of the HP 3455A).

5-22. Alternate Channel Level (Alternate Method)

Use this method for troubleshooting or performance verification.

1. Run mode 18 path 7.

2. Connect a spectrum analyzer (HP 3582A) to A15TP2.

3. Look at the 1004 Hz and the 1104 Hz signals. The frequency difference should be 100 Hz and the 1104 Hz signal should be 20 dB less than the 1004 Hz signal.

5-23. Hold Coil Current For Transmitter and Receiver

Dial/Hold Setup: Transmit and receive hold on
Transmitter: 1004 Hz, 0 dBm
Receiver: Level/Freq

1. Connect a 12 Vdc +-.2V power supply, a 147 ohm (1%, 1/2W) resistor in series with the transmitter terminals (left) and then the receiver terminals (right). Connect the DVM across the resistor.

   Note: Do not reverse the TMT/RCV terminals during this test.

2. Check for 24 mA +- 0.1 mA (3.53 volt drop across resistor) on both the transmitter and receiver terminals. For the transmitter, adjust A18R2. For the receiver, adjust A1R2.

3. Loop 1004 Hz from the transmitter to the receiver at -40 dBm and check for any distortion (none allowed). The amplitude of the sinewave is reduced but it should remain sinusoidal while maintaining the 24 mA hold current.

   If the currents change, repair the holding current regulation circuits on A1 or A18 to achieve a good holding balance.

These holding circuit adjustments are designed for the specification and a response to a holding source from approximately 42.5 Vdc down to 8.5 Vdc with linear output current.

5-24. RECEIVER ADJUSTMENTS

5-25. Level Accuracy

Receiver: Level/Freq, 600 ohms
Transmitter: 1004 Hz, +13.0 dBm, 600 ohms

1. Put the A1 board on an extender. Loop the transmitter output to the receiver input. Alternately monitor the rceiver input level and the level at A1TP3 (SIGNAL) with a DVM. Adjust A1R54 (Input Level Adjust) for identical readings (approximately 3.460 V rms). This adjusts out any losses from A58 and A1.

5-26. 1010 Hz Notch Filter

Receiver: Level/Freq, 600 ohms
Transmitter: +13 dBm, 600 ohms

1. Put the A2 board on an extender board. Loop the transmitter ouput to receiver input.

2. Move the four-position shunt on A2 (JU2, 1010 Hz notch) to the left. Monitor the test points shown below at the frequencies listed. Set the appropriate adjustment for a null indication on the oscilloscope.

Test Point	Trmt Freq	Adjust
TP Notch 2	995 Hz	A2R133
TP Notch 3	1010 Hz	A2R134
TP Notch 4	1025 Hz	A2R135

3. Put the JU2 test shunt back to its original position.

5-27. P/AR Filter

Set up the HP 4945A as follows:

Receiver: P/AR, 0dBm, 600 ohms

Note: Refer to the HP 4192A Impedance Analyzer Manual (Para. 3-34) for reference information on the phase/gain measurement.

1. Set up the HP 4192A Impedance Analyzer as follows:

   0.5 volts output voltage
   Frequency - 1300 Hz
   Output Impedance - 50 ohms
   Averaging - ON (switch OFF and than back ON)
   Use the High Current Outputs
   Use 1 to 1 leads to the Channel A and B Reference inputs

2. Connect the HP 4192A High Current output to the HP 4945A receiver input. Overranging can be expected on the HP 4945A, but 0.5 volts input should not cause any internal gain.

3. Connect channels A and B of the HP 4192A to A2 TP1. Verify that the meter is calibrated and that the reading is less than or equal to 0.01 degrees phase.

4. Connect channel A to A2 TP1. Connect channel B to A2 TP2.

5. Adjust A2R132 (PAR1) for 0.0 degrees.

6. Move channel B to A2 TP3 and adjust A2R131 (PAR2) for 0.0 degrees. This adjustment eliminates any phase difference between PAR1 and PAR3.

7. Check the phase difference between A2 TP PAR and A2 TP NWGT with the HP 4192A. The phase should be 0.0 degrees +-.1 degree. If the phase is not correct, repeat the adjustment.

   Each filter will have approximately 0.1dB gain and approximately 0.2dB across both.

The HP 4192A Analyzer has Phase versus Gain measurement capability with accuracy of <=0.01 degrees which is required for the P/AR filter adjustment.

5-28. US EDD Hi-Q Filters (83 1/3 Hz Modulation)

Receiver: Level/Freq, 600
Transmitter: 1004 Hz, 0 dBm, 600 ohms

1. Put the A7 board on an extender. On A7, move jumper JU3 (83 1/3 Hz CAL) to the left and move jumper JU1 (83 1/3 Hz BPF)to the left.

2. This adjustment uses an HP 3575A Phase/Gain meter. First connect channel A to the middle pin of JU3 and connect channel B to the left pin of JU3. The phase should be 0.0 degrees +-.1. This checks the meter calibration.

3. Connect Channel A of the phase gain meter to the middle pin of JU3. Connect Channel B to TP1.

4. Adjust A7R103 (HI-Q 1) for 0.0 degrees +-.1.

5. Move Channel A to TP2 and adjust A7R102 (HI-Q 2) for 0.0 degrees +-.1.

6. Move Channel B to the middle pin of JU3 to verify that the filter reads 0.0 degrees +-.1.

   Note: Go back and compensate each adjustment to get the 0.0 degree result.

7. Return the jumpers to their original positions.

5-29. US EDD AGC

Receiver: Envelope Delay Mode
Transmitter: 1804 Hz, 0 dBm, 600 ohms

1. Loop the transmitter output to the receiver input.

2. Monitor A7 TP2 with a DVM and adjust A7R203 (AGC Gain) for 2.19 Vrms +- 50 mV.

3. Change the transmit level to -13 dBm and verify that TP2 still reads 2.19 Vrms +-50 mV. Then go back to 0 dBm and again verify the TP2 level.

5-30. Phase Hit Balance

Run Mode 21, Path 1

1. Connect an oscilloscope to A9 TP2.
2. Coarse adjustment: Adjust A9R28 (Phase Hit Balance) for a 50% duty cycle square wave.
3. Fine adjustment: Adjust A9R28 until Mode 21 Path 1 displays a zero.
4. Mode 21 paths 2 and 3 should read 8 or 9.

5-31. NLD 1990 Hz Detector

1. Monitor the square wave at A3 TP1 with a frequency counter.
2. Adjust A3R9 (1990 Hz adjust) for 1990 Hz +- 1 Hz.

5-32. NLD 520 Hz Bandpass Filter

Receiver: Level/Freq, 600 ohms
Transmitter: 600 ohms

1. Loop the transmitter output to the receiver input.
2. Monitor the A3 test points listed below with an HP-3575A-Phase/Gain-meter. Set the transmitter frequency and level. Adjust the appropriate adjustment as necessary.

Connect		Transmit			
Channel A	Channel B	Freq	Level	Adjust	For
TP 2	TP 3	562 Hz	-10 dBm	A3R10 (BPF1)	90 degrees
TP 3	TP 4	492 Hz	-10 dBm	A3R12 (BPF2)	90 degrees
TP 4	TP 5	555 Hz	-10 dBm	A3R22 (BPF3)	90 degrees
TP 5	TP 6	480 Hz	0 dBm	A3R32 (BPF4)	0 degrees

The filter shape can be seen by using an HP 3585A Spectrum Analyzer and the setup described below.

1. Set up the HP 3585A to view frequencies from 200 Hz to 800 Hz.
2. Connect the HP 4945A transmitter output to the high impedance input on the HP 3835A.
3. Connect the HP 3585A's tracking generator output to the HP 4945A receiver input.

4. Connect the signal probe to A3 TP1 and view the filter response curve on the HP 3585A. The ideal filter shape is shown below. The actual frequency points may be +-2 Hz.

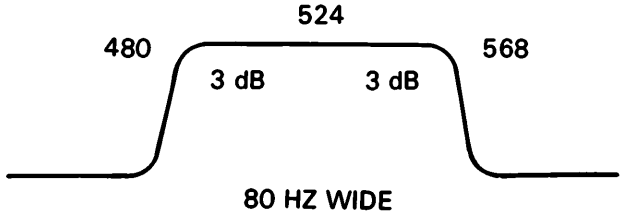

5-33. Two-Wire Return Loss

Test Select: ERL, Two Wire, 900 ohm
Transmitter: 1000 Hz, -2.0 dB, 900 ohm
Receiver: 900 ohm

1. Put the A17 board on an extender.

2. Connect an HP 3403C True rms voltmeter to A4TP5. Use A6TP7 for the ground connection.

Note: Other T-RMS conversion meters can give different readings.

3. Adjust A17R98 for 0.758 V trms at A4TP5. The ERL reading on the HP 4945A should be 0.0 dB to -0.1 dB.

5-34. Real Time Clock Oscillator

1. Set test switch S406 on All to the following position.

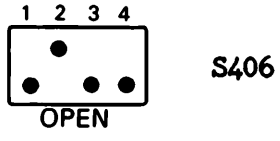

S406

2. Set up the frequency counter (HP5315) as follows:

Channel A, period measurement
Trigger - maximum sensitivity
AC trigger
Use 100 kHz filter
Attenuation - X1

The counter's 7-digit per second resolution feature is needed in this adjustment.

3. Connect the counter to A12 TP103-8 (labeled 1 Hz).

4. The reading should be 1.0000000 seconds, +-.0000199 seconds. Adjust A12C34 if necessary.

5-35. DISPLAY ADJUSTMENTS

First see that the power supplies are within specifications. The values of +5NSY, +12V and -12V will affect the CRT adjustments. Adjust the supplies if necessary (See Power Supply Adjustments).

Magnetic fields from soldering irons, transformers, instruments and other such devices may cause display distortion. Removing these electromagnetic fields should eliminate unwanted distortions. If this is a new CRT/Yoke assembly, be sure to do the phosphor packing before continuing (See CRT Installation in Section 6).

The CRT adjustments should be made in the order given below.

1. Turn the instrument on, and select the TEST PATTERN softkey in the CALIBRATE/SELF-CHECK menu. Display the pattern that has the E characters in the inverse video field.

2. If necessary, adjust the HORIZ SIZE (A19 R20) and VERT SIZE (A19 R65) so the entire video display pattern is visible.

3. The displayed video border should be level and parallel with the display bezel. If not, perform the Yoke Adjustment below.

4. Adjust the LINEARITY (A69 R19) control so the top and bottom video softkey characters are the same size.

5. Adjust the VERT SIZE (A19 R65) and VERT POSITION (A19 R48) so the video border is just within the top and bottom edges of the display bezel. Also check to see that the video softkeys are aligned with the front panel softkeys when viewing the display.

6. Adjust the HORZ SIZE (A19 R20) and HORZ POSITION (A19 R27) so the video border is just within the left and right edges of the display bezel.

7. Using a photometer, adjust the brightness as follows:

   A. Remove the display bezel by releasing the latches on the underside of the bezel.

   B. Carefully remove the glass contrast faceplate, and thoroughly clean both sides of the faceplate and the CRT face with a mild glass cleaner and a lint-free cloth.

   C. Replace the faceplate, coated side out, and snap the bezel back in place by first hooking the top latches then the botton latches.

D. Adjust the INTENSITY (A19 R43) for the desired intensity OR use a photometer and set the intensity for a luminance of 60 +/-2 Candela per square meter (17.5 +/-0.6 Foot-lambert).

Note: The photometer method should be done when there is more than two HP 4945A's together in a system.

8. Adjust the FOCUS (A19 R30) so that the dots in the video are sharp and clear (minimum dot size).

5-36. Yoke Adjustment

WARNING

LETHAL VOLTAGES EXIST ON THE POWER SUPPLIES AND IN THE AREA AROUND THE CRT. USE EXTREME CAUTION WHEN SERVICING. ALL ADJUSTMENTS SHOULD BE PERFORMED ONLY BY QUALIFIED PERSONNEL.

1. Set the HP 4945A power switch to "off" and remove the ac power cord.

2. Swing out the power supply on the left side of the instrument to access the CRT yoke. (Refer to Section 6-7, Power Supply Removal).

3. Loosen the yoke clamp.

4. Connect the power cord and set the power switch to ON.

5. Display the test pattern (from the Calibrate/Self Test menu).

6. Rotate the yoke until the display is level.

7. Make sure the yoke is positioned forward against the CRT bell and retighten the yoke clamp.

SECTION VI
REPLACEABLE PARTS

6-1. INTRODUCTION

This section contains information for ordering parts and assembly removal procedures. Table 6-1 lists reference designators and abbreviations used in the parts list and throughout the manual. Table 6-2 lists all replaceable parts in reference designator order. Table 6-3 gives the names and addresses that correspond to the manufacturer's code numbers. The figures in this chapter are used to identify the mechanical and hardware part you need. Component locators in Section 8 can be used to identify a part on a PC board. After identifying the part in one of the figures, look up the reference designator in the parts list for ordering information.

6-2. EXCHANGE ASSEMBLIES

Instruments with serial prefixes 2435A or greater have power supplies with part numbers 04945-60067 (A28) and 04945-60068 (A29).

Instruments with serial prefixes less than 2435A have power supplies that were on the Blue Stripe Exchange program. These supplies should be replaced on failure with the new power supplies listed above.

6-3. ABBREVIATIONS

Table 6-1 lists the reference designators and abbreviations used in the parts list, the schematics and throughout the manual. The abbreviations in the parts list are always capital letters. In other parts of the manual abbreviations may be used with both lower and upper case letters.

6-4. ORDERING INFORMATION

To order a part on the material lists, quote the Hewlett-Packard part number, indicate the quantity desired, and address the order to the nearest Hewlett-Packard Sales/Service Office.

To order a part not on the material lists, include the instrument model number, instrument serial number, a description of the part (including its function), and the number of parts required. Address the order to the nearest Hewlett-Packard Sales/Service Office.

6-5. DIRECT MAIL ORDER SYSTEM

Within the USA, Hewlett-Packard can supply parts through a direct mail order system. Advantages of using this system are:

a. Direct ordering and shipment from the Hewlett-Packard Parts Center in Mountain View, California.

b. No maximum or minimum on any mail order (there is a minimum order amount for parts ordered through a local Hewlett-Packard office when the orders require billing and invoicing).

c. Prepaid transportation (there is a small handling charge for each order).

d. No invoices.

To provide these advantages, a check or money order must accompany each order. Payment must include handling charge and state tax. Hewlett-Packard is licensed to do business in all 50 states and must collect appropriate state taxes.

Mail order forms and specific ordering information is available through your local Hewlett-Packard office. Addresses and phone numbers are listed at the back of this manual.

6-7. POWER SUPPLY REMOVAL

The following procedures can be used to remove and/or swing out any of the power supply assemblies.

A28/A21.

The A28 supply is on the bottom of the HP 4945A. It connects to the A21 DC Interconnect Assembly (also on bottom of HP 4945A). Both assemblies can be swung out together for troubleshooting, or either can be removed.

A29/20

The A29 supply is on the left side of the HP 4945A. It connects to the A20 AC. Main sqwitching assembly (also on left side of HP 4945A). Both assemblies can be swung out together for troubleshooting, or either can be removed.

Swinging out A21 and A28.

To swing out A21 and A28 for troubleshooting, use the following procedure.

1. Place the HP 4945A on its rear feet and remove the bottom cover. Refer to Figure 6-1.
2. Cut the two cable ties that hold the power switch cable to the A28 sheet metal (See Figure 6-1).
3. Unplug the flat ribbon flex-cables (W5 and W6) from A21. Refer to Figure 6-1.
4. Remove the 5 screws marked B in Figure 6-1.

Both the A21 and A28 assemblies can now be swung out for troubleshooting.

A28 Removal

1. Follow steps 1 and 2 of the "Swinging Out A21 and A28" procedure.
2. Remove the four screws marked "A" in Figure 6-1 that hold the A28 assembly to the chassis.
3. Carefully disconnect the A28 supply from the A21 assembly. Disconnect the cable that plugs into A21 and remove the A28 assembly.
4. When reinstalling, remember to plug in the cable to A21 and install new cable ties for the power switch cable.

A21 Removal

1. Follow the "Swinging Out A21 and A28" procedure.
2. Disconnect the wires from A21 (See Figure 6-2).
   - Disconnect the 4 wire cable that connects to A20.
   - Disconnect the 2 wire cable that connects to A28.
   - Unsolder the following wires:

     Red, orange, black, white/brown, white/blue, white/red, and white/black
3. Remove screw marked C in Figure 6-1. Disconnect the A21 assembly from the A28 assembly.

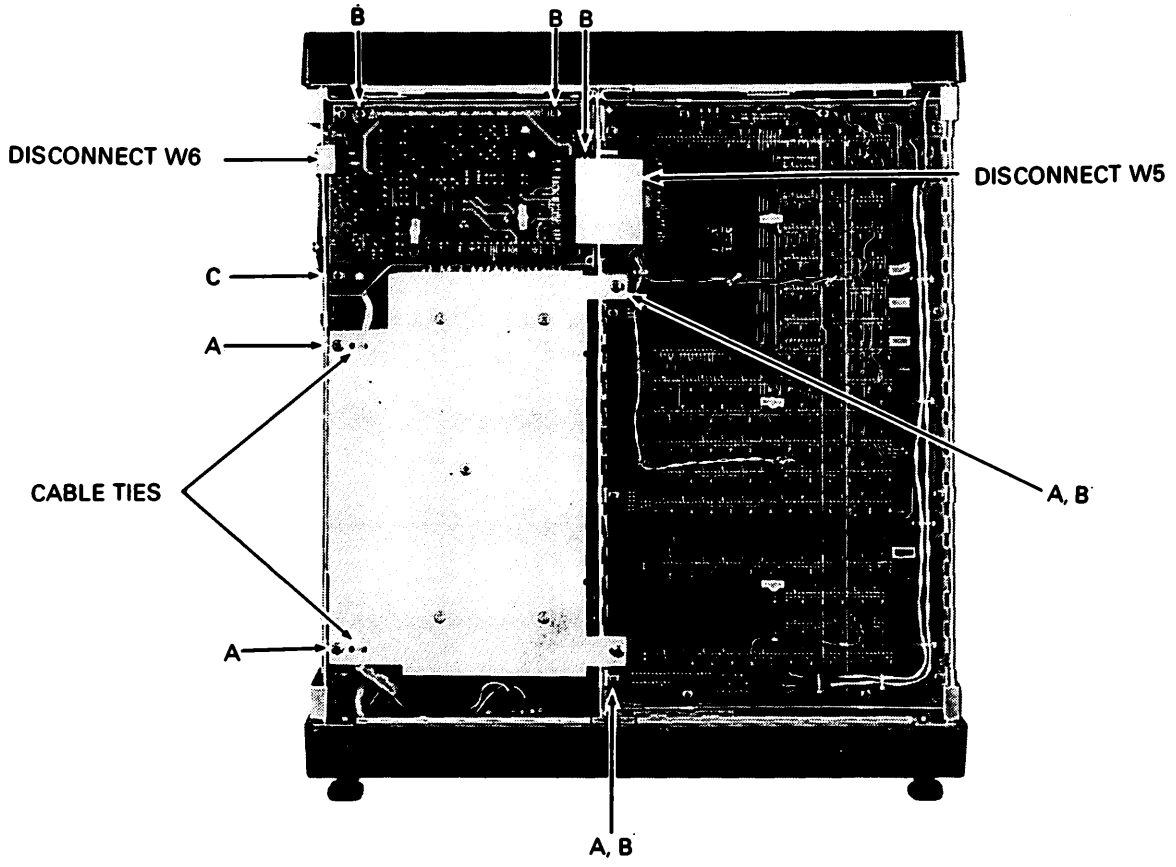

REMOVE SCREWS MARKED B TO SWING OUT A21 AND A28.
REMOVE SCREWS MARKED C AND B TO REMOVE A21.
REMOVE SCREWS MARKED A AND B TO REMOVE A28.

Figure 6-1. A28 and A21 Access Screws

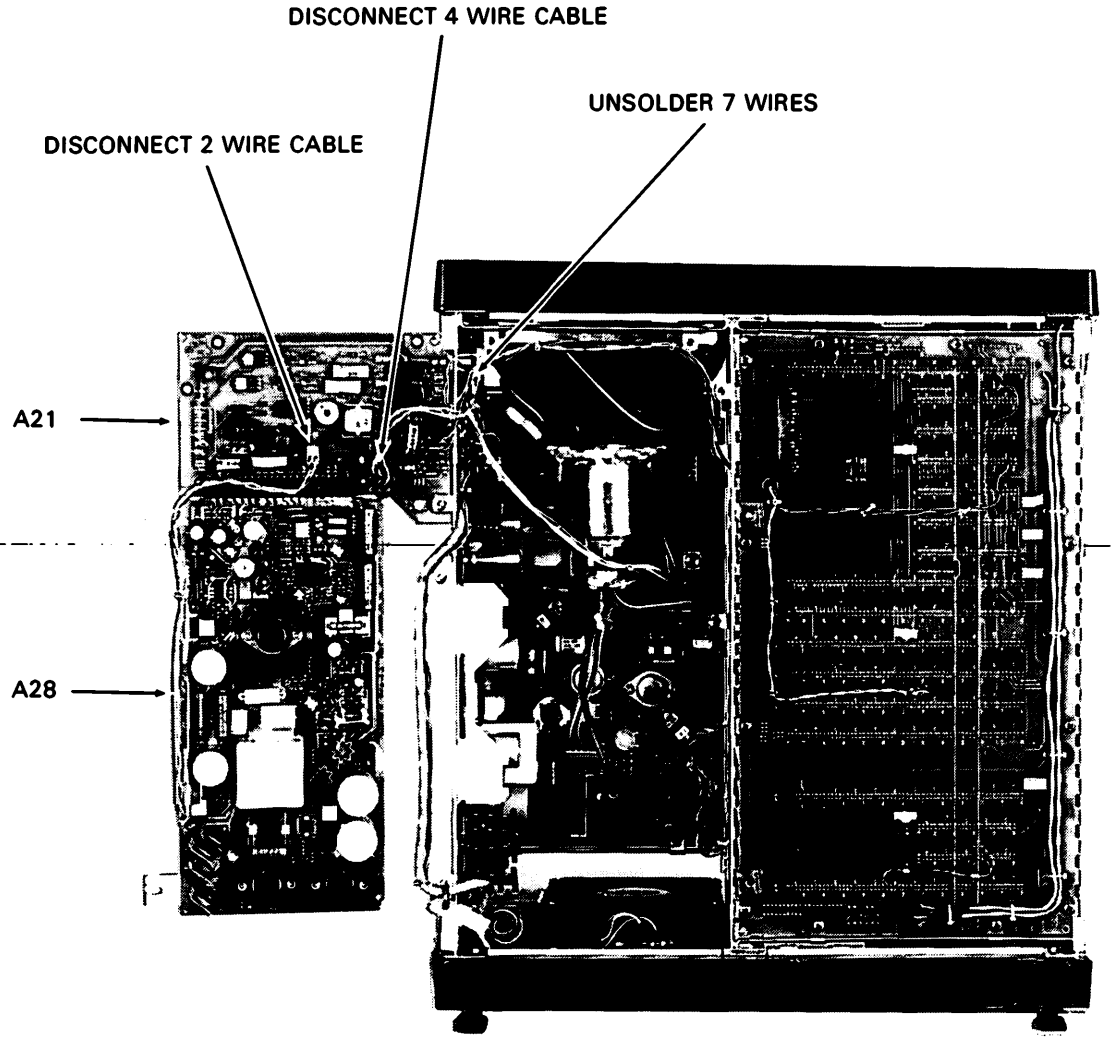

Figure 6-2. A21 Cables

Replacement for page 6-7

Swinging Out A20 and A29

To swing out A20 and A29 for troubleshooting, use the following procedure.

1. Set the HP 4945A on its rear feet and remove the top and bottom covers.

2. Remove the carrying handle and the side rail.

3. Remove screws marked "B" in Figure 6-3.

4. With the HP 4945A power cord unplugged, switch the power switch to the ON position. Carefully pry the line switch extension shaft from the line switch. Use a screw driver and pry on the extension shaft only to avoid damaging the live switch mechanism.

   The A20/29 assemblies can now be swung out for troubleshooting.

A29 Removal

1. Follow steps 1 and 2 of the "Swinging Out A20 and A29" procedure.

2. Remove screws marked "A" in Figure 6-3 that hold the A29 assembly to the chassis.

3. Carefully disconnect the A29 supply from the A20 assembly and remove the A29 supply.

A20 Removal

1. Follow the "Swinging Out A20 and A29" procedure.

2. Remove the W6 flat ribbon flex cable that connects to the A21 assembly (See Figure 6-3).

3. Disconnect the wires on A20 (See Figure 6-3).

   - Unplug the four wire cable to A21.
   - Unplug the four wire cable to A19.
   - Unplug the 2 wire fan cable.
   - Unsolder the white/red and white/black sense lines that go to the A21 board.
   - Unsolder the 4 wires of the power cable from the power switch.

4. Remove the screw marked "C" in Figure 6-3. Disconnect the A20 assembly from the A29 assembly.

5. When reinstalling, check the operation of the power switch on A20.

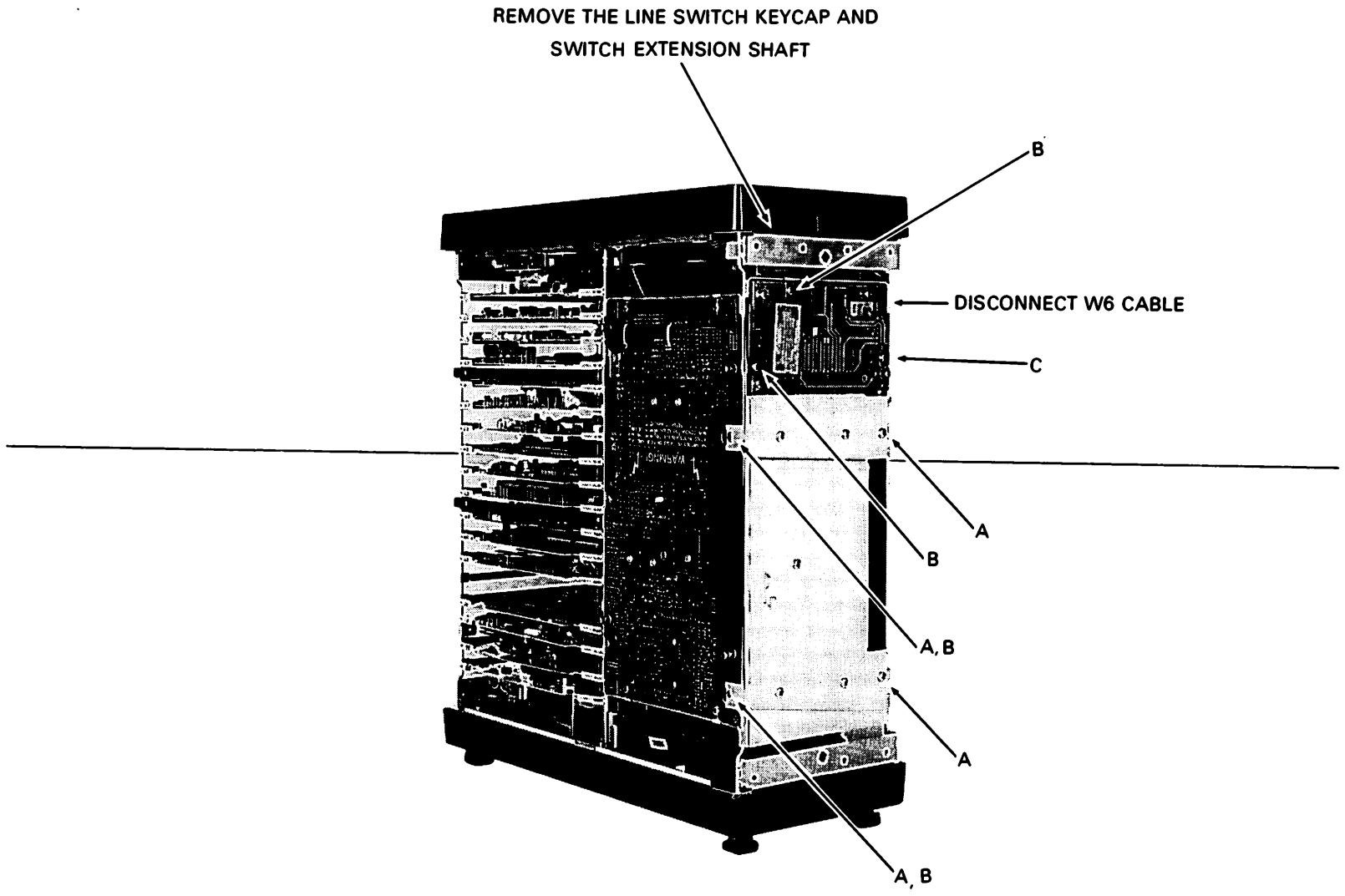

REMOVE SCREWS MARKED B TO SWING OUT A20 AND A29.
REMOVE SCREWS MARKED C AND B TO REMOVE A20.
REMOVE SCREWS MARKED A AND B TO REMOVE A29.

Figure 6-3. A29 and A20 Access Screws

Replacement for page 6-9

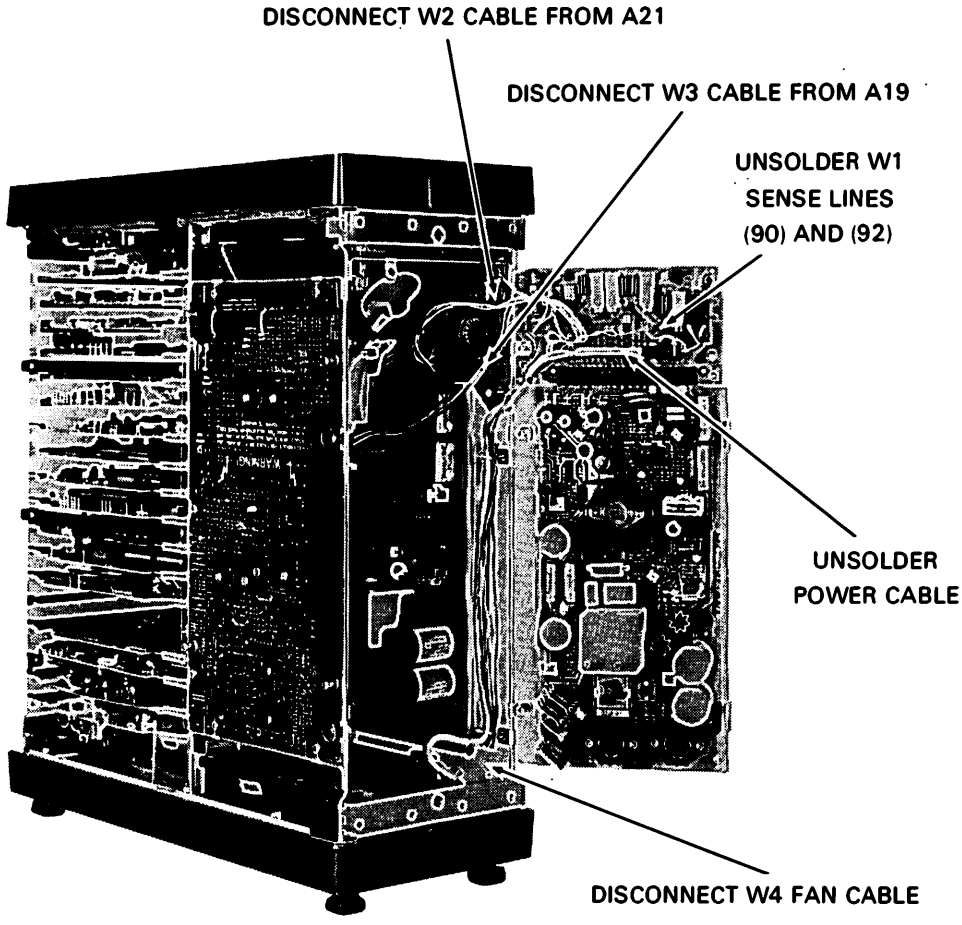

Figure 6-4. A20 Cables

Replacement for page 6-10

Table 6-2. Replaceable Parts (Cont'd)

Reference Designator	HP Part Number	C D	Qty	Description	Mfr Code	Mfr Part Number
A28	04945-60067	1	1	POWER SUPPLY 15V	28480	04945-60067
A28C1	0160-4439	7	2	CAPACITOR-FXD 4700PF ±20% 250VAC(RMS)	05917	PME271Y447
A28C2	0160-4439	7		CAPACITOR-FXD 4700PF ±20% 250VAC(RMS)	05917	PME271Y447
A28C3	0160-5538	9	2	CAPACITOR-FXD 1.5UF ±10% 160VAC(RMS)	28480	0160-5538
A28C5	0180-3047	3	2	CAPACITOR-FXD 130UF +50-10% 200VDC AL	28480	0180-3047
A28C6	0180-3047	3		CAPACITOR-FXD 130UF +50-10% 200VDC AL	28480	0180-3047
A28C7	0160-4065	5	1	CAPACITOR-FXD .1UF ±20% 250VAC(RMS)	28480	0160-4065
A28C8	0160-5538	9		CAPACITOR-FXD 1.5UF ±10% 160VAC(RMS)	28480	0160-5538
A28C9	0180-3055	3	3	CAPACITOR-FXD 100UF +50-10% 63VDC AL	28480	0180-3055
A28C10	0160-4571	8	8	CAPACITOR-FXD .1UF +80-20% 50VDC CER	28480	0160-4571
A28C11	0160-4571	8		CAPACITOR-FXD .1UF +80-20% 50VDC CER	28480	0160-4571
A28C12	0160-2496	2	1	CAPACITOR-FXD 470PF ±10% 1KVDC CER	28480	0160-2496
A28C13	0160-3457	7	2	CAPACITOR-FXD 2000PF ±10% 250VDC CER	09538	805-250VX5R202K
A28C15	0160-4833	5	1	CAPACITOR-FXD .022UF ±10% 100VDC CER	28480	0160-4833
A28C17	0180-2781	0	1	CAPACITOR-FXD 39UF ±10% 10VDC TA	28480	0180-2781
A28C18	0160-5166	9	1	CAPACITOR-FXD .015UF ±20% 100VDC CER	28480	0160-5166
A28C20	0160-5119	2	1	CAPACITOR-FXD .33UF ±10% 100VDC POLYP	28480	0160-5119
A28C21	0160-4571	8		CAPACITOR-FXD .1UF +80-20% 50VDC CER	28480	0160-4571
A28C22	0180-3057	5	2	CAPACITOR-FXD 820UF +100-10% 6.3VDC AL	28480	0180-3057
A28C23	0180-3057	5		CAPACITOR-FXD 820UF +100-10% 6.3VDC AL	28480	0180-3057
A28C24	0160-0127	2	2	CAPACITOR-FXD 1UF ±20% 25VDC CER	28480	0160-0127
A28C25	0150-0052	1	2	CAPACITOR-FXD .05UF ±20% 400VDC CER	09538	847-005Z5U503M
A28C26	0180-0405	1	2	CAPACITOR-FXD 1.8UF ±10% 20VDC TA	56289	150D185X9020A2
A28C28	0180-0405	1		CAPACITOR-FXD 1.8UF ±10% 20VDC TA	56289	150D185X9020A2
A28C29	0160-0127	2		CAPACITOR-FXD 1UF ±20% 25VDC CER	28480	0160-0127
A28C30	0160-5126	1	1	CAPACITOR-FXD .033UF ±200VDC POLYP	28480	0160-5126
A28C34	0180-3054	2	2	CAPACITOR-FXD 220UF +75-10% 25VDC AL	28480	0180-3054
A28C36	0180-3055	3		CAPACITOR-FXD 100UF +50-10% 63VDC AL	28480	0180-3055
A28C37	0160-4571	8		CAPACITOR-FXD .1UF +80-20% 50VDC CER	28480	0160-4571
A28C38	0160-4571	8		CAPACITOR-FXD .1UF +80-20% 50VDC CER	28480	0160-4571
A28C39	0160-4571	8		CAPACITOR-FXD .1UF +80-20% 50VDC CER	28480	0160-4571
A28C40	0180-3054	2		CAPACITOR-FXD 220UF +75-10% 25VDC AL	28480	0180-3054
A28C42	0160-4571	8		CAPACITOR-FXD .1UF +80-20% 50VDC CER	28480	0160-4571
A28C43	0180-3055	3		CAPACITOR-FXD 100UF +50-10% 63VDC AL	28480	0180-3055
A28C44	0160-4571	8		CAPACITOR-FXD .1UF +80-20% 50VDC CER	28480	0160-4571
A28C45	0150-0052	2	2	CAPACITOR-FXD .05UF ±20% 400VDC CER	09538	847-005Z5U503M
A28C47	0160-4741	4	1	CAPACITOR-FXD .22UF ±10% 50VDC CER	28480	0160-4741
A28C49	0160-3457	7		CAPACITOR-FXD 2000PF ±10% 250VDC CER	09538	805-250VX5R202K
A28CR1	1901-0050	3	14	DIODE-SWITCHING 80V 200MA 2NS DO-35	28480	1901-0050
A28CR2	1901-0050	3		DIODE-SWITCHING 80V 200MA 2NS DO-35	28480	1901-0050
A28CR3	1901-0050	3		DIODE-SWITCHING 80V 200MA 2NS DO-35	28480	1901-0050
A28CR4	1901-0050	3		DIODE-SWITCHING 80V 200MA 2NS DO-35	28480	1901-0050
A2CR5	1901-0028	5	3	DIODE-PWR RECT 400V 750MA DO-29	28480	1901-0028
A28CR6	1901-0050	3		DIODE-SWITCHING 80V 200MA 2NS DO-35	28480	1901-0050
A28CR7	1901-0050	3		DIODE-SWITCHING 80V 200MA 2NS DO-35	28480	1901-0050
A28CR8	1901-0050	3		DIODE-SWITCHING 80V 200MA 2NS DO-35	28480	1901-0050
A28CR9	1901-0050	3		DIODE-SWITCHING 80V 200MA 2NS DO-35	28480	1901-0050
A28CR11	04945-62610	4	4	ASSY-DIODE & H/S	28480	04945-62610
A28CR12	04945-62610	4		ASSY-DIODE & H/S	28480	04945-62610
A28CR13	04945-62610	4		ASSY-DIODE & H/S	28480	04945-62610
A28CR14	04945-62610	4		ASSY-DIODE & H/S	28480	04945-62610
A2CR15	1901-0028	5		DIODE-PWR RECT 400V 750MA DO-29	28480	1901-0028
A2CR16	1901-0028	5		DIODE-PWR RECT 400V 750MA DO-29	28480	1901-0028
A28CR17	1901-0050	3		DIODE-SWITCHING 80V 200MA 2NS DO-35	28480	1901-0050
A28CR18	1901-0050	3		DIODE-SWITCHING 80V 200MA 2NS DO-35	28480	1901-0050
A28CR81	1884-0258	5	1	THYRISTOR-DIAC TRIG IP PULSE=2A MAX; V	28480	1884-0258
A28CR82	1901-0050	3		DIODE-SWITCHING 80V 200MA 2NS DO-35	28480	1901-0050
A28CR83	1901-0050	3		DIODE-SWITCHING 80V 200MA 2NS DO-35	28480	1901-0050
A28CR84	1901-0050	3		DIODE-SWITCHING 80V 200MA 2NS DO-35	28480	1901-0050
A28CR91	1901-0050	3		DIODE-SWITCHING 80V 200MA 2NS DO-35	28480	1901-0050
A28F1	2110-0683	2	1	FUSE .75A 125V NTD .3×.103UL	04703	255.750
	2110-0554	6	2	FUSE HOLDER-BIPIN SKT 5A 125V	040703	281005
A28F91	2110-0671	8	1	FUSE .125A 125V NTD .28×.096	04073	255.125
	2110-0554	6		FUSEHOLDER-BIPIN SKT 5A 125V	040703	281005
A28F92	2110-0684	3	2	FUSE 2A 125V NTD .3×.103 UL	04073	255002
A28F93	2110-0684	3		FUSE 2A 125V NTD .3×.103 UL	04073	255002
A28J1	1251-4670	2	2	CONN-POST TYPE .100-PIN-SPGG 3-CONT	03206	65500-103
A28J2	1251-4670	2		CONN-POST TYPE .100-PIN-SPGG 3-CONT	03206	65500-103
A28J3	1251-6857	1	5	CONN-POST TYPE .100-PIN-SPCG 2-CONT	01380	87220-2
A28J4	1251-6857	1		CONN-POST TYPE .100-PIN-SPCG 2-CONT	01380	87220-2
A28J5	1251-6857	1		CONN-POST TYPE .100-PIN-SPCG 2-CONT	01380	87220-2
A28J8	1251-6857	1		CONN-POST TYPE .100-PIN-SPCG 2-CONT	01380	87220-2
A28J9	1251-6857	1		CONN-POST TYPE .100-PIN-SPCG 2-CONT	01380	87220-2
A28JU1	1258-0141	8	7	JUMPER-REMOVEABLE FOR .025 IN SQ PINS	28480	1258-0141
A28JU2	1258-0141	8		JUMPER-REMOVEABLE FOR .025 IN SQ PINS	28480	1258-0141
A28JU3	1258-0141	8		JUMPER-REMOVEABLE FOR .025 IN SQ PINS	28480	1258-0141

Table 6-2. Replaceable Parts (Cont'd)

Reference Designator	HP Part Number	C D	Qty	Description	Mfr Code	Mfr Part Number
A28JU4	1258-0141	8		JUMPER-REMOVEABLE FOR .025 IN SQ PINS	28480	1258-0141
A28JU5	1258-0141	8		JUMPER-REMOVEABLE FOR .025 IN SQ PINS	28480	1258-0141
A28JU8	1258-0141	8		JUMPER-REMOVEABLE FOR .025 IN SQ PINS	28480	1258-0141
A28JU9	1258-0141	8		JUMPER-REMOVEABLE FOR .025 IN SQ PINS	28480	1258-0141
A28L1	04945-80038	8	1	CHOKE 230UH	28480	04945-80038
A28L2	9140-0137	1	1	INDUCTOR RF-CH-MLD 1MH 5% .2DX.45LG Q=60	28480	9140-0137
A28L3	04945-80041	3	1	REACTOR-CONTROL	28480	04945-80041
A28L4	04945-80039	9	1	INDUCTOR 8UH	28480	04945-80039
	1480-0529	7	1	PIN-ESC .071-IN-DIA 1.42-IN-LG STL	28480	1480-0529
A28L5	04945-80040	2	1	COIL 2UH 10A	28480	04945-80040
	9170-1207	1	1	ADJUSTING SCREW OD: .244IN; L .875IN	28480	9170-1207
A28L6	9100-2515	9	2	INDUCTOR 100UH 10% .5DX1.25LG Q=26	28480	9100-2515
A28L7	9100-2515	9		INDUCTOR 100UH 10% .5X1.25LG Q=26	28480	9100-2515
A28Q1	1855-0485	9	2	TRANSISTOR MOSFET N-CHAN TO-3	03038	STM3001
	1205-0431	8	2	HEAT SINK TO-3-CS	28480	1205-0431
A28Q2	1855-0485	9		TRANSISTOR MOSFET N-CHAN TO-3	03038	STM3001
	1205-0431	8		HEAT SINK TO-3-CS	28480	1205-0431
A28Q3	04945-62611	5	1	ASSY-XSTR & H/S	28480	04945-62611
A28Q4	1854-0687	1	1	TRANSISTOR NPN 2N3725A SI TO-39 PD=5W	01295	2N3725A
	1205-0391	9	2	HEAT SINK SGL TO-5/TO-39-CS	28480	1205-0391
	1200-0181	5	2	INSULATOR-XSTR NYLON	28480	1200-0181
A28Q5	1853-0489	9	1	TRANSISTOR PNP TO-39 PD=1W FT=100MHZ	04713	MM4032
	1200-0181	5		INSULATOR-XSTR NYLON	28480	1200-0181
	1205-0391	9		HEAT SINK SGL TO-5/TO-39-CS	28480	1205-0391
A28Q7	1854-0477	7	2	TRANSISTOR NPN 2N2222A SI TO-18 PD=500MW	04713	2N2222A
A28Q8	1854-0477	7	2	TRANSISTOR NPN 2N2222A SI TO-18 PD=500MW	04713	2N2222A
A28Q9	1884-0201	8	1	THYRISTOR-SCR TO-92 VRRM=60	04713	2N5061
A28Q10	1854-0087	5	3	TRANSISTOR NPN SI PD=360MW FT=75MHZ	28480	1854-0087
A28Q12	1854-0087	5		TRANSISTOR NPN SI PD=360MW FT=75MHZ	28480	1854-0087
A28Q80	1853-0281	9	1	TRANSISTOR PNP 2N2907A SI TO-18 PD=400MW	04713	2N2907A
A28Q81	1854-0087	5		TRANSISTOR NPN SI PD=360MW FT=75MHZ	28480	1854-0087
A28R1	0686-1045	9	2	RESISTOR 100K 5% .5W CC TC=0+882	01121	EB1045
A28R2	0686-1045	9		RESISTOR 100K 5% .5W CC TC=0+882	01121	EB1045
A28R3	0683-1515	2	2	RESISTOR 150 5% .25W FC TC=-400/+600	01121	CB1515
A28R4	0683-1515	2		RESISTOR 150 5% .25W FC TC=-400/+600	01121	CB1515
A28R5	0837-0252	9	1	THERMISTOR-SURGE-PTCTR 200HM AT 25DEG	02734	SG230
A28R6	0811-1063	8	2	RESISTOR 47 10% 1W PW TC=0±150	28480	0811-1063
A28R7	0811-1063	8		RESISTOR 47 10% 1W PW TC=0±150	28480	0811-1063
A28R10	0757-0405	4	1	RESISTOR 162 1% .125W FTC=0±100	02995	5033R
A28R12	2100-0568	1	1	RESISTOR-TRMR 100 10% C-TOP-ADJ 1-TRN	04568	72PR100-102B
A28R13	0698-4037	0	2	RESISTOR 46.4 1% .125W F TC=0±100	02995	5033R
A28R14	0757-0462	3	1	RESISTOR 75K 1% .125W F TC=0±100	02995	5033R
A28R17	0757-0399	5	1	RESISTOR 82.5 1% .125W FTC=0±100	02995	5033R
A28R18	0757-0407	6	1	RESISTOR 200 1% .125W FTC=0±100	02995	5033R
A28R20	0689-1005	7	1	RESISTOR 10 5% 1W CC TC=0+412	01121	GB1005
A28R21	0811-1059	2	1	RESISTOR 15 5% 5W PW TC=0±400	28480	0811-1059
A28R22	0757-0470	3	2	RESISTOR 162K 1% .125W F TC=0±100	24546	C4-1/8-TO-1623-F
A28R23	0683-0335	2	2	RESISTOR 3.3 5% .25W FC TC=-400/+500	01121	CB33G5
A28R24	0757-0397	3	2	RESISTOR 68.1 1% .125W F TC=0±100	02995	5033R
A28R25	0757-0418	9	1	RESISTOR 619 1% .125W F TC=0±100	02995	5033R
A28R26	0698-0082	7	1	RESISTOR 464 1% .125W F TC=0±100	02995	5033R
A28R27	0757-0411	2	3	RESISTOR 332 1% .125W F TC=0±100	02995	5033R
A28R28	0698-4037	0		RESISTOR 46.4 1% .125W F TC=0±100	02995	5033R
A28R29	0757-0417	8	1	RESISTOR 562 1% .125W F TC=0±100	02995	5033R
A28R30	0757-0413	4	2	RESISTOR 392 1% .125W F TC=0±100	24546	C4-1/8-TO-392R-F
A28R31	0757-0466	7	1	RESISTOR 110K 1% .125W F TC=0±100	24546	C4-1/8-TO-1103-F
A28R32	0757-0401	0	4	RESISTOR 100 1% .125W F TC=0±100	02995	5033R
A28R33	0757-0290	5	1	RESISTOR 6.19K 1% .125W F TC=0±100	19701	MF4C1/8-TO-6191-F
A28R34	0698-5808	5	2	RESISTOR 4K 1% .125W F TC=0±100	05524	CMF-55-1, T-1
A28R35	0757-0435	0	1	RESISTOR 3.92K 1% .125W F TC=0±100	24546	C4-1/8-TO-3921-F
A28R36	0757-0397	3		RESISTOR 68.1 1% .125W F TC=0±100	02995	5033R
A28R37	2100-3965	8	1	RESISTOR-TRMR 5K 20% C TOP-ADJ 1-TRN	01007	90H5022
A28R38	0757-0438	3	1	RESISTOR 5.11K 1% .125W F TC=0±100	24546	C4-1/8-TO-5111-F
A28R39	0757-0273	4	1	RESISTOR 3.01K 1% .125W F TC=0±100	24546	C4-1/8-TO-3011-F
A28R40	0757-0384	7	1	RESISTOR 20.0 1% .125W FTC=0±100	02995	5033R
A28R41	0698-5808	5		RESISTOR 4K 1% .125W FTC=0±100	05524	CMF-55-1, T-1
A28R42	0757-0409	8	1	RESISTOR 274 1% .125W FTC=0±100	02995	5033R
A28R43	0757-0470	3		RESISTOR 162K 1% .125W F TC=0±100	24546	C4-1/8-TO-1623-F
A28R45	0757-0270	1	1	RESISTOR 249K 1% .125W F TC=0±100	24546	C4-1/8-TO-2493-F
A28R46	0757-0427	0	2	RESISTOR 1.5K 1% .125W F TC=0±100	02995	5033R
A28R47	0757-0401	0		RESISTOR 100 1% .125W F TC=0±100	02995	5033R

Table 6-2. Replaceable Parts (Cont'd)

Reference Designator	HP Part Number	C D	Qty	Description	Mfr Code	Mfr Part Number
A28R48	0757-0411	2		RESISTOR 332 1% .125W F TC=0±100	02995	5033R
A28R49	0757-0401	0		RESISTOR 100 1% .125W F TC=0±100	02995	5033R
A28R54	0683-0335	2		RESISTOR 3.3 5% .25W FC TC=-400/+500	01121	CB33G5
A28R55	0757-0403	2	2	RESISTOR 121 1% .125W F TC=0±100	24546	C4-1/8-TO-121R-F
A28R56	2100-4079	7	2	RESISTOR-TRMR 500 20% C TOP-ADJ 1-TRN	03744	3359P-1-501
A28R57	0757-0411	2		RESISTOR 332 1% .125W F TC=0±100	02995	5033R
A28R58	0757-0294	9	2	RESISTOR 17.8 1% .125W F TC=0±100	02995	5033R
A28R59	2100-4079	7		RESISTOR-TRMR 500 20% C TOP ADJ 1-TRN	03744	3559P-1-501
A28R60	0757-0403	2		RESISTOR 121 1% .125W F TC=0±100	24546	C4-1/8-TO-121R-F
A28R61	0757-0427	0		RESISTOR 1.5K 1% .125W F TC=0±100	02995	5033R
A28R62	0757-0294	9		RESISTOR 17.8 1% .125W F TC=0±100	02995	5033R
A2R80	0757-0200	7	1	RESISTOR 5.62K 1% .125W F TC=0±100	24546	C4-1/8-TO-5621-F
A28R81	0757-0283	6	1	RESISTOR 2K 1% .125W F TC=0±100	02995	5033R
A28R82	0757-0447	4	1	RESISTOR 16.2K 1% .125W F TC=0±100	24546	C4-1/8-TO-1622-F
A28R83	0757-0413	4		RESISTOR 392 1% .125W F TC=0±100	24546	C4-1/8-TO-392R-F
A28R84	0757-0124	4	1	RESISTOR 39.2K 1% .125W F TC=0±100	02995	5033R
A28R85	0757-0401	0		RESISTOR 100 1% .125W F TC=0±100	02995	5033R
A28R86	0757-0424	7	2	RESISTOR 1.1K 1% .125W	02995	5033R
A28R87	0757-0424	7		RESISTOR 1.1K 1% .125W	02995	5033R
A28T1	04945-80037	7	1	XFMR-DRIVE	28480	04945-80037
A28T2	04945-80034	4	1	XFMR 5V, 19V	28480	04945-80034
A28TP1	1251-6947	0	7	CONNECTOR-SGL CONT PIN .025-IN-BASC-SZ SQ	01380	87623-1
A28TP2	1251-6947	0		CONNECTOR-SGL CONT PIN .025-IN-BASC-SZ SQ	01380	87623-1
A28TP3	1251-6947	0		CONNECTOR-SGL CONT PIN .025-IN-BASC-SZ SQ	01380	87623-1
A28TP4	1251-6947	0		CONNECTOR-SGL CONT PIN .025-IN-BASC-SZ SQ	01380	87623-1
A28TP5	1251-6947	0		CONNECTOR-SGL CONT PIN .025-IN-BASC-SZ SQ	01380	87623-1
A28TP6	1251-6947	0		CONNECTOR-SGL CONT PIN .025-IN-BASC-SZ SQ	01380	87623-1
A28TP7	1251-6947	0		CONNECTOR-SGL CONT PIN .025-IN-BASC-SZ SQ	01380	87623-1
A28TS1	3103-0112	8	1	SWITCH-THERM FXD 80C OPN-ON-RISE	06784	TS80B
A28U1	1906-0237	8	2	DIODE-FW BRDG 600V 1A	28480	1906-0237
A28U2	1906-0237	8		DIODE-FW BRDG 600V 1A	28480	1906-0237
A28U3	1906-0238	9	1	DIODE-45V 30A	01691	SD2416
	1205-0256	5	1	HEATSINK-TO-3-CS	02123	690-3-B
A28U4	1826-0161	7	1	IC OP AMP GP QUAD 14-DIP-P PKG	04713	MLM324P
A28U5	1826-0643	0	1	IC V RGLTR-V-REF-ADJ 3/30V TO-92 PKG	28480	1826-0643
A28U6	1826-0393	7	1	IC V RGLTR TO-220	27014	LM317T
	0340-0949	8	2	INSULATOR-XSTR THRM CNDCT	02923	60-11-5791-1674
	0590-0076	1	2	NUT-HEX-PLSTC LKG 4-40-THD .143-IN-THK	04559	21NM-40
	2190-0416	7	2	WASHER-FL-MTLC NO.4 .125-IN-ID	28480	2190-0416
	2200-0143	0	2	SCREW-MACH 4-40 .375-IN-LG PAN-HD-POZI	28480	2200-0143
	3050-1021	7	2	WASHER-SHLDR NO.4 .116-IN-ID .215-IN-OD	02608	7721-7PPS
A28U7	1990-0543	6	1	OPTO-ISOLATOR LED-PXSTR IF=150MA-MAX	01295	TIL116
A28U8	1826-0527	9	1	IC 337 V RGLTR TO-220	27014	LM337T
	0340-0949	8		INSULATOR-XSTR THRM CNDCT	02923	60-11-5791-1674
	0590-0076	1		NUT-HEX-PLSTC LKG 4-40-THD .143-IN-THK	04559	21NM-40
	2190-0416	7		WASHER-FL-MTLC NO.4 .125-IN-ID	28480	2190-0416
	2200-0143	0		SCREW-MACH 4-40 .375-IN-LG PAN-HD-POZI	28480	2200-0143
	3050-1021	7		WASHER-SHLDR NO.4 .116-IN-ID .215-IN-OD	02608	7721-7PPS
A28U9	1990-0664	2	1	OPTO-ISOLATOR LED-PXSTR IF=50MA-MAX	24972	CNY 21
A28V91	1970-0091	7	1	TUBE ELECTRON B2-B470 SURGE V PTCTR	06121	B2-B470
	1400-0909	9	1	CLIP CMPNT .312-DIAM VINYL	02201	V-1001
A28VR1	1902-3295	6	1	DIODE-ZNR 33.2V 5% DO-35 PD=.4W	28480	1902-3295
A28VR3	1902-1349	7	1	DIODE-ZNR 5.9V 2% PD=.4W	28480	1902-1349
A28VR4	1902-0779	5	4	DIODE-ZNR 11.8V 5% DO-15 PD=1W TC=+.064%	28480	1902-0779
A28VR5	1902-0779	5		DIODE-ZNR 11.8V 5% DO-15 PD=1W TC=+.064%	28480	1902-0779
A28VR6	1902-0779	5		DIODE-ZNR 11.8V 5% DO-15 PD=1W TC=+.064%	28480	1902-0779
A28VR7	1902-0779	5		DIODE-ZNR 11.8V 5% DO-15 PD=1W TC=+.064%	28480	1902-0779
A28VR9	1902-0080	1	2	DIODE-ZNR 14.7V 2% DO-14 PD=.4W TC=+.08%	28480	1902-0080
A28VR10	1902-3214	9	1	DIODE-ZNR 16.2V 2% DO-35 PD=.4W	28480	1902-3214
A28VR80	1902-0080	1		DIODE-ZNR 14.7V 2% DO-14 PD=.4W TC=+.08%	28480	1902-0080
A28VR81	1902-0182	4	2	DIODE-ZNR 20.5V 5% DO-35 PD=.4W	28480	1902-0182
A28VR82	1902-0182	4		DIODE-ZNR 20.5V 5% DO-35 PD=.4W	28480	1902-0182
A28VR91	1902-0943	5	1	DIODE-ZNR 2.4V 5% DO-35 PD=.4W	28480	1902-0943
A28W8	04945-61618	0	1	200KHZ AC CABLE	28480	04945-61618
	0403-0282	6	4	BUMPER FOOT-ADH MTG 12.7-MM-WD	28480	0403-0282
	1390-0515	0	5	FASTENER-SNAP-IN NUT NUT-EXPANSION; FOR	28480	1390-0515
	0400-0002	2	3	GROMET-RND .188-IN-ID .312-IN-GRV-OD	04604	1656
	1400-0264	9	2	CABLE TIE .75-DIA .095-WD NYL	02160	SSTIM
	0360-0124	3	2	CONNECTOR-SGL CONT. PIN .04-IN-BSC-SZ RND	28480	0360-0124
	0340-1097	9	2	INSULATOR NOMEX-NYL-PPR	28480	0340-1097
	2360-0113	2	5	SCREW-MACH 6-32 .25 PAN-HD-POZZI	28480	2360-0113
	04945-00033	5	1	15V CHASSIS	28480	04945-00033

Table 6-2. Replaceable Parts (Cont'd)

Reference Designator	HP Part Number	C D	Qty	Description	Mfr Code	Mfr Part Number
A29	04945-60068	2	1	POWER SUPPLY 12V	28480	04945-60068
A29C1	0160-4439	7	2	CAPACITOR-FXD 4700 PF 20% 250VAC(RMS)	05917	PME271Y447
A29C2	0160-4439	7		CAPACITOR-FXD 4700 PF 20% 250VAC(RMS)	05917	PME271Y447
A29C3	0160-5538	9	2	CAPACITOR-FXD 1.5UF ±10% 160VAC(RMS)	28480	0160-5538
A29C5	0180-3047	3	2	CAPACITOR-FXD 130UF +50-10% 200VDC AL	28480	0180-3047
A29C6	0180-3047	3		CAPACITOR-FXD 130UF +50-10% 200VDC AL	28480	0180-3047
A29C7	0160-4065	5	1	CAPACITOR-FXD .1UF ±20% 250VAC(RMS)	28480	0160-4065
A29C8	0160-5538	9		CAPACITOR-FXD 1.5UF ±10% 160VAC(RMS)	28480	0160-5538
A29C9	0180-3055	3	3	CAPACITOR-FXD 100UF +50-10% 63VDC AL	28480	0180-3055
A29C10	0160-4571	8	9	CAPACITOR-FXD .1UF +80-20% 50VDC CER	28480	0160-4571
A29C11	0160-4571	8		CAPACITOR-FXD .1UF +80-20% 50VDC CER	28480	0160-4571
A29C12	0160-2496	2	1	CAPACITOR-FXD 470PF ±10% 1KVDC CER	28480	0160-2496
A29C13	0160-3457	7	2	CAPACITOR-FXD 2000PF 10% 250VDC CER	09538	805-250VX5R
A29C15	0160-4833	5	1	CAPACITOR-FXD .022UF ±10% 100VDC CER	28480	0160-4833
A29C17	0180-2781	0	1	CAPACITOR-FXD 39UF ±10% 10VDC TA	28480	0180-2781
A29C18	0160-5166	9	1	CAPACITOR-FXD .015UF ±20% 100VDC CER	28480	0160-5166
A29C20	0160-5119	2	1	CAPACITOR-FXD .33UF ±10% 100VDC POLYP	28480	0160-5119
A29C21	0160-4571	8		CAPACITOR-FXD .1UF +80-20% 50VDC CER	28480	0160-4571
A29C22	0180-3057	5	2	CAPACITOR-FXD 820UF +100-10% 6.3VDC AL	28480	0180-3057
A29C23	0180-3057	5		CAPACITOR-FXD 820UF +100-10% 6.3VDC AL	28480	0180-3057
A29C24	0160-0127	2	2	CAPACITOR-FXD 1UF ±20% 25VDC CER	28480	0160-0127
A29C25	0150-0052	1	2	CAPACITOR-FXD .05UF ±20% 400VDC CER	28480	0150-0052
A29C26	0180-0405	1	2	CAPACITOR-FXD 1.8UF ±10% 20VDC TA	56289	150D185X9020A2
A29C28	0180-0405	1		CAPACITOR-FXD 1.8UF ±10% 20VDC TA	56289	150D185X9020A2
A29C29	0160-0127	2		CAPACITOR-FXD 1UF ±20% 25VDC CER	28480	0160-0127
A29C30	0160-5125	0	1	CAPACITOR-FXD .039UF ±10% 200VDC POLYP	28480	0160-5125
A29C34	0180-3054	2	2	CAPACITOR-FXD 2200UF +75-10% 25VDC AL	28480	0180-3054
A29C36	0180-3055	3		CAPACITOR-FXD 100UF +50-10% 63VDC AL	28480	0180-3055
A29C37	0160-4571	8		CAPACITOR-FXD .1UF +80-20% 50VDC CER	28480	0160-4571
A29C38	0160-4571	8		CAPACITOR-FXD .1UF +80-20% 50VDC CER	28480	0160-4571
A29C39	0160-4571	8		CAPACITOR-FXD .1UF +80-20% 50VDC CER	28480	0160-4571
A29C40	0180-3054	2		CAPACITOR-FXD 2200UF +75-10% 25VDC AL	28480	0180-3054
A29C42	0160-4571	8		CAPACITOR-FXD .1UF +80-20% 50VDC CER	28480	0160-4571
A29C43	0180-3055	3		CAPACITOR-FXD 100UF +50-10% 63VDC AL	28480	0180-3055
A29C44	0160-4571	8		CAPACITOR-FXD .1UF +80-20% 50VDC CER	28480	0160-4571
A29C45	0150-0052	1		CAPACITOR-FXD .05UF ±20% 400VDC CER	28480	0150-0052
A29C46	0160-4571	8		CAPACITOR-FXD .1UF +80-20% 50VDC CER	28480	0160-4571
A29C47	0160-4741	4	1	CAPACITOR-FXD .22UF ±10% 50VDC CER	28480	0160-4741
A29C49	0160-3457	7		CAPACITOR-FXD 2000PF 10% 250VDC CER	09538	805-250VX5R
A29CR1	1901-0050	3	14	DIODE-SWITCHING 80V 200MA 2NS DO-35	28480	1901-0050
A29CR2	1901-0050	3		DIODE-SWITCHING 80V 200MA 2NS DO-35	28480	1901-0050
A29CR3	1901-0050	3		DIODE-SWITCHING 80V 200MA 2NS DO-35	28480	1901-0050
A29CR4	1901-0050	3		DIODE-SWITCHING 80V 200MA 2NS DO-35	28480	1901-0050
A29CR5	1901-0028	5	3	DIODE-PWR RECT 400V 750MA DO-29	28480	1901-0028
A29CR6	1901-0050	3		DIODE-SWITCHING 80V 200MA 2NS DO-35	28480	1901-0050
A29CR7	1901-0050	3		DIODE-SWITCHING 80V 200MA 2NS DO-35	28480	1901-0050
A29CR8	1901-0050	3		DIODE-SWITCHING 80V 200MA 2NS DO-35	28480	1901-0050
A29CR9	1901-0050	3		DIODE-SWITCHING 80V 200MA 2NS DO-35	28480	1901-0050
A29CR11	04945-62610	4	4	ASSY-DIODE & H/S	28480	04945-62610
A29CR12	04945-62610	4		ASSY-DIODE & H/S	28480	04945-62610
A29CR13	04945-62610	4		ASSY-DIODE & H/S	28480	04945-62610
A29CR14	04945-62610	4		ASSY-DIODE & H/S	28480	04945-62610
A29CR15	1901-0028	5		DIODE-PWR RECT 400V 750MA DO-29	28480	1901-0028
A29CR16	1901-0028	5		DIODE-PWR RECT 400V 750MA DO-29	28480	1901-0028
A29CR17	1901-0050	3		DIODE-SWITCHING 80V 200MA 2NS DO-35	28480	1901-0050
A29CR18	1901-0050	3		DIODE-SWITCHING 80V 200MA 2NS DO-35	28480	1901-0050
A29CR81	1884-0258	5	1	THYRISTOR-DIAC TRIG IP PULSE=2A MAX; V	28480	1884-0258
A29CR82	1901-0050	3		DIODE-SWITCHING 80V 200MA 2NS DO-35	28480	1901-0050
A29CR83	1901-0050	3		DIODE-SWITCHING 80V 200MA 2NS DO-35	28480	1901-0050
A29CR84	1901-0050	3		DIODE-SWITCHING 80V 200MA 2NS DO-35	28480	1901-0050
A29CR91	1901-0050	3		DIODE-SWITCHING 80V 200MA 2NS DO-35	28480	1901-0050
A29F1	2110-0683	2	2	FUSE .75A 125V NTD .3×.103UL	04703	255.750
	2110-0554	6	3	FUSEHOLDER-BIPIN SKT 5A 125V	75915	281005
A29F4	2110-0683	2		FUSE .75A 125V NTD .3×.103UL	04703	255.750
	2110-0554	6		FUSEHOLDER-BIPIN SKT 5A 125V	75915	281005
A29F91	2110-0671	8	1	FUSE .125A 125V NTD .28×.096	04073	255.125
	2110-0554	6		FUSEHOLDER-BIPIN SKT 5A 125V	75915	281005
A29F92	2110-0684	3	2	FUSE 2A 125V NTD .3×.103 UL	04073	255002
A29F93	2110-0684	3		FUSE 2A 125V NTD .3×.103 UL	04073	255002
A29J1	1251-4670	2	2	CONN-POST TYPE .100-PIN-SPCG 3-CONT	03206	65500-103
A29J2	1251-4670	2		CONN-POST TYPE .100-PIN-SPCG 3-CONT	03206	65500-103
A29J3	1251-6857	1	5	CONN-POST TYPE .100-PIN-SPCG 2-CONT	01380	87220-2
A29J4	1251-6857	1		CONN-POST TYPE .100-PIN-SPCG 2-CONT	01380	87220-2
A29J5	1251-6857	1		CONN-POST TYPE .100-PIN-SPCG 2-CONT	01380	87220-2

See introduction to this section for ordering information

Replacement for page 6-74

Table 6-2. Replaceable Parts (Cont'd)

Reference Designator	HP Part Number	C D	Qty	Description	Mfr Code	Mfr Part Number
A29J8	1251-6857	1		CONN-POST TYPE .100-PIN-SPCG 2-CONT	01380	87220-2
A29J9	1251-6857	1		CONN-POST TYPE .100-PIN-SPCG 2-CONT	01380	87220-2
A29JU1	1258-0141	8	7	JUMPER-REMOVEABLE FOR .025IN SQ PINS	28480	1258-0141
A29JU2	1258-0141	8		JUMPER-REMOVEABLE FOR .025IN SQ PINS	28480	1258-0141
A29JU3	1258-0141	8		JUMPER-REMOVEABLE FOR .025IN SQ PINS	28480	1258-0141
A29JU4	1258-0141	8		JUMPER-REMOVEABLE FOR .025IN SQ PINS	28480	1258-0141
A29JU5	1258-0141	8		JUMPER-REMOVEABLE FOR .025IN SQ PINS	28480	1258-0141
A29JU8	1258-0141	8		JUMPER-REMOVEABLE FOR .025IN SQ PINS	28480	1258-0141
A29JU9	1258-0141	8		JUMPER-REMOVEABLE FOR .025IN SQ PINS	28480	1258-0141
A29L1	04945-80038	8	1	CHOKE 230 UH	28480	04945-80038
A29L2	9140-0137	1	1	INDUCTOR RF-CH-MLD 1MH 5% .2DX .45LG Q=60	28480	9140-0137
A29L3	04945-80041	3	1	REACTOR-CONTROL	28480	04945-80041
A29L4	04945-80039	9	1	INDUCTOR 8UH	28480	04945-80039
	1480-0529	7	1	PIN-ESC .071-IN-DIA 1.42-IN-LG STL	28480	1480-0529
A29L5	04945-80040	2	1	COIL 2UH 10A	28480	04945-80040
	9170-1207	1	1	ADJUSTING SCREW OD: 244IN; L .875IN	28480	9170-1207
A29L6	9100-2515	9	2	INDUCTOR 100UH 10% .5DX1.25LG Q=26	28480	9100-2515
A29L7	9100-2515	9		INDUCTOR 100UH 10% .5DX1.25LG Q=26	28480	9100-2515
A29Q1	1855-0485	9	2	TRANSISTOR MOSFET N-CHAN TO-3	03038	STM3001
	1205-0431	8	2	HEAT SINK TO-3-CS	28480	1205-0431
A29Q2	1855-0485	9		TRANSISTOR MOSFET N-CHAN TO-3	03038	STM3001
	1205-0431	8		HEAT SINK TO-3-CS	28480	1205-0431
A29Q3	04945-62611	5	1	ASSY-XSTR & H/S	28480	04945-62611
A29Q4	1854-0687	1	1	TRANSISTOR NPN 2N3725A SI TO-39 PD=5W	01295	2N3725A
	1200-0181	5	2	INSULATOR-XSTR NYLON	28480	1200-0181
	1205-0391	9	2	HEAT SINK SGL TO-5/TO-39-CS	28480	1205-0391
A29Q5	1853-0489	9	1	TRANSISTOR PNP TO-39 PD=1W FT=100MHZ	04713	MM4032
	1200-0181	5		INSULATOR-XSTR NYLON	28480	1200-0181
	1205-0391	9		HEAT SINK SGL TO-5/TO-39-CS	28480	1205-0391
A29Q7	1854-0477	7	2	TRANSISTOR NPN 2N2222A SI TO-18 PD=500MW	04713	2N2222A
A29Q8	1854-0477	7		TRANSISTOR NPN 2N2222A SI TO-18 PD=500MW	04713	2N2222A
A29Q9	1884-0201	8	1	THYRISTOR-SCR TO-92 VRRM=60	04713	2N5061
A29Q10	1854-0087	5	4	TRANSISTOR NPN SI PD=360MW FT=75MHZ	28480	1854-0087
A29Q12	1854-0087	5		TRANSISTOR NPN SI PD=360MW FT=75MHZ	28480	1854-0087
A29Q80	1853-0281	9	1	TRANSISTOR PNP 2N2907A SI TO-18 PD=400MW	04713	2N2907A
A29Q81	1854-0087	5		TRANSISTOR NPN SI PD=360MW FT=75MHZ	28480	1854-0087
A29R1	0686-1045	9	2	RESISTOR 100K 5% .5W CC TC=0+882	01121	EB1045
A29R2	0686-1045	9		RESISTOR 100K 5% .5W CC TC=0+882	01121	EB1045
A29R3	0683-1515	2	2	RESISTOR 150 5% .25W FC TC=-400/+600	01121	CB1515
A29R4	0683-1515	2		RESISTOR 150 5% .25W FC TC=-400/+600	01121	CB1515
A29R5	0837-0252	9	1	THERMISTOR-SURGE PTCTR 200HM AT 25DEG	02734	SG230
A29R6	0811-1063	8	2	RESISTOR 47 10% 1W PW TC=0±150	28480	0811-1063
A29R7	0811-1063	8		RESISTOR 47 10% 1W PW TC=0±150	28480	0811-1063
A29R10	0757-0405	4	1	RESISTOR 162 1% .125W F TC=0±100	02995	5033R
A29R12	2100-0568	1	1	RESISTOR-TRMR 100 10% C TOP-ADJ 1-TRN	28480	2100-0568
A29R13	0698-4037	0	2	RESISTOR 46.4 1% .125W F TC=0±100	02995	5033R
A29R14	0757-0462	3	1	RESISTOR 75K 1% .125W F TC=0±100	02995	5033R
A29R17	0757-0399	5	1	RESISTOR 82.5 1% .125W F TC=0±100	02995	5033R
A29R18	0757-0407	6	1	RESISTOR 200 1% .125W F TC=0±100	02995	5033R
A29R20	0689-1005	7	1	RESISTOR 10 5% 1W CC TC=0+412	01121	GB1005
A29R21	0811-1059	2	1	RESISTOR 15 5% 5W PW TC=0±400	28480	0811-1059
A29R22	0757-0470	3	2	RESISTOR 162K 1% .125W F TC=0±100	24546	C4-1/8-TO-1623-F
A29R23	0683-0335	2	2	RESISTOR 3.3 5% .25W FC TC=-400/+500	01121	CB33G5
A29R24	0757-0397	3	2	RESISTOR 68.1 1% .125W F TC=0±100	02995	5033R
A29R25	0757-0418	9	1	RESISTOR 619 1% .125W F TC=0±100	02995	5033R
A29R26	0698-0082	7	1	RESISTOR 464 1% .125W F TC=0±100	02995	5033R
A29R27	0757-0411	2	3	RESISTOR 332 1% .125W F TC=0±100	02995	5033R
A29R28	0698-4037	0		RESISTOR 46.4 1% .125W F TC=0±100	02995	5033R
A29R29	0757-0417	8	1	RESISTOR 562 1% .125W F TC=0±100	02995	5033R
A29R30	0757-0413	4	2	RESISTOR 392 1% .125W F TC=0±100	24546	C4-1/8-TO-392R-F
A29R31	0757-0466	7	1	RESISTOR 110K 1% .125W F TC=0±100	24546	C4-1/8-TO-1103-F
A29R32	0757-0401	0	4	RESISTOR 100 1% .125W F TC=0±100	02995	5033R
A29R33	0757-0290	5	1	RESISTOR 6.19K 1% .125W F TC=0±100	19701	MF4C1/8-TO-6191-F
A29R34	0698-5808	5	2	RESISTOR 4K 1% .125W F TC=0±100	05524	CMF-55-1, T-1
A29R35	0757-0435	0	1	RESISTOR 3.92K 1% .125W F TC=0±100	24546	C4-1/8-TO-3921-F
A29R36	0757-0397	3		RESISTOR 68.1 1% .125W FTC=0±100	02995	5033R
A29R37	2100-3965	8	1	RESISTOR-TRMR 5K 20% C TOP-ADJ 1-TRN	01007	90H5022
A29R38	0757-0438	3	1	RESISTOR 5.11K 1% .125W F TC=0±100	24546	C4-1/8-TO-5111-F
A29R39	0757-0273	4	1	RESISTOR 3.01K 1% .125W F TC=0±100	24546	C4-1/8-TO-3011-F
A29R40	0757-0384	7	1	RESISTOR 20.0 1% .125W F TC=0±100	02995	5033R
A29R41	0698-5808	5		RESISTOR 4K 1% .125W F TC=0±100	05524	CMF-55-1, T-1
A29R42	0757-0409	8	1	RESISTOR 274 1% .125W F TC=0±100	02995	5033R
A29R43	0757-0470	3		RESISTOR 162K 1% .125W F TC=0±100	24546	C4-1/8-TO-1623-F
A29R45	0757-0270	1	1	RESISTOR 249K 1% .125W F TC=0±100	24546	C4-1/8-TO-2493-F
A29R46	0757-0427	0	2	RESISTOR 1.5K 1% .125W F TC=0±100	02995	5033R
A29R47	0757-0401	0		RESISTOR 100 1% .125W F TC=0±100	02995	5033R

Table 6-2. Replaceable Parts (Cont'd)

Reference Designator	HP Part Number	C D	Qty	Description	Mfr Code	Mfr Part Number
A29R48	0757-0411	2		RESISTOR 332 1% .125W F TC=0±100	02995	5033R
A29R49	0757-0401	0		RESISTOR 100 1% .125W F TC=0±100	02995	5033R
A29R54	0683-0335	2		RESISTOR 3.3 5% .25W FC TC=-400/+500	01121	CB33G5
A29R55	0757-0403	2	2	RESISTOR 121 1% .125W F TC=0±100	24546	C4-1/8-TO-121R-F
A29R56	2100-4079	7	2	RESISTOR-TRMR 500 20% C TOP-ADJ 1-TRN	03744	3359P-1-501
A29R57	0757-0411	2		RESISTOR 332 1% .125W F TC=0±100	02995	5033R
A29R58	0757-0294	9	2	RESISTOR 17.8 1% .125W F TC=0±100	02995	5033R
A29R59	2100-4079	7		RESISTOR-TRMR 500 20% C TOP-ADJ 1-TRN	03744	3359P-1-501
A29R60	0757-0403	2		RESISTOR 121 1% .125W F TC=0±100	24546	C4-1/8-TO-121R-F
A29R61	0757-0427	0		RESISTOR 1.5K 1% .125W F TC=0±100	02995	5033R
A29R62	0757-0294	9		RESISTOR 17.8 1% .125W F TC=0±100	02995	5033R
A29R80	0757-0200	7	1	RESISTOR 5.62K 1% .125W F TC=0±100	24546	C4-1/8-TO-5621-F
A29R81	0757-0283	6	1	RESISTOR 2K 1% .125W F TC=0±100	02995	5033R
A29R82	0757-0447	4	1	RESISTOR 16.2K 1% .125W F TC=0±100	24546	C4-1/8-TO-1622-F
A29R83	0757-0413	4		RESISTOR 392 1% .125W F TC=0±100	24546	C4-1/8-TO-392R-F
A29R84	0757-0124	4	1	RESISTOR 39.2K 1% .125W F TC=0±100	02995	5033R
A29R85	0757-0401	0		RESISTOR 100 1% .125W F TC=0±100	02995	5033R
A29R86	0757-0422	5	2	RESISTOR 909 1% .125W	02995	5033R
A29R87	0757-0422	5		RESISTOR 909 1% .125W	02995	5033R
A29T1	04945-80037	7	1	XFMR-DRIVE	28480	04945-80037
A29T2	04945-80035	5	1	XFMR 5V, 16V	28480	04945-80035
A29TS1	3103-0112	8	1	SWITCH-THERM FXD 80C OPN-ON-RISE	06784	TS80B
A29U1	1906-0237	8	2	DIODE-FW BRDG 600V 1A	28480	1906-0237
A29U2	1906-0237	8		DIODE-FW BRDG 600V 1A	28480	1906-0237
A29U3	1906-0238	9	1	DIODE-45V 30A	01691	SD2416
	1205-0256	5	1	HEAT SINK-TO-3-CS	02123	690-3-B
A29U4	1826-0161	7	1	IC OP AMP GP QUAD 14-DIP-P PKG	04713	MLM324P
A29U5	1826-0643	0	1	IC V RGLTR-V-REF-ADJ 3/30V TO-92 PKG	28480	1826-0643
A29U6	1826-0393	7	1	IC V RGLTR TO-220	27014	LM317T
	0340-0949	8	2	INSULATOR-XSTR THRM CNDCT	02923	60-11-5791-1674
	0590-0076	1	2	NUT-HEX-PLSTC LKG 4-40-THD .143-IN-THK	04559	21NM-40
	2190-0416	7	2	WASHER-FL-MTLC NO.4 .125-IN-ID	28480	2190-0416
	2200-0143	0	2	SCREW-MACH 4-40 .375-IN-LG PAN-HD-POZI	28480	2200-0143
	3050-1021	7	2	WASHER-SHLDR NO.4 .116-IN-ID .215-IN-OD	02608	7721-7PPS
A29U7	1990-0543	6	1	OPTO-ISOLATOR LED-PXSTR IF=150MA-MAX	01295	TIL116
A29U8	1826-0527	9	1	IC 337 V RGLTR TO-220	27014	LM337T
	0340-0949	8		INSULATOR-XSTR THRM CNDCT	02923	60-11-5791-1674
	0590-0076	1		NUT-HEX-PLSTC LKG 4-40-THD .143-IN-THK	04559	21NM-40
	2190-0416	7		WASHER-FL-MTLC NO.4 .125-IN-ID	28480	2190-0416
	2200-0143	0		SCREW-MACH 4-40 .375-IN-LG PAN-HD-POZI	28480	2200-0143
	3050-1021	7		WASHER-SHLDR NO.4 .116-IN-ID .215-IN-OD	02608	7721-7PPS
A29U9	1990-0664	2	1	OPTO-ISOLATOR LED-PXSTR IF=50MA-MAX	24972	CNY 21
A29V91	1970-0091	7	1	TUBE ELECTRON B2-B470 SURGE V PTCTR	06121	B2-B470
	1400-0909	9	1	CLIP CMPNT .312-DIAM VINYL	02201	V-1001
A29VR1	1902-3295	6	1	DIODE-ZNR 33.2V 5% DO-35 PD=.4W	28480	1902-3295
A29VR3	1902-1349	7	1	DIODE-ZNR 5.9V 2% PD=.4W	28480	1902-1349
A29VR4	1902-0779	5	4	DIODE-ZNR 11.8V 5% DO-15 PD=1W TC=+.064%	28480	1902-0779
A29VR5	1902-0779	5		DIODE-ZNR 11.8V 5% DO-15 PD=1W TC=+.064%	28480	1902-0779
A29VR6	1902-0779	5		DIODE-ZNR 11.8V 5% DO-15 PD=1W TC=+.064%	28480	1902-0779
A29VR7	1902-0779	5		DIODE-ZNR 11.8V 5% DO-15 PD=1W TC=+.064%	28480	1902-0779
A29VR9	1902-3180	8	1	DIODE-ZNR 11.8V 2% DO-35 PD=.4W	28480	1902-3180
A29VR10	1902-3194	4	1	DIODE-ZNR 13.3V 2% DO-35 PD=.4W	28480	1902-3194
A29VR80	1902-0080	1	1	DIODE-ZNR 14.7V 2% DO-14 PD=.4W TC=+.08%	28480	1902-0080
A29VR81	1902-0182	4	2	DIODE-ZNR 20.5V 5% DO-35 PD=.4W	28480	1902-0182
A29VR82	1902-0182	4		DIODE-ZNR 20.5V 5% DO-35 PD=.4W	28480	1902-0182
A29VR91	1902-0943	5	1	DIODE-ZNR 2.4V 5% DO-35 PD=.4W	28480	1902-0943
	0403-0282	6	4	BUMPER FOOT-ADH MTG 12.7-MM-WD	28480	0403-0282
	1390-0515	0	5	FASTENER-SNAP-IN NUT NUT-EXPANSION; FOR	28480	1390-0515
	2360-0113	2	5	SCREW-MACH 6-32 .25 PAN-HD-POZZI	28480	2360-0113
	04945-00034	6	1	12V CHASSIS	28480	04945-00034
	0340-1097	9	2	INSULATOR NOMEX-NYL-PPR	28480	0340-1097
	0400-0002	2	3	GROMET-RND .188-IN-ID .312-IN-GRY-OD	04604	1656

Replacement for page 6-76

8-17a. POWER SUPPLY TROUBLESHOOTING

The following flow charts can be used to troubleshoot either of the two HP4945A power supplies (A28 and A29) to component level. For more information on the supplies refer to 8-75, Power Supply/Motherboard section.

Table 8-63. Overall Power Supply Troubleshooting

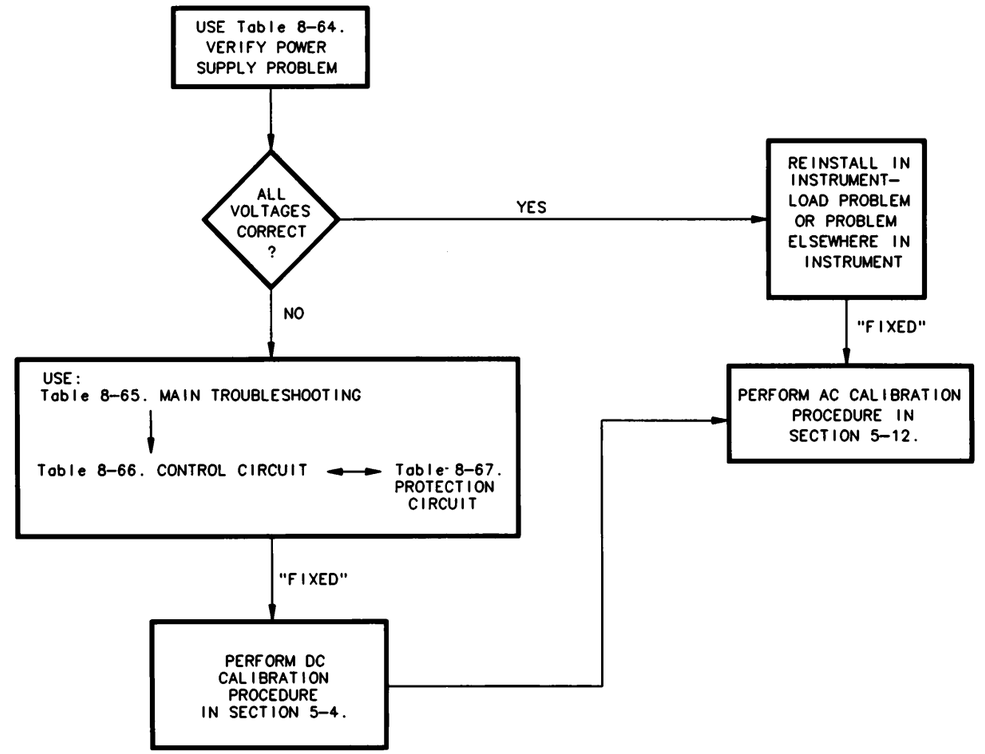

Table 8-64. Verify Power Supply Problem

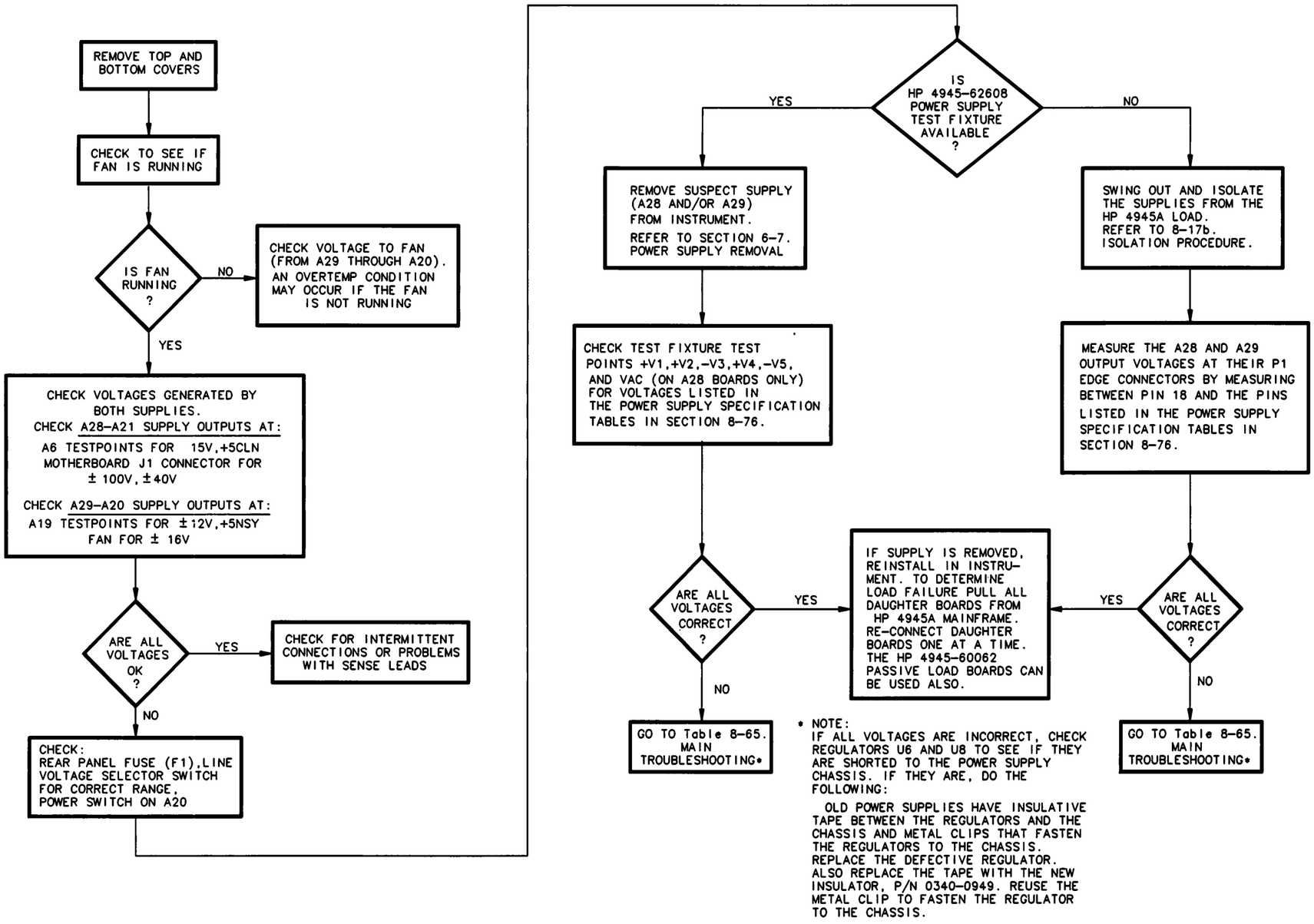

Table 8-65. Main Troubleshooting

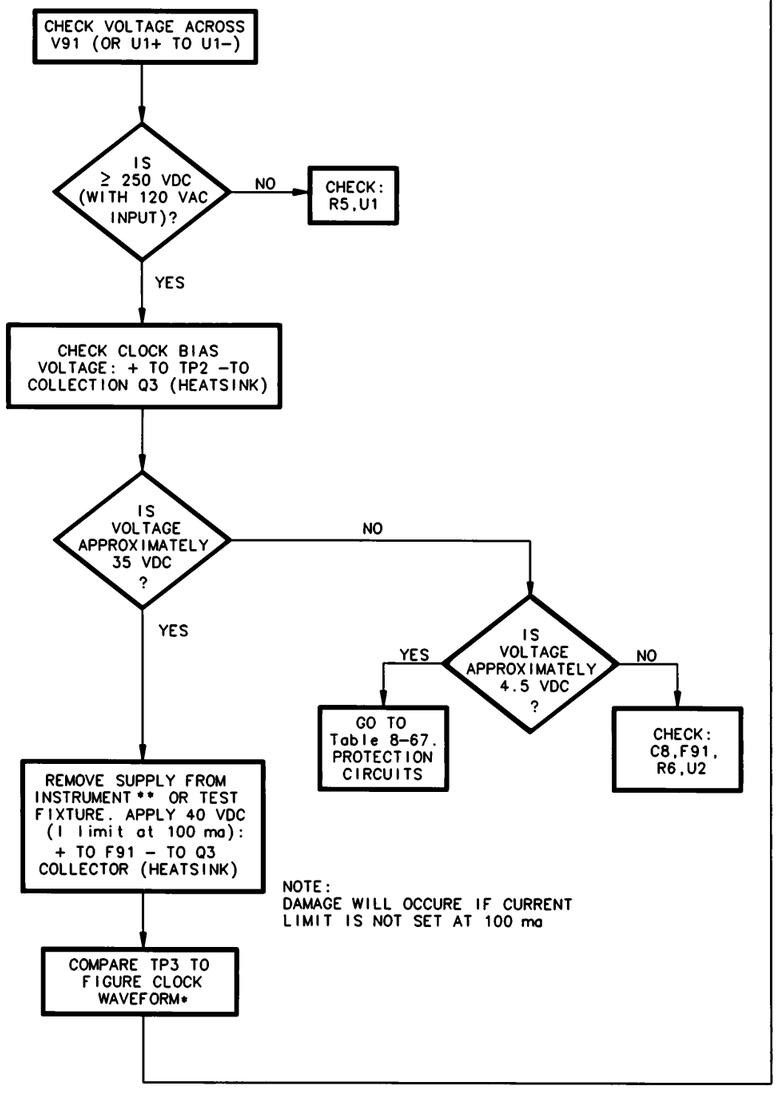

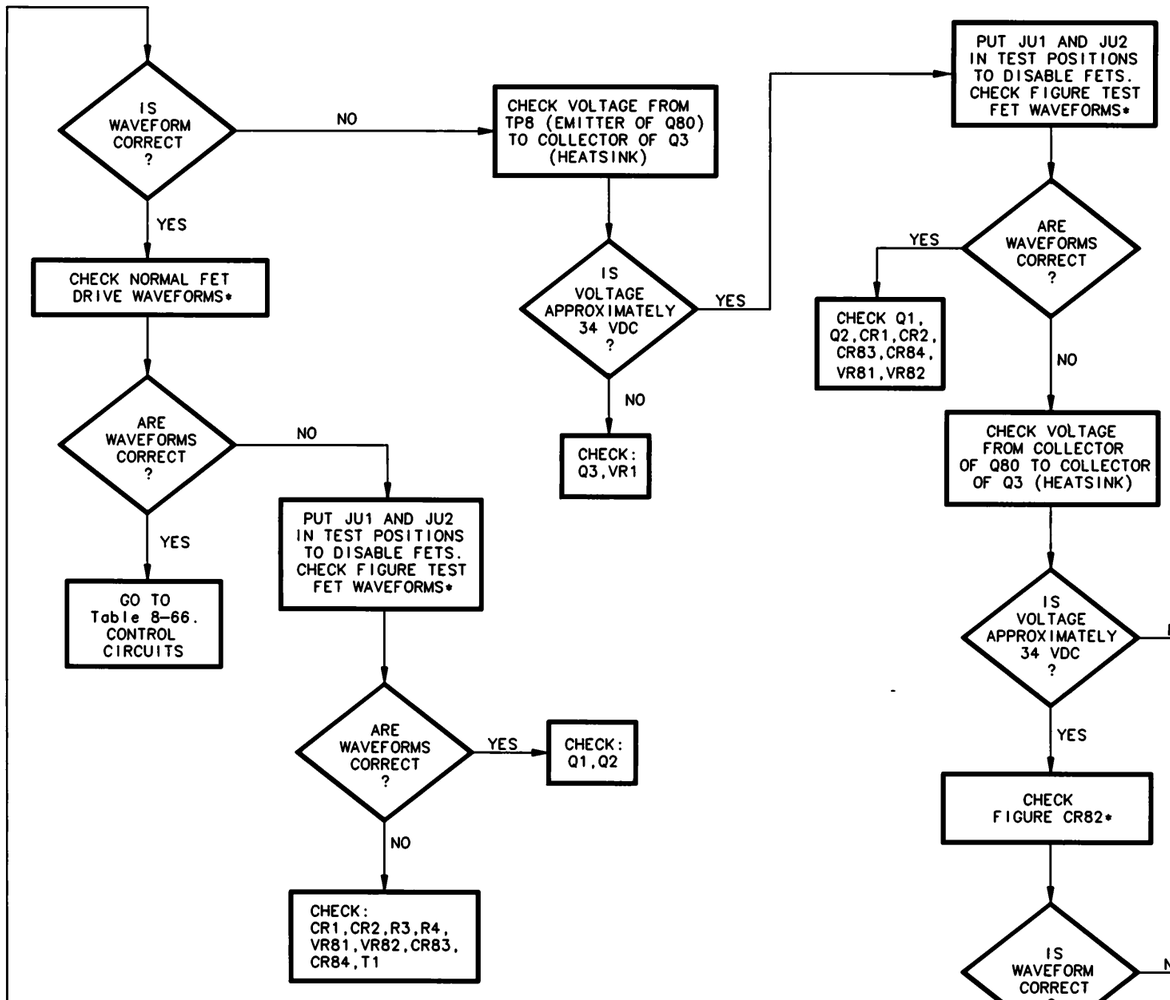

* NOTE: ALL WAVEFORMS REFERRED TO BELOW ARE FOUND IN SECTION 8 ON THE POWER SUPPLY SCHEMATIC.

** TO REMOVE SUPPLY FROM INSTRUMENT REFER TO SECTION 6-7. POWER SUPPLY REMOVAL.

Table 8-66. Control Circuits

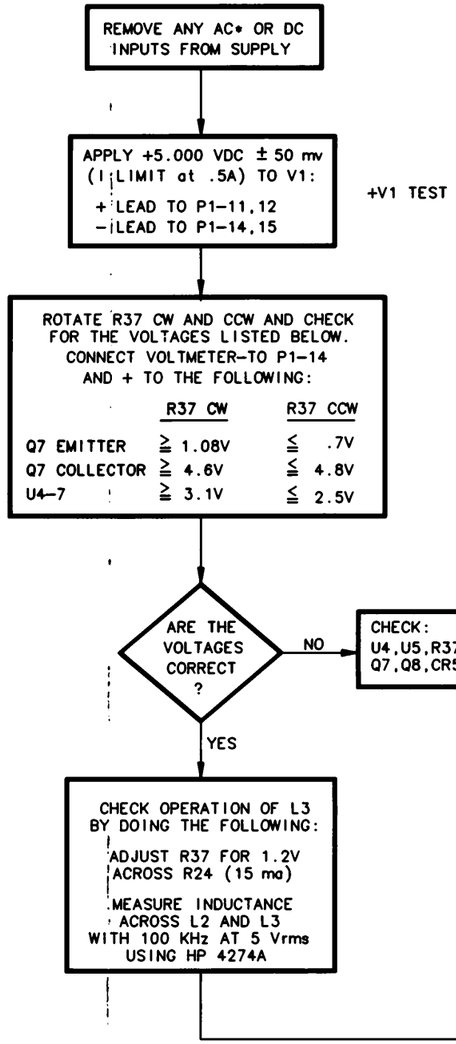

* REMOVE SUPPLY FROM TEST FIXTURE OR INSTRUMENT (REFER TO SECTION 6-7.POWER SUPPLY REMOVAL).

Table 8-67. Protection Circuits

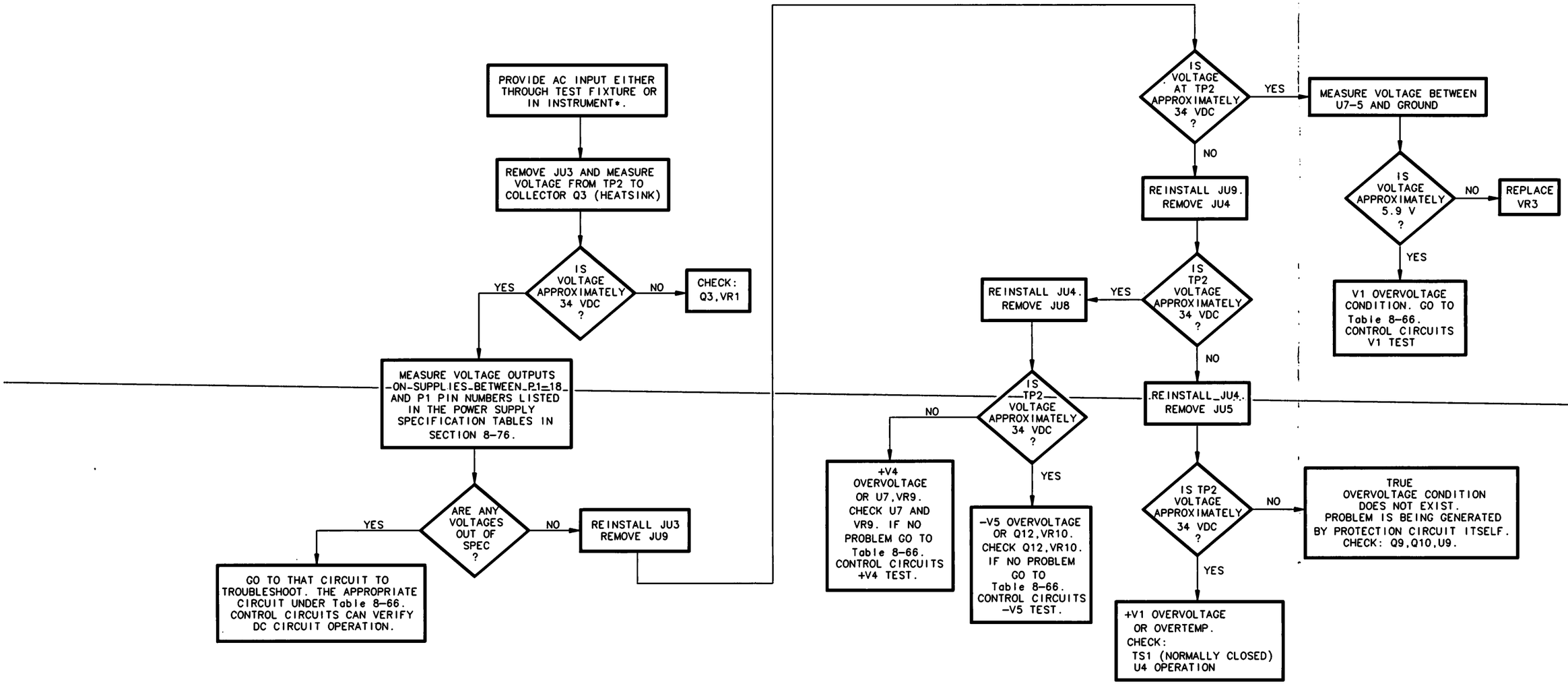

* IF SUPPLY IS IN INSTRUMENT MAKE SURE IT IS ISOLATED FROM THE HP 4945A. REFER TO 8-17b. ISOLATION PROCEDURE.

8-17b. POWER SUPPLY ISOLATION PROCEDURE

A28/A21

The combination of A28 and A21 can be operated without using the HP 4945A as a load. Swing the A28/A21 boards out as explained under Section 6-7, Power Suppy Removal, then isolate the A28 supply from the HP 4945A by doing the following:

NOTE: A28/A21 cannot be isolated from A29/A20 because AC power to A28/A21 comes through A20W2.

1. Unsolder the sense leads (W1, W2, W3, and W4) from A21 (refer to A21 component locator).

2. Connect a jumper wire from the +5 CLN test point to the +S test point.

3. Connect a jumper wire from the -S test point to the ground test point.

A29/A20

The combination of A29 and A20 can be operated without using the HP 4945A as a load. Swing out the A29/A21 boards as explained under Section 6-7, Power Supply Removal, then isolate the supply from the HP 4945A by doing the following:

1. Disconnect W3 from the A19 board.

2. Disconnect W2 from A21 board (this will disconnect AC power to A28/A21).

3. Make sure sense wires on A21 are unsoldered (step 2 of A28/A21 Isolation Procedure).

4. Connect a jumper from the +5 NSY test point to the +S test point by connecting the two pins of JU2. Refer to the A20 component locator.

5. Connect a jumper from the -S test point to the ground test point by connecting the two pins of JU1. Refer to the A20 component locator.

8-75. POWER SUPPLY/MOTHERBOARD SECTION

The HP 4945A has two main power supply boards.

- 04945-60067 15 Volt Power Supply
  (A28) Provides +5V CLN, +19V, +-15V and 48 Vrms

- 04945-60068 12 Volt Power Supply
  (A29) Provides +5V NSY, +-12V and +-16V for the fan.

The A21 DC Interconnect board distributes dc voltages from the 04945-60067 (A28) supply to the rest of the HP 4945A. It also generates +-100V and +-40V.

The A20 AC Switching board connects to the 04945-60068 (A29) supply and switches the ac line voltage to both supplies. It also filters +-16V to the fan.

Refer to the HP 4945A Block diagram, the power supply block diagram and the schematic diagrams when reading this section.

8-76. Power Supply (A28, A29)

The HP 4945A has two power supplies; the +-15 volt supply is A28 and the +-12 volt supply is A29. Both supplies provide +5 volts as well, and are similar with only a few component differences. The power supply theory is applicable to both boards.

Following is a summary of the power supply specifications.

A28 04945-60067 Power Supply Specifications

	Output Voltage	Adjustment Range	Rated Current	Overvoltage Trip Point	Peak-to-Peak Ripple	P1 Pin #
+V1	+5 CLN	+- .25 V	4 A	6 to 7 V	100 mV	11,12
+V4	+15	+- .75 V	.75 A	16 to 17.5	100 mV	19
-V5	-15	+- .75 V	.75 A	-16 to -17.5V	100 mV	21
+V2	+19	--	--	--	200 mV	17
VAC	48 Vrms	--	.13 A	--	--	N/A

A29 04955-60068 Power Supply Specifications

	Output Voltage	Adjustment Range	Rated Current	Overvoltage Trip Point	Peak-to Peak Ripple	P1 Pin #
+V1	+5 NSY	+- .25 V	5 A	6 to 7 V	100 mV	11,12
+V4	+12	+- .6 V	.8 A	13 to 14.75 V	100 mV	19
-V5	-12	+- .6 V	.8 A	13 to 14.75 V	100 mV	21
+V2	+16	--	.2 A	24 V clamp	200 mV	17
-V3	-16	--	.2 A	24 V clamp	200 mV	16

Input and FET Switches

Ac line voltage goes through a line filter before it is applied to the input rectifier (U1) and filtered. The voltage selector switch on the rear panel connects the input rectifier as a voltage doubler for 115 V ac operation, and as a full-wave rectifier circuit for 230 V ac operation, so that for either ac input range, the dc voltage accross Q1 and Q2 is nominally 325 volts. Q1 and Q2 are switched on and off alternately by the clock and not-clock signals, producing a square wave input to the series resonant circuit.

Series Resonant Circuit

The series resonant tank circuit consists of L1, T2, C20 and C30. Essentially, this circuit converts the square wave into a sine wave across the primary of T2. If the frequency of the square wave is equal to the resonant frequency of this tank circuit, then the maximum voltage is transferred to the supply rectifiers. As the switching frequency is increased from resonance, the output voltage drops to the desired level. This is how output voltage regulation is achieved.

The supply's clock frequency is current controlled and varies over a range of frequencies above the resonant frequency of the series resonant circuit. The output voltage is controlled by variations in the clock frequency.

If the load current drawn from the supply decreases, the Q of the resonant circuit increases. The voltage control circuit compensates for the change in Q by increasing the clock frequency to maintain a constant output voltage. The voltage from the series resonant circuit is rectified and filtered before going to voltage regulators and then to the pc boards.

Voltage Control Circuit

The V1 output voltage is sensed and compared to a reference voltage at U4B in the voltage control circuit. The output of U4B drives Q7 which controls the current through L3. L3 is a saturable-core reactor whose inductance in the two ac windings varies inversely with the control current in the dc winding. The inductance of L3 determines the clock frequency.

Startup and Clock Circuit

In this description, all voltages are referenced to the -clock bias supply (Q5 collector). At initial turn on, the clock bias supply provides about 40 V dc across the clock circuit. When the voltage across diac CR81 reaches approximately 22 V dc, CR81 conducts and starts the clock circuit oscillating. Once the clock circuit begins to run, the startup circuit of R14 and CR81 no longer influences the clock. Q3 is a shunt regulator. Q80 operates as a switch controlled by Q81, VR80 and R83. Q80 is turned on only when the voltage across the + and - lines of the clock bias supply is sufficient to enable the clock circuit to operate properly. During operation, Q4 and Q5 turn on alternately to provide positive and negative going transitions through the primary of T1. Q5 supplies current through T1 on the negative half of the clock cycle and Q4 supplies current through T1 on the positive half of the clock cycle. For each transition, the particular transistor initially supplies all the current for T1.

The current through L3 increases until it supplies all the current and the transistor is turned off. The other transistor then turns on and the cycle continues. Once the clock circuit begins to run, the startup circuit of R14 and CR81 no longer influences the clock.

Power Supply Protection

VR9 and VR10 detect overvoltage conditions. If the output voltage exceeds the diode breakdown voltage, current flows through optical isolator U7. The output of U7 turns on Q10 which causes current to flow through U9. The voltage developed across R46 turns on Q9 which shuts down the clock bias supply. Q9 remains on until the ac input voltage is turned off.

TS1 senses over temperature conditions. The power supply is shut down if the temperature exceeds 80 degrees C. The same shut down path is used as for the overvoltage shutdown.

In the voltage control circuit, U4D and Q8 protect against output voltage overshoot when ac power is turned off and then rapidly turned on again. U4C reduces the control loop gain in high line voltage, low load conditions.

8-77. AC Mains Switching (A20)

A20 connects to the A29 supply. It distributes the dc outputs from that supply, filters the dc voltage to the fan and holds the ac power switch.

The fused ac line is connected to the power switch. The switched ac line is applied to the A29 supply and to the A28 supply via A20W2 through the A21 board.

The +5 volt return and other common ground lines are tied together on this board to form a common ground for the entire instrument.

A28 outputs +5 NSY, +12 Vdc, -12 Vdc and GND are sent to A19 via A20W3. +5 NSY and its return also go to A21 via J2. +5 NSY is the noisy +5 supply since 20 kHz switching noise is induced from the CRT driver board (A19).

A28 +- 16 Vdc outputs are connected to an LC filter and then to the fan via A20W4. The filter keeps fan switching transients from distorting the display and lowers the supply voltage to the fan. The voltage at the fan is approximately 27.5 volts and the current is 220 mA.

Sense lines from the A28 power supply are connected to the motherboard between A11 and A12. These are feedback lines that ensure that the +5 NSY voltage is always 5.00 volts at these boards.

8-78. DC Connect board (A21)

All the input and output connections to the A28 supply are through the A21 board. It distributes all dc power to the A22 motherboard. The +- 100 Vdc supply is on this board as well as the floating +- 40 Vdc supply.

VAC, a 48 Vrms, 200 kHz sine wave output from the A28 supply is connected to A21 via A21J3. This signal is applied to the primaries of T1 and T2.

The secondary of T1 creates a 60 Vrms center-tapped output which is rectified and filtered to produce the +- 40 Vdc floating supplies.

The secondary of T2 creates a 250 Vrms center-tapped output. The center tap is connected to system ground. This voltage is rectified and filtered to produce the +- 100 Vdc supplies. Regulation is accomplished by Q1 through Q4 and their associated circuits.

These dc outputs along with the +- 15 Vdc and + 5 Vdc from the A28 supply are sent to the A22 motherboard through A21J1. The +5 volts from the A28 supply is designated as +5 CLN. The +5 NSY voltage comes to A21 from A20 and also goes out A21J1. All non-floating dc return paths are tied together on A21 to form the system ground.

Sense lines from A21 are connected to the motherboard between A5 and A6. These are feedback lines that ensure that the +5 CLN and +5 NSY voltages are always +5.00 volts at the motherboard.

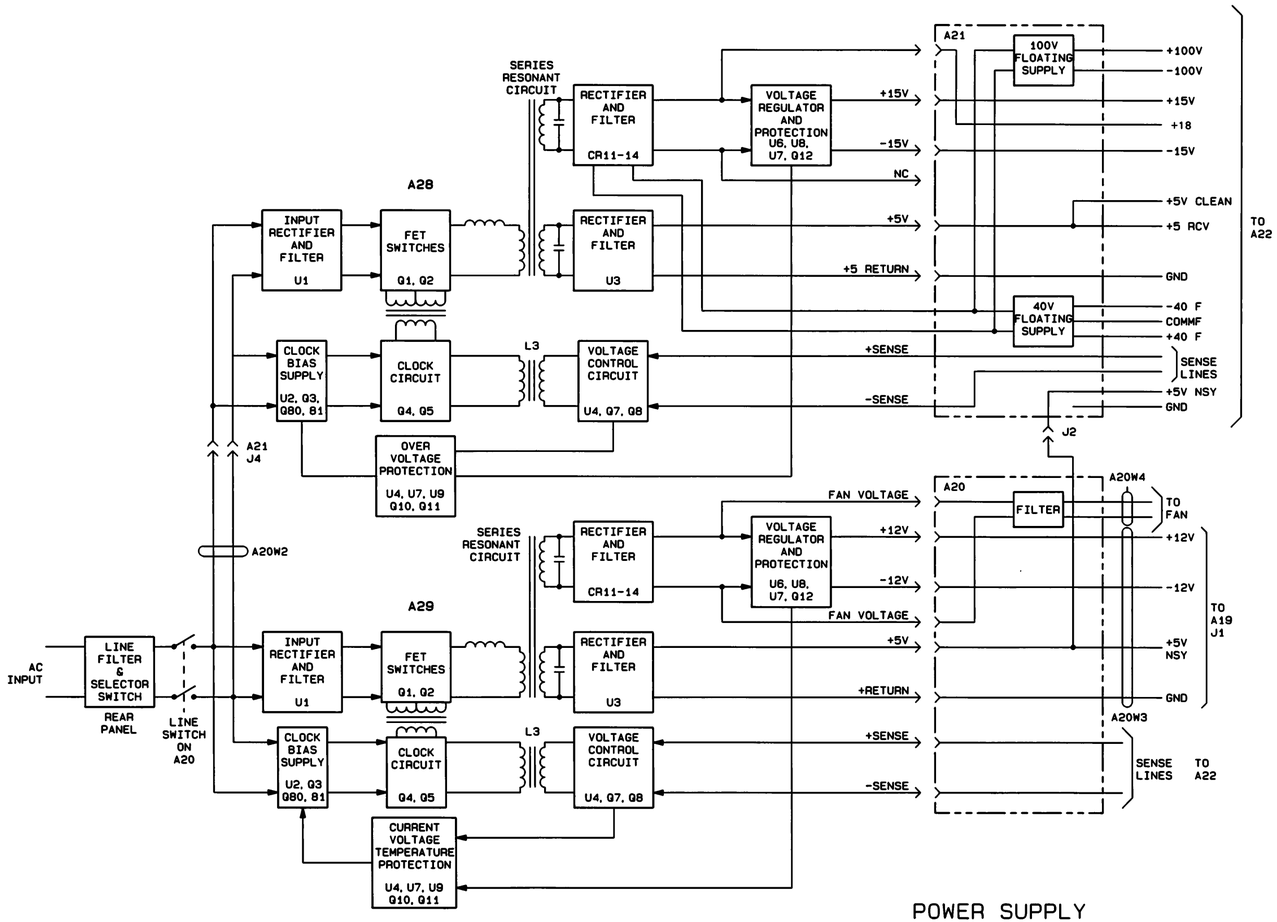

Figure 8-54. Power Supply Block Diagram
Replacement for page 8-345

GREY SHADED COMPONENTS
APPEAR ONLY ON A29
(04945-60068) BOARDS.

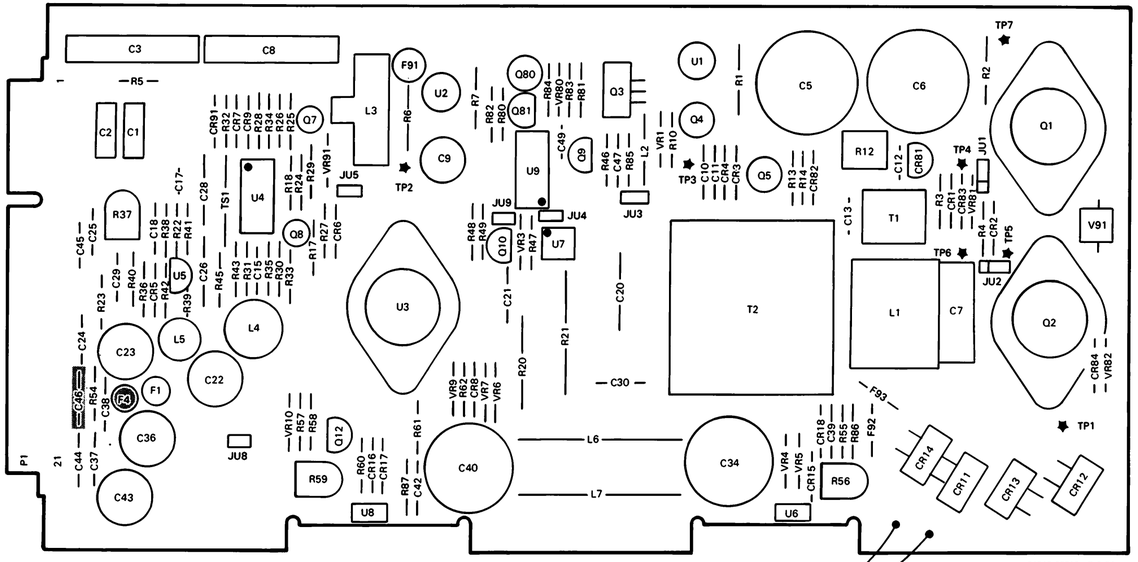

NOTE: ROTATE COMPONENT LOCATOR 180° WHEN TROUBLESHOOTING POWER SUPPLY BOARDS IN TEST FIXTURE.

COMPONENT LOCATOR FOR ASSEMBLIES
A28 (04945-60067)
A29 (04945-60068)

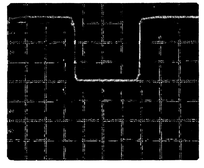

Vert: 10v/div
Horiz: 1usec/div

Scope probe on TP3
Scope ground on Collector Q3

Figure Clock Waveform

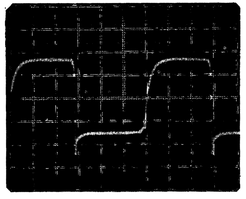

Vert: 10v/div
Horiz: 1usec/div
JU1 and JU2 in NORMAL position

Scope probe TP4, scope ground TP1
Scope probe TP5, scope ground TP6

Figure NORMAL FET Waveforms

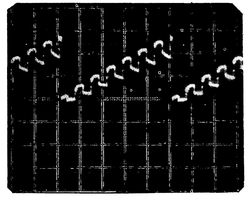

Vert: 5v/div
Horiz: 10usec/div

Scope probe on Cathode CR82
Scope ground Collector Q3

Figure CR82

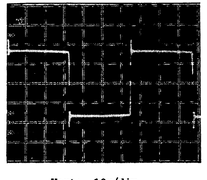

Vert: 10v/div
Horiz: 1usec/div
JU1 and JU2 in TEST position

Scope probe TP4, scope ground TP1
Scope probe TP5, scope ground TP6

Figure TEST FET Waveforms

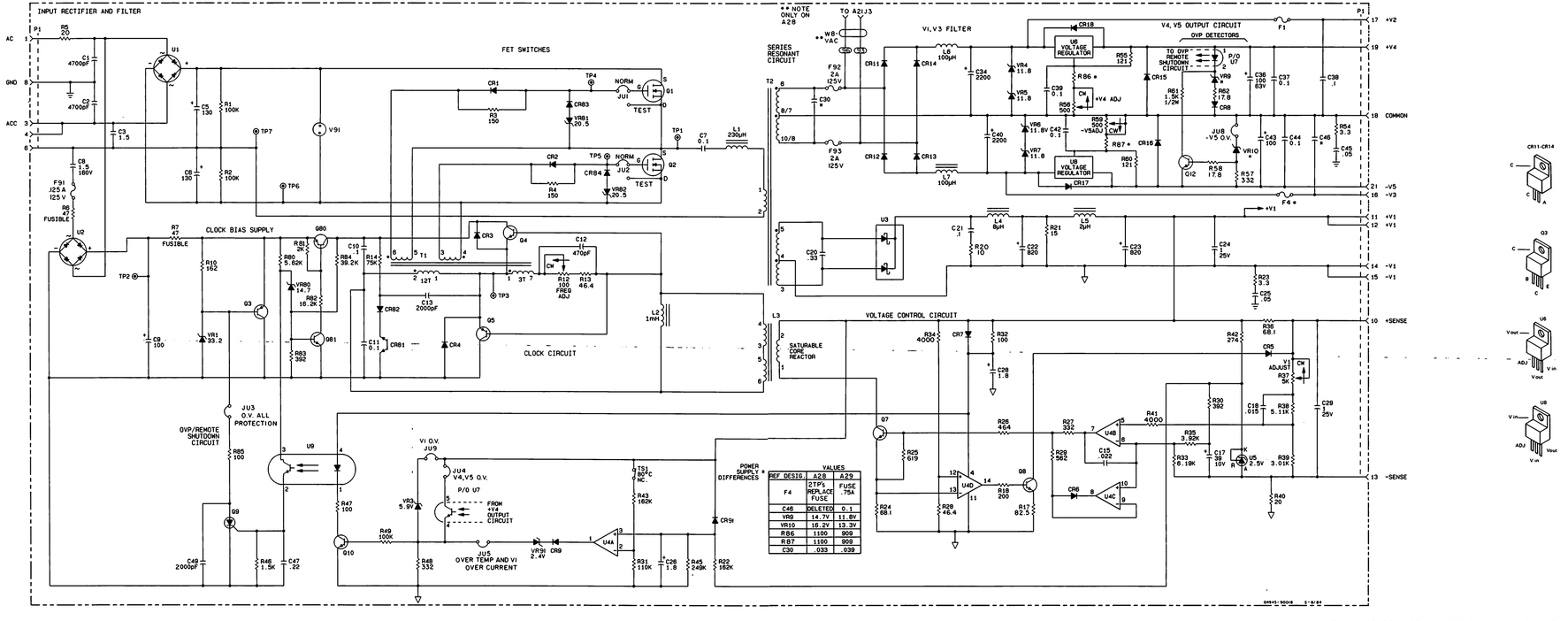

Figure 8-55. A28 and A29 Power Supply Schematic Diagram
Replacement for page 8-347

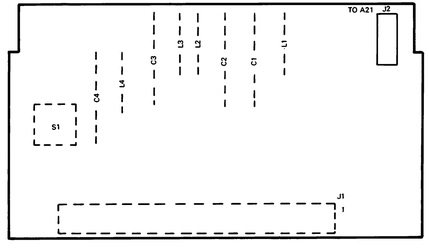

04945-60020 O-1/83

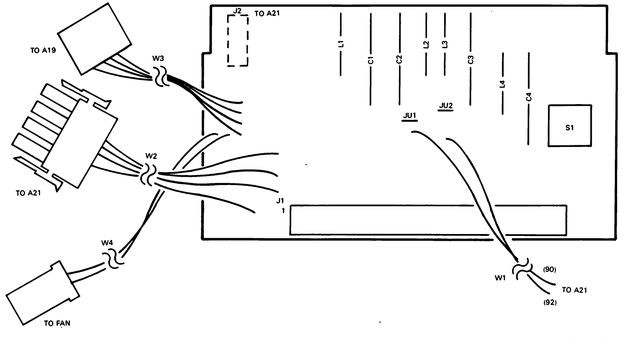

04945-60020 O-9/84 REV. A-2316

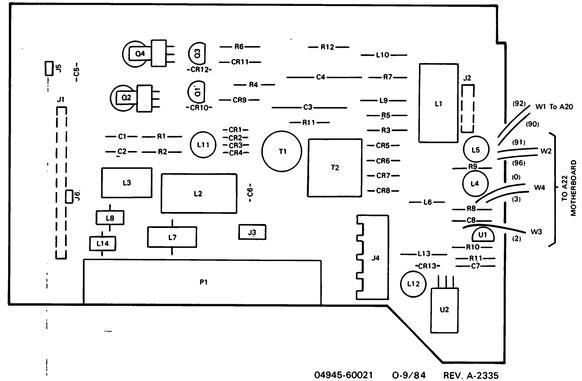

04945-60021 O-9/84 REV. A-2335

Replacement for page 8-348

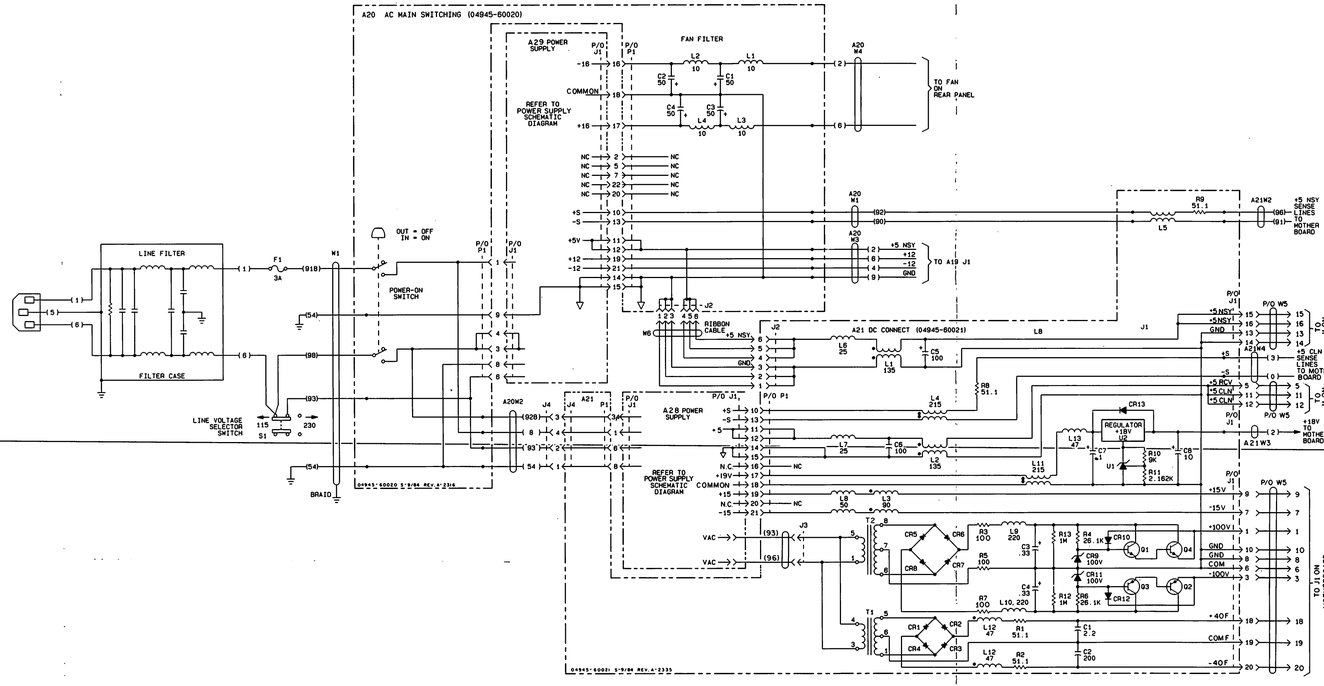

Figure 8-56. Power Supply AC and DC Interconnection Schematic Diagram

Replacement for page 8-349

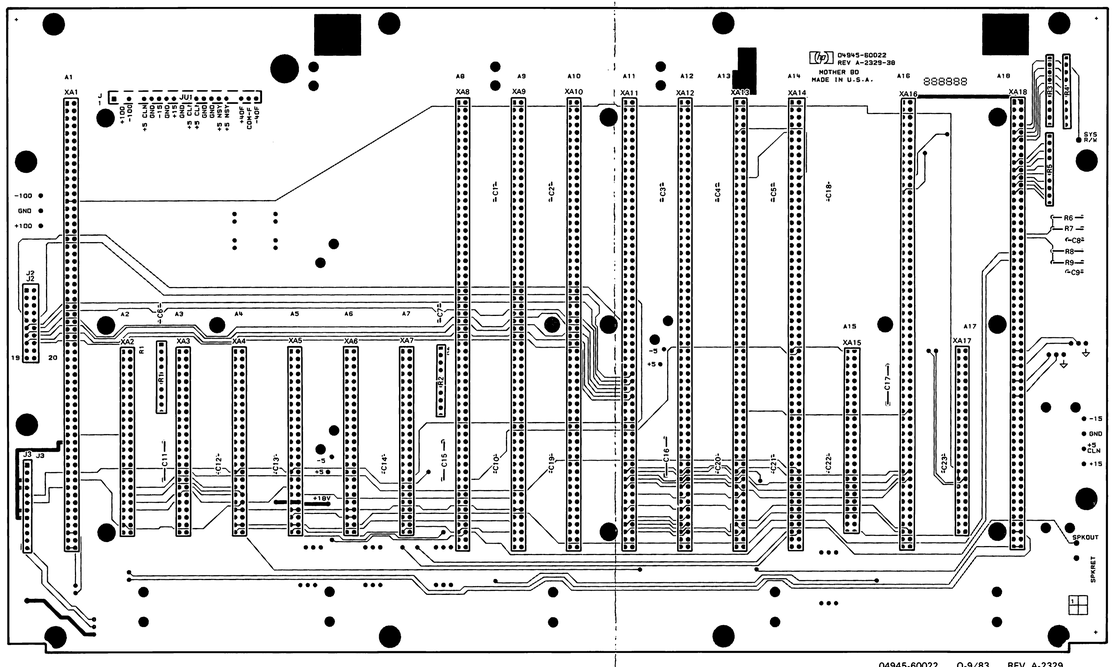

04945-60022 0-9/83 REV. A-2329

+ 5 VOLT SIGNATURE TABLE

The + 5 V signatures listed below are taken on the +5 volt TP on A11 with the Signature Analyzer in the Normal Mode and connected as follows:

A11TP2 in Normal A11 JU602 Removed

START ST2 TP1-7 rising edge
STOP SP2 TP1-8 falling edge
CLOCK CLK1 TP1-1 rising edge

A11 S406 SWITCH POS. DEC.	BINARY	+5V SIGNATURES	BOARD TESTED	SA PROGRAM LOOP #	CIRCUITS TESTED
1	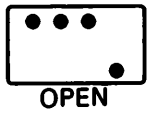 OPEN	6324	A11	LOOP 1	A11 SYSTEM ROM
2	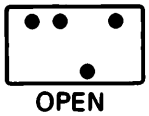 OPEN	611H	A11	LOOP 2, 2:15	A11 SYSTEM RAM
3	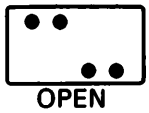 OPEN	C6FF	A11	LOOP 3a, 3a:15	A11 PERIPHERALS: BANK SELECT, LED DRIVER CIRCUITRY, GRAPHICS RAM ENABLE
			A13	LOOP 3c, 3c:15	A13 CRTC
4	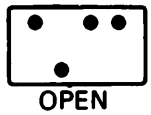 OPEN	99P9	A12	LOOP 4, 4:15	A12 MAIN ROMS
5	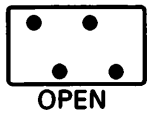 OPEN	77U6	A12	LOOP 5, 5:15	A12 BANK 1&2 ROM
6	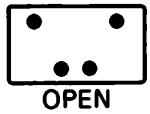 OPEN	3P25	A12	LOOP 6, 6:15	A12 BANK 3&4 ROM
7	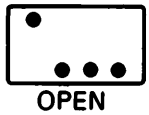 OPEN	3P25	A12	LOOP 7, 7:15	A12 BANK 5&6 ROM
8	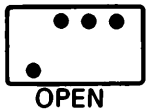 OPEN	A9P2	A12	LOOP 8, 8:15	A12 BANK 7 ROM

A11 S406 SWITCH POS. DEC.	A11 S406 SWITCH POS. BINARY	+5V SIGNATURES	BOARD TESTED	SA PROGRAM LOOP #	CIRCUITS TESTED
9	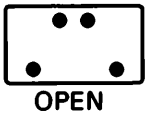 OPEN	294C	A10	LOOP 9, 9:15	SYSTEM ACCESS OF A10 SHARED RAM
10	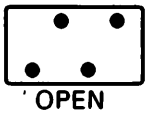 OPEN	3254	A12	LOOP 10, 10:15	A12 RAM
11	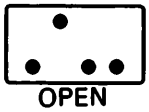 OPEN	1C4C	A12	N/A	NOT USED FOR SA/USED TO TUNE RTC OSC. ON A12
12	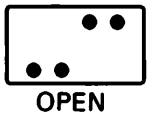 OPEN	0411	A11 A13	LOOP 12a, 12a:15, 12b, 12b:15	SYSTEM ACCESS OF A13 RAM
13	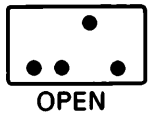 OPEN	C0PC	A13	LOOP 13a	TEST PATTERN FOR A13 RAM AND EXTERNAL CHAR. ROM
14	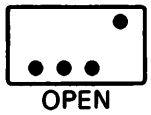 OPEN	70HA	A11	N/A	USED TO VERIFY START/STOP BITS (ST2 AND SP2) FOR SA PRO-GRAM LOOPS
15	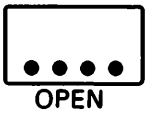 OPEN	N/A	A10,A11, A12,A13	N/A	ALL CIRCUITS EXERCISED DURING S406 POSITIONS 1-12

RECEIVER PROCESSOR FREE RUN AND SA PROGRAM LOOPS (Cont'd)

A8 SA Program Loop A	A8	A10/A8 interface Address decoder Address comparator Input control latch
A8 SA Program Loop B	A8	Input latch for data transients
A8 SA Program Loop C	A8	Input latch for data transients
A1 SA Program Loop A	A1	A10/A1 interface Address decoder Address comparator Data bus decoder
A2 SA Program Loop A	A2	A10/A2 interface Address comparator Input control latch
A3 SA Program Loop A	A3	A10/A3 interface Address comparator Address decoder Input control latch
A4 SA Program Loop A	A4	A10/A4 interface Address comparator Address decoder Input control latch Input data latches
A5 SA Program Loop A	A5	Programmable counters Data latches Comparator circuit Control status latch Counter mode counter
A5 SA Program Loop B	A5	A10/A5 interface Address comparator Address decoder Control latches
A6 SA Program Loop A	A6	A10/A6 interface Address comparator Address decoder Input control latch
A7 SA Program Loop A	A7	A10/A7 interface Address comparator Address decoder Input control latch

TROUBLESHOOTING EXAMPLE

SYMPTOM: Error code 003 is displayed at power-on.

FAILURE: Open address bit to Bank 1 ROM due to bad IC socket.

APPROACH: Use the 8-9. POWER-ON SELF CHECK TROUBLESHOOTING table, "error codes are displayed", step 1. and look up error code 003. This error code is referenced as a "SYSTEM" error, and corresponds to A12 Bank 1 ROM U300. "Error codes 0xx- 6xx" indicates that the +5 volt signatures of Section 8-15. need to be taken for "SYSTEM" errors. When this is done, the signature for 5406 position 5 will be the first + 5 volt signature to fail. Both SA Program loops 5 and 5:15 exercise A12 Bank 1 and Bank 2. If Bank 1 is failing, as indicated by the error code, SA program loop 5 will be looping on the Bank 1 ROM, and Bank 2 will never be enabled. This can be verified when using loop 5 by qualifying on the Bank 2 enable, U400-20. If Bank 2 is not being enabled the + 5 v reference for U400 will be bad. Bank 2 signatures can not be taken in loop 5 while the test is looping on Bank 1. Bank 1 signatures should be taken, however, to see if a single data bit output is bad, or if all outputs are bad. In this case, all of the data bit outputs would be bad. Loop 5:15 could be used to check Bank 1 and Bank 2 without looping on failure. This would give confidence that the problem is solely on the Bank 1 ROM. Several conclusions can be drawn at this point. If in loop 5:15, all of the Bank 2 signatures are good, the A12 address bus must be good to Bank 2. Also, because the + 5 volt signatures of Section 8-15. give a go/no go indication of the SA program loops, and are taken sequentially, we can conclude then, that the address bus to the MAIN ROM, U100 and U200, must also be good. The address bus to Bank 1 should be checked, however. This can be done by using the A12 Free Run loop A. In this loop the address bus signatures are taken at the A12 Address Buffer outputs. Even if signatures are good at these points (as they would be in this example) the signatures should also be taken directly at the Bank 1 address pins to verify continuity. This is where the problem would be located in this example.

This example should show that it is sometimes neccessary to alternate between using the Free Run loops (to verify addressing and decoding), the SA program loops (to check a particular part that is looping on failure), and the SA program position 15 counterpart loops (to check parts of a circuit without looping on fail).

NOTE: The above example is intended to be used in conjunction with the SYSTEM PROCESSOR SA THEORY found in Section 8-14. in order to stress the loop on fail nature of some of the SA Program loops.

8-16. SYSTEM PROCESSOR SA TABLES (A11, A12, A13)

Table 8-1. A11 Free Run Loop A (2.0 SOFTWARE)

SIGNATURES TAKEN ON : A11

Test Conditions: Set A11TP2 to FREERUN and remove A11JU602

Signature Analyzer Connections on A11:				Checks:
START	ST1	TP1-3	Rising	System Processor,
STOP	SP1	TP1-4	Rising	Address Bus,
CLOCK	CLK1	TP1-1	Rising	Decode Circuitry

+5 v reference = 0003 *= Not blinking

U301 - 6 = 37C6	U800 - 9 = U628	
	10 = 1745	
U402 - 8 = 8P4F	11 = 817C	
11 = 9842	12 = 8H45	
	13 = 5652	
U500 - 4 = 3838	14 = 32U8	
6 = 160H	15 = P3C9	
7 = 04UU		
9 = 04HU	U801 - 3 = 0002	
10 = F077	5 = 4868	
	7 = 6U28	
U501 - 6 = 4H7C	9 = 6321	
8 = F4AC	12 = 7791	
	14 = 37C5	
U502 - 4 = 0PP7	16 = 4FCA	
6 = 0P20	18 = 9UP1	
7 = 8CU2		
9 = A838	U802 - 3 = U759	
10 = F5P6	5 = 1U59	
11 = CF87	7 = 8484	
12 = HU5A	9 = UUUU	
	12 = FFFF	
U602 - 7 = 2302	14 = P763	
13 = 64HF	16 = 0356	
14 = 29A4	18 = 6F9A	
15 = 5FUA	U804 -14 = 0003*	

Table 8-2. A11 Free Run Loop B (2.0 SOFTWARE)

SIGNATURES TAKEN ON : A11

Test Condition: Set A11TP2 to FREERUN and remove A11JU602

Signature Analyzer Connections on A11:				Checks:
START/STOP	ST1	TP1-3	Rising/Rising	System ROM
QUALIFIER	U604-18	CE	Low Level	Data bus
CLOCK	CLK1	TP1-1	Rising	

+5 v reference = P254

U604 - 9 = 7UAC
10 = CHUU
11 = HUC0
13 = 0U53
14 = 789F
15 = 653F
16 = 8P91
17 = 51CU

Table 8-3. A12 Free Run Loop A (2.0 SOFTWARE)

SIGNATURES TAKEN ON : A12

Test Condition: Set A11TP2 to FREERUN position and remove A11JU602

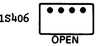

Signature Analyzer Connections on A11:				Checks:
START	ST1	TP1-3	Rising	System Data Bus,
STOP	SP1	TP1-4	Rising	System Address Bus,
CLOCK	CLK1	TP1-1	Rising	Control Lines

+5 v reference = 0003 * = Not blinking

A12TP3 -	U508-2 = 1FH9	U702-3 = 9UP1	
LRTC = 5652	3 = 1FHA	5 = 4FCA	
LDTE = 52CH	6 = 0000	7 = 37C5	
6000 = 1182	8 = 0000*	9 = 7791	
CMOS = 9842	9 = 0003*	12 = 6321	
CIRQ = 0003*	11 = 0000*	14 = 6U28	
VSTB = 0003*		16 = 4868	
PWDN = 0003*	U606-9 = FHAC	18 = 0002	
	10 = 5FUA		
U208-3 = 9841	13 = 0003*	U703-3 = U759	
4 = 04UU		5 = 1U5P	
6 = 04UF	U607-1 = 9851	7 = 8484	
8 = 04UU	2 = 9842	9 = UUUU	
	4 = 04UU	12 = FFFF	
U406-3 = 0003*	5 = 5652	14 = P763	
6 = 1FHA	6 = 52CH	16 = 0356	
8 = F735		18 = 6F9A	
	U608-1 = 1183	U707-1 = 0003*	
U407-4 = 1FHA	2 = C9U1	5 = 0003*	
5 = F735	3 = A871	6 = 0003*	
6 = U1FP	4 = 534H	11 = A98A	
7 = 7F70	5 = F9CF	12 = 4P23	
	6 = 9AU2	15 = 2302	
U408-4 = 0003*	8 = 5993		
	9 = 0003*		
U506-4 = 0000	10 = 5993		
6 = 0003			
8 = 0003*	U700-3 = 0000		
11 = 0000*	5 = 0003*		
13 = 0003*	7 = 0003*		
	9 = 0003*		
	12 = 0000		
	14 = 0003*		
	16 = 0003		
	18 = 9842		

Table 8-4. A13 Freerun Loop A (2.0 SOFTWARE)

SIGNATURES TAKEN ON : A13

Test Condition: Set A11TP2 to FREERUN position and remove A11JU602

A11S406 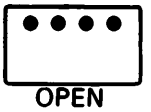 Position 0

OPEN

Signature Analyzer Connections on A11 and A13:

					Checks:
START	A11	ST1	TP1-3	Rising	System access
STOP	A11	SP1	TP1-4	Rising	of A13
CLOCK	A13	U702-21		Falling	

+5 v reference = 0003

U400-5 = 4FC9
7 = 4FC9
9 = 3F45
11 = 3F45
12 = 6U28
14 = 6U28

U601-4 = 1A05
6 = 84HH

U801-7 = 37C5
9 = 7791
12 = 6321

U802-4 = 0356
7 = 1U5P
9 = 6F9A
12 = U759

U803-4 = P763
7 = FFFF
9 = UUUU
12 = 8484

Table 8-5. SA Program Loop 1 (2.0 SOFTWARE)

SIGNATURES TAKEN ON : A11

Test Conditions: Set A11TP2 to NORMAL position and remove A11JU602

A11S406 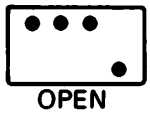 Position 1

OPEN

Signature Analyzer Connections on A11:

				Checks:
START	ST2	TP1-7	Rising	System ROM Data Bus
STOP	SP2	TP1-8	Falling	
CLOCK	CLK1	TP1-1	Rising	

+5 v reference = 6324, $\overline{MR}$/W U701- 34 = H126

U604 - 9 = F0AB
10 = 9461
11 = HH44
13 = A35U
14 = P551
15 = FPF1
16 = C4U7
17 = AA2P

Table 8-6. SA Program Loop 2 (2.0 SOFTWARE)

SIGNATURES TAKEN ON : A11

Test Condition: Set A11TP2 to NORMAL position and remove A11JU602

A11S406 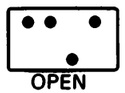 Position 2

Signature Analyzer Connections on A11:

				Checks:
START/STOP	ST2	TP1-7	Rising/Falling	A11 System RAM
QUALIFIER	As noted below		Low Level	
CLOCK	CLK1	TP1-1	Rising	

Note: Cycle power when changing qualifier

Qualifier= U204-18	Qualifier= U404-18
+5 v ref.= C7U8	+5 v ref.= 0494
U204 - 9 = 1UF5	U404 - 9 = 690U
10 = U39U	10 = 3F69
11 = 7060	11 = UU0U
13 = 52P6	13 = 28HU
14 = A3F6	14 = C64U
15 = 0588	15 = 130A
16 = 856U	16 = 55U2
17 = HF5H	17 = PC6A

Table 8-7. SA Program Loop 2:15 (2.0 SOFTWARE)

SIGNATURES TAKEN ON : A11

NOTE: Signatures take approximately 30 seconds to stabilize

This test is for U204 only.

Test Condition: Same as for loop 2 except:

A11S406 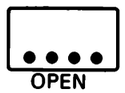 Position 15

Signature Analyzer Connections on A11: Same as for loop 2

Qualifiers= Same as for loop 2

Signatures= same as for loop 2

Table 8-8. SA Program Loop 3a (2.0 SOFTWARE)

SIGNATURES TAKEN ON : A11

Test Conditions: Set A11TP2 to NORMAL position and remove A11JU602

A11S406 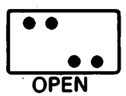 Position 3

Signature Analyzer Connections on A11:				Checks:
START	ST2	TP1-7	Rising	Bank Select Clock,
STOP	SP2	TP1-8	Falling	LED Driver Circuitry,
CLOCK	CLK1	TP1-1	Rising	Graphics RAM (A13) enable

+5 v reference = C6FF

U301 - 1 = 2165	U703 - 2 = 6A4C	U706 - 3 = 0426
2 = 97A9	3 = P4F7	5 = 566C
3 = 97A9	4 = U3AU	7 = 9FAF
4 = 2165	5 = 9F51	12 = 9F51
	6 = 0426	14 = U3AU
U401 -12 = C9PF	7 = 566C	16 = P4F7
	8 = 9FAF	18 = 6A4C

Table 8-9. SA Program Loop 3a:15 (2.0 SOFTWARE)

SIGNATURES TAKEN ON : A11

NOTE: Signatures take approximately 30 seconds to stabilize

Test Conditions: Same as for loop 3a except:

A11S406 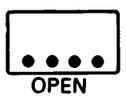 Position 15

Signature Analyzer Connections on A11: Same as for loop 3a

+5 v reference = CU26

U301 - 1 = A2FC	U703 - 2 = 35C7	U706 - 3 = U541
2 = 1HPH	3 = 63U7	5 = 2589
3 = 1HPH	4 = P3H1	7 = 8030
4 = A2FC	5 = 2P96	12 = 2P96
	6 = U541	14 = P3H1
U401 -12 = 7308	7 = 2589	16 = 63U7
	8 = 8030	18 = 35C7

Table 8-10. SA Program Loop 3c (2.0 SOFTWARE)

SIGNATURES TAKEN ON : A13

Test Condition: Set A11TP2 to NORMAL and remove A11JU602

A11S406 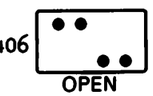 Position 3

Signature Analyzer Connections on A11 and A13:					Checks:
START/STOP	A11	ST2	TP1-7	Rising/Falling	CRTC
QUALIFIER	A13	U702-25	CS	Low Level	
CLOCK	A11	CLK1	TP1-1	Rising	

+5 v reference=5669 * = Not blinking

U702-19 = 0000*	U702-28 = 0257
21 = 0000	29 = 95P8
22 = PP2U	30 = 446U
23 = 5669	31 = C0C8
24 = 683H	32 = 8567
26 = 0000	33 = H97C
27 = 0009	

Table 8-11. SA Program Loop 3c:15 (2.0 SOFTWARE)

SIGNATURES TAKEN ON : A13

NOTE: Signatures take approximately 30 seconds to stabilize

Test Condition: Same as for loop 3c except:

A11S406 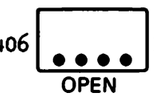 Position 15

Signature Analyzer Connections on A11 and A13: Same as for loop 3c

Signatures = same as for loop 3c

SECTION VIII
SERVICE

8-1. INTRODUCTION

This section contains theory of operation, troubleshooting, component locators and schematic diagrams. This section is divided into the functional parts of the 4945A.

8-2. SAFETY CONSIDERATIONS

This section contains warnings and cautions that must be followed for your protection and to avoid damage to equipment. Read the safety summary at the front of this manual and all warnings given at the beginning of procedures, prior to servicing.

8-3. GRID LOCATORS

The 4945A printed circuit boards use a grid system for locating integrated circuits. The reference designator for a particular IC is also its location on the PC board. For example, U103 is located vertically in the 100 row and horizontally in the third column (see the example grid locator below). Basically, all the dualinline-package ICs and the single-inline-package devices such as resistor packs have reference designators that correspond to grid locations on the PC board.

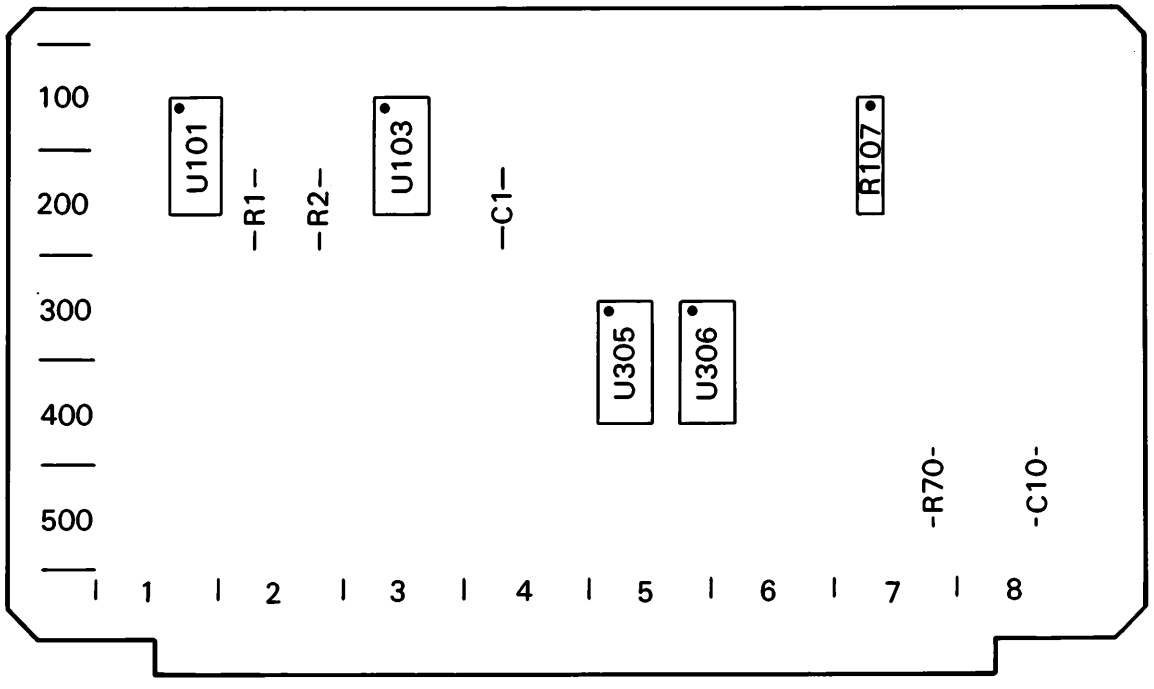

Figure 8-1. Example Grid Locator

Descrete components such as resistors, capacitors and inductors are numbered sequentially for reference designators, starting from the upper left corner of the PC board and going across the board and down to the lower right corner of the board.

Component locators for the PC boards are shown by the schematic diagram for that board.

8-4. LOGIC SYMBOLOGY

The 4945A schematics are drawn using logic symbology described in ANSI standard Y32.14 and IEEE standard 91. The symbols are drawn to show circuit function. For example; if a NOR gate is used to AND together two, low true signals, the schematic shows the AND symbol even though the physical part is a NOR gate. The polarity convention (small right triangle) is used to indicate the active low states of logic functions.

Symbol Composition

A symbol comprises an outline or a combination of outlines together with one or more qualifying symbols and the representation of input and output lines. Figure 8-2 shows examples of some of the more complex symbols used in the schematics. All the major parts of the symbol are pointed out.

The two main parts of a symbol are the control block and the array elements. Notice that not all symbols have a control block even though there are control signal inputs.

All inputs and dependency notation in the control block affect the array elements directly. Common outputs are located in the control block.

All array elements are controlled by the control block as a function of dependency notation. Any array element is independent of all other array elements. Unless indicated, the least significant element is always closest to the control block. Some array elements are arranged by binary weight, indicated by powers of 2.

Inputs are located on the left side of the symbol and are affected by their dependency notation. Outputs are located on the right side of the symbol and are affected by dependency notation.

Dependency notation is read from left to right. Dependency notation indicates the relationship between inputs and outputs. Signals having a common relationship have a common number.

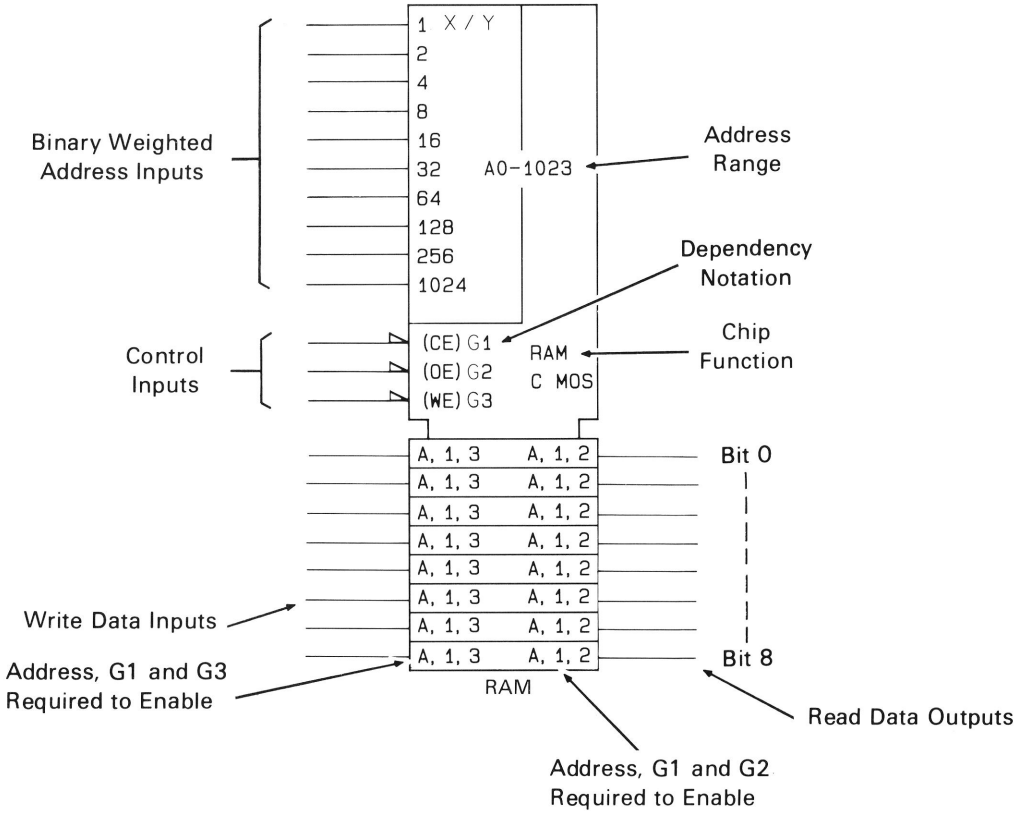
1 X / Y
2
4
8
16
32
64
128
256
1024
A0-1023
Binary Weighted
Address Inputs
Address
Range
Dependency
Notation
(CE) G1
(OE) G2
(WE) G3
RAM
C MOS
Control
Inputs
Chip
Function
A, 1, 3
A, 1, 2
Bit 0
Bit 8
Write Data Inputs
Address, G1 and G3
Required to Enable
RAM
Read Data Outputs
Address, G1 and G2
Required to Enable

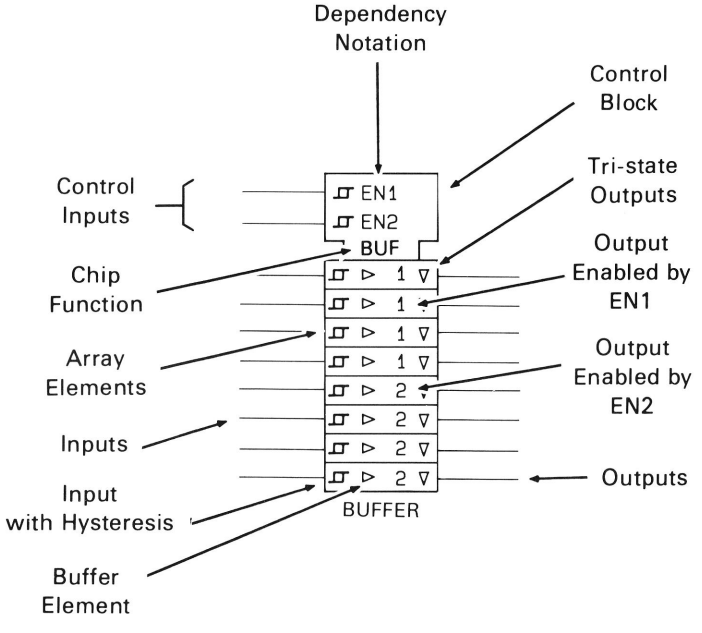
Dependency
Notation
Control
Block
EN1
EN2
BUF
Control
Inputs
Tri-state
Outputs
Chip
Function
Output
Enabled by
EN1
Array
Elements
Output
Enabled by
EN2
Inputs
Outputs
Input
with Hysteresis
Buffer
Element
BUFFER

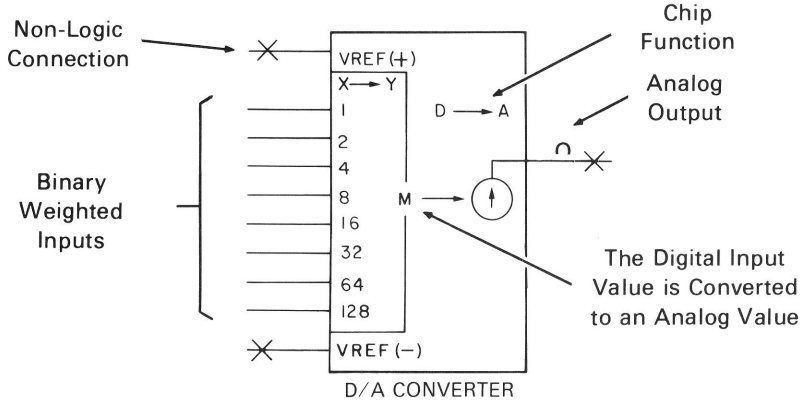

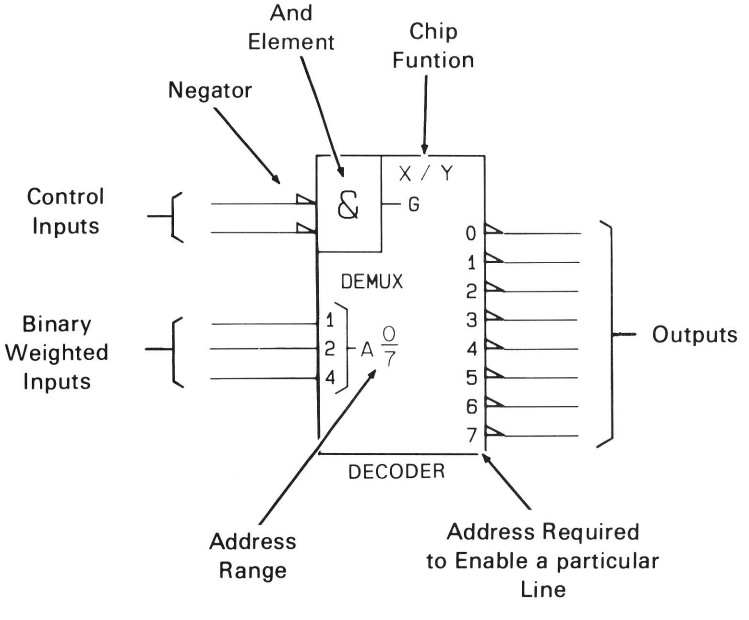

Figure 8-2. Logic Symbology Examples

8-5. TRANSMISSION IMPAIRMENT MEASUREMENTS

Introduction

Units commonly used in transmission testing are the dB, dBm and dBrn.

The decibel (dB) is the historical measurement unit for telecommunications because of easy mathematics and the response of the human ear to volume changes is logrithmic. The difference between two power levels can be expressed in dB as:

$$dB = 10\log \frac{P1}{P2}$$

The difference between two voltage levels or current levels can be expressed in dB as:

$$dB = 20\log \frac{V1}{V2} \text{ (for voltage) and } dB = 20\log \frac{I1}{I2} \text{ (for current)}$$

When one of the power levels is a known standard (1 milliwatt) the term dBm is used. Power referenced to 1 milliwatt is expressed as:

$$dBm = 10\log \frac{P}{1 \text{ milliwatt}}$$

0 dBm = 1 milliwatt or 774.6 mV into 600 ohms

Power for noise tests is referenced to 1 picowatt and the term dBrn is used. Noise power referenced to 1 picowatt is expressed as:

$$dBrn = 10\log \frac{P}{1 \text{ picowatt}}$$

0 dBrn is equal to -90 dBm which is the noise floor reference.

Power ratios are valid for any load impedance, but voltage levels above and below the zero level must be referenced to the load impedance.

Level/Frequency

The level/frequency mode is the basic measurement of attenuation distortion. The received level is the power dissipated in a standard impedance by the received tone (in dBm). The loss of the circuit is expressed in dB and is the difference between the power from the source driving the circuit under test and the received level.

The transmission level at any point in a transmission circuit or system is the ratio of the signal power at that point to the signal power at a reference point called the zero transmission level point (0 TLP). Certain points in the telephone circuits have fixed TLPs. Transmission level points for voice frequency and data circuits at analog points in telephone circuits can vary from +13 TLP to -16 TLP. The TLP also affects the expected value for noise measurements, which are normally measured at 0 TLP. The term dBm0 (dBm at 0 TLP) is the test signal power at any point on a circuit referred to as 0 TLP.

Received Signal Flow

The input signal at the Tip and Ring terminals on the front panel is connected to A58 which contains switching relays and protection devices. From here the signal is routed to the input board A1. During level/frequency mode, the differential amplifier on A1 is used to provide signal balance to ground, and rejection of common mode signals present on the line under test. The signal then goes to the filter board, A2. Here the 10 kHz lowpass and 60 Hz high-pass filters (when selected) remove unwanted high-frequency noise and low frequency hum from the signal. 10 dB of gain is used when the signal level is below about -35 dBm. The signal then goes to the autorange amplifier board, A4, where from -10 dB to 60 dB of gain is used to bring the signal to a level where the detectors can function accurately. Before going to the detector board, the signal is bandlimited by a sixth order, Butterworth filter with a 140 kHz cutoff. This eliminates excessive noise and stabilizes the autorange amplifier. On the detector board A5, in level/frequency mode only the full wave average, wideband detector is used. The average responding detector has noise rejection superior to a rms detector. This detector provides a dc voltage output which is measured by the analog to digital converter on the detector board. This voltage reading is corrected in software for the gain and dc offset present in the detector circuit, and is also corrected for gain of the autorange amplifier and the selected termination impedance. The reading is sent to the system processor via shared memory for the display or I/O.

Peak-to-Average Ratio (P/AR)

The peak-to-average measurement evaluates the simultaneous effects of envelope delay distortion, bandwidth reduction and poor return loss (gain and phase ripples) on voiceband data signals.

A transmitter and a receiver are connected to opposite ends of a voiceband transmission channel. The transmitter generates a precisely controlled complex pulse train of known peak-to-average ratio through the system. The pulses are dispersed by the distortion they encounter. The receiver measures the absolute peak and the full-wave rectified average values of the pulse train and displays the ratio of these values. A value of 100 indicates no pulse train degradation. The P/AR measurement is mostly insensitive to noise and nonlinear distortion, and unaffected by frequency shift or transients.

Received Signal Flow

The input signal is applied to the Tip and Ring terminals on the front panel and then goes through the input board (A1). No gain is used on A1. Next, the signal goes to the filter board (A2). The 10 kHz and 60 Hz filters are not used here as the P/AR filter provides rejection of hum and noise. The signal is weighted by the P/AR filter on A2. There is no gain before the P/AR filter. The weighted signal is applied to the narrowband autorange amplifier on A4. This amplifies the signal large enough for the detectors to function accurately. Next, the signal goes to the narrowband peak and average detectors on A5 which measure the signal. These detectors have very low offsets necessary to measure the P/AR value. The output of this circuit is applied to the analog to digital converter circuit which then makes the true average and true peak readings. The gain and dc offset of the hardware circuit are corrected out in software, and then the software computes the P/AR value, passing it to the system processor for display and output to the I/O.

Transmitter Signal Flow

The transmitter waveform for P/AR is complex, consisting of 16 frequencies at specific levels and phases. The transmit signal frequency spectrum is shown in Figure 8-3. The transmit signal envelope is shown in Figure 8-4.

The P/AR waveform is generated on the A15 board, goes through the A17 board and output through A18.

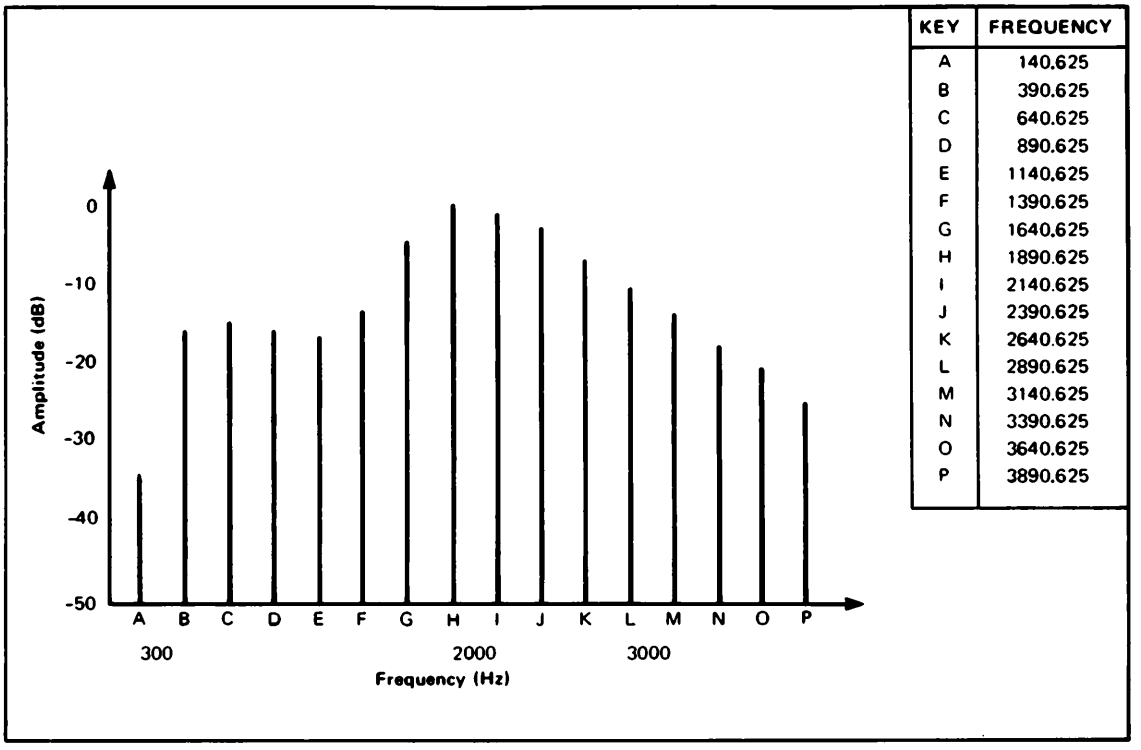

KEY	FREQUENCY
A	140.625
B	390.625
C	640.625
D	890.625
E	1140.625
F	1390.625
G	1640.625
H	1890.625
I	2140.625
J	2390.625
K	2640.625
L	2890.625
M	3140.625
N	3390.625
O	3640.625
P	3890.625

Figure 8-3. P/AR Transmit Signal Frequency Spectrum

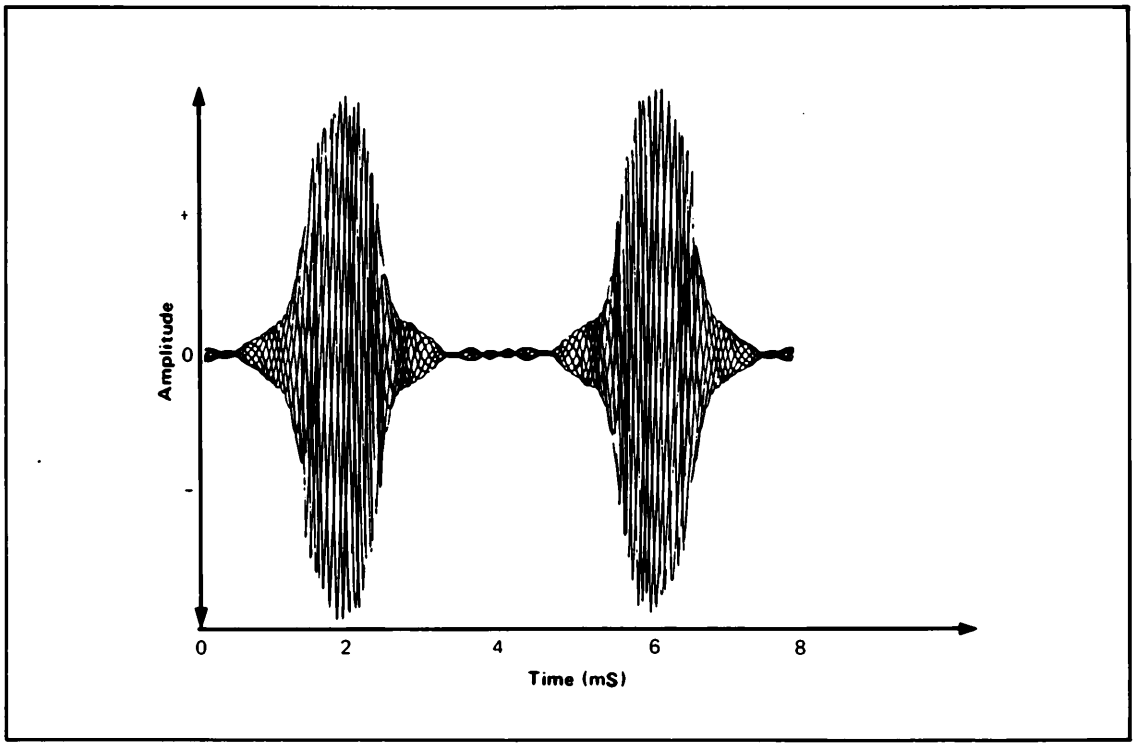

Figure 8-4. P/AR Transmit Signal Envelope

Phase Jitter

Phase jitter measurements indicate the cumulative effect of incidental phase modulation (PM) and additive tones or noise on the phase of a holding tone. The peak-to-peak phase deviations of the received signal are detected after band limiting to reduce the effect of additive noise. The most common single-frequency components of phase jitter are 20 Hz (ringing current), 60 Hz (commercial power) and the second through fifth harmonics of these. A bandwidth of 600 Hz centered about a 1 kHz carrier is sufficient to cover the major suspected sinusoidal PM without incurring large amounts of uncorrelated interference. Since noise can appear to be a source of phof phase aitter, a C-message noise measurement should be made in conjunction with this measurement. Incorrect low phase jitter readings result if a 1 kHz carrier is used on a pulse code modulation system (PCM) with an 8 kHz sampling rate. There are also instances of phase jitter in the region from 4 Hz to 20 Hz.

Amplitude Jitter

Amplitude jitter measurements indicate the cumulative effect of incidental amplitude modulation and additive tones or noise on the holding tone envelope. Peak-to-peak envelope deviations of the received signal are detected after band limiting to reduce the effect of additive noise. The most common single-frequency components of amplitude jitter are 60 Hz (commercial power), 20 Hz ringing and the associated second through fifth harmonics. A bandwidth of 600 Hz centered about a 1 kHz carrier is sufficient to cover the major suspected amplitude jitter without large amounts of interference.

Since group delay distortion and frequency response of a channel can cause amplitude jitter to be created from phase jitter, and vice versa, it is recommended that amplitude jitter be measured in conjunction with phase jitter. These two measurements can be an effective tool in the diagnosis of channel impairments.

Since noise can appear to be a source of amplitude jitter, a C-message noise measurement should be made in conjunction with this measurement. Incorrect low amplitude jitter readings result if a 1 kHz carrier is used on a pulse code modulation system (PCM) with an 8 kHz sampling rate. There are also instances of amplitude jitter in the region from 4 Hz to 20 Hz.

Transients

There are two classes of transient phenomena in telephone circuits: impulse noise and rapid changes in phase or gain (including signal loss). Impulse noise is a large excursion of a received signal level that is not correlated with the transmitted signal (if any) and is higher than the normal peaks of the message circuit noise. A rapid change in phase is called a phase hit. A rapid change in gain is called a gain hit. The phase or gain measurement may stay at its new value or return to the original value some time later.

A dropout occurs when the loss on the circuit increases by 12 dB or more compared to the level at the start of the measurement interval. During a dropout, the noise may increase to a level near the original received signal level.

For impulse noise, the holding tone is either notched out or not used at all. A 1 kHz holding tone is used to measure phase and gain hits and dropouts. The phase and level of the holding tone are monitored for changes exceeding preset thresholds. The counts of transients exceeding thresholds are accumulated and displayed.

Noise and Signal-to-Noise Ratio

Noise may be measured either with or without a holding tone present. If no holding tone is present, the background noise, or idle channel noise is measured to a "quiet" termination (normally 600 or 900 ohm resistive termination). The rms noise power is measured through an appropriate weighting network. If a holding tone is used, the noise-with-tone measurement is made with a transmitter output impedance of 600 or 900 ohms and an output frequency between 1002 Hz and 100 Hz. The output level should be appropriate be appropriate to the system under test. The rms noise power is measured with a weighting network after rejection of the holding tone with a sharp notch filter (notched noise or noise with tone measurement). The displayed reading for notched noise is the summation of noise on the circuit which is not a function of the holding tone plus any harmonic distortion or quantizing noise which is a result of the holding tone.

Noise-to-ground measurements evaluate the longitudinal (common mode) voltage present on a circuit. A longitudinal holding tone or notch filter is not necessary. Noise-to-ground measurements are normally not made where a low impedance to ground is present.

Noise power is measured in dBrn referenced to a picowatt as given by the formula:

$$N \text{ (in dBrn)} = 10 \log (10^{12} P)$$

where N is the displayed noise reading and P is the power in the received signal in watts.

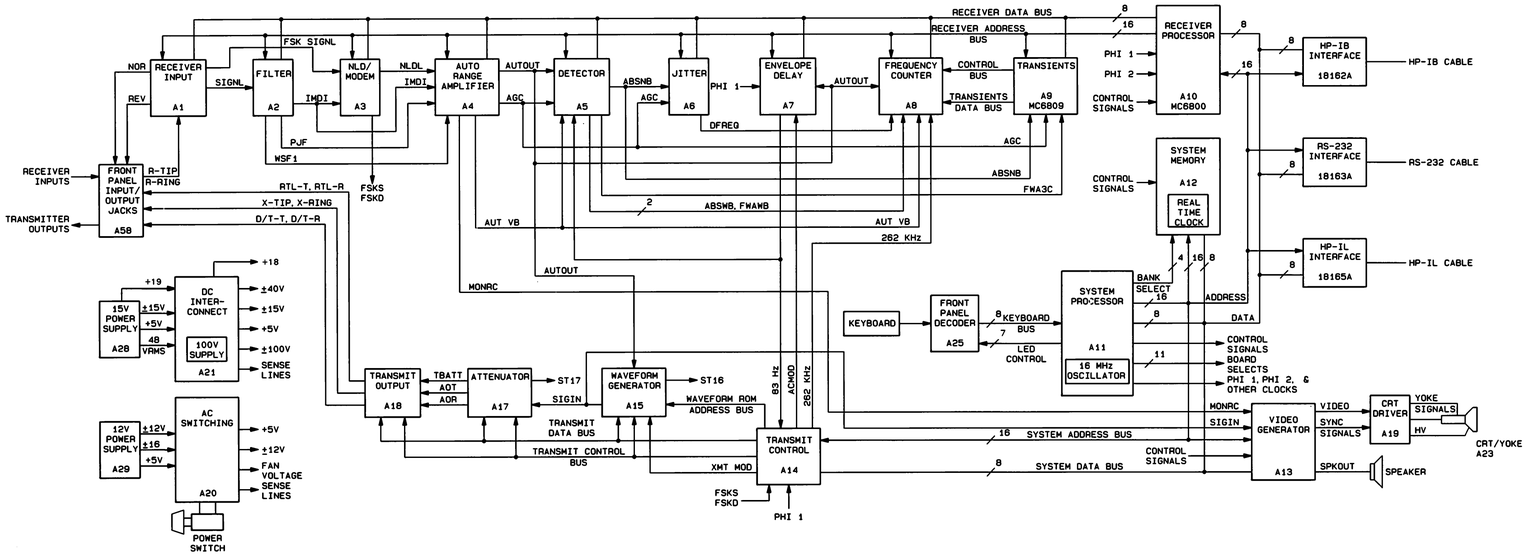

Figure 8-5. 4945A Block Diagram

Envelope Delay Distortion

Common methods of envelope delay distortion (EDD) measurement are based upon measuring the time shift of low-frequency modulation placed on a carrier relative to the modulation placed on a reference frequency carrier or relative to the original modulation. The North American method uses a separate reference path except for the special case of loop-around measurements. In this case, the original modulation source itself serves as reference. The CCITT method uses an alternate measure-reference carrier frequency to time share the measure and reference carriers. No separate reference channel is required. The CCITT modulation frequency is 41 2/3 Hz, whereas the North American method uses 83 1/3 Hz with some instances of 25 Hz and other frequencies being used.

Aside from differences in modulation frequencies, the technical and operational differences between the North American and CCITT methods are so great that they are incompatible.

Return Loss

Return loss is the ratio, in decibels, of the power incident upon a transmission system discontinuity to the power reflected from the discontinuity. Return loss measurements are made on both 2-wire and 4-wire circuits. The measurement indicates how well the input and output impedances are matched throughout a circuit.

Return loss measurements require a quiet termination at the distant end of the circuit.

The result of a single frequency return loss measurement must specify the measurement frequency. Return loss as a measure of impedance match is usually specified as the minimum for any frequency within a specified band.

Average return loss over a specified band of frequencies may be measured using a sweep frequency. The average return loss over the band is a power average.

Echo return loss (ERL) and singing return loss (SRL) are band averaged

Intermodulation Distortion

Intermodulation distortion (IMD) can be broadly defined as the generation of signal components from the transmitted signal that add to the transmitted signal, usually in an undesired manner. Second and third order products are usually the most significant. IMD is also known as Non-Linear Distortion (NLD).

The test signal used consists of four, equal-level tones. Two of the tones are 6 Hz apart centered at 860 Hz and the other two are 16 Hz apart centered at 1380 Hz. The total power nominally due to the six, third order intermodulation products in a narrow band centered at 1.9 kHz is measured and expressed in dB below the received signal. The power nominally due to the four, second order intermodulation products in a narrow band centered at 520 Hz and at 2240 Hz are also measured. These two second order distortion product powers are then averaged and the result expressed in dB below the received signal.

Crosstalk

Crosstalk is measured with a sinusoidal test signal driving one circuit and the received level measured on a second parallel circuit. Crosstalk coupling is expressed in dB and is the difference between the transmitted level in one circuit to the received level in another circuit. Measurements are usually made at impedances of 600 or 900 ohms.

8-6. SERVICE SHEET ORGANIZATION

The 4945A has been broken down into sections. Each section has its own tab divider and includes the theory of operation, block diagrams and schematics associated with that section.

Figure 8-5 is the 4945A Block diagram which shows the various instrument sections and the boards associated with each section.

8-7. BLOCK DIAGRAM DESCRIPTION

Figure 8-5 is a block diagram of the 4945A showing how the PC assemblies interact with each other. The different sections of the instrument are defined on the figure. Refer to the 4945A Block Diagram and the individual board block diagrams when reading this description.

Processor and Memory Interaction

The 4945A is a microprocessor controlled TIMS. Operator inputs from the keyboard are decoded on A25 and sent to the System Processor (A11) where the appropriate action is initiated. To initiate any action, the system processor accesses the appropriate software routine in its own ROM or in the system ROM on A12. The commands in the ROM routine then cause the instrument to be configured or a measurement to be taken, etc.

Besides communications with the RAM and ROM on A12, the system processor can address the receiver processor (A10), the video generator (A13), the transmitter control (A14) and the I/O interfaces. Once the system processor properly addresses any one of these, it can send and receive data on the system data bus.

A battery on A12 provides backup power to the real time clock and part of the A12 RAM. This preserves time and date information, the last receiver calibration constants and the last instrument setup.

All the system clocks are generated on A11 and distributed to the other 4945A sections. PHI 1 and PHI 2 are the main system clocks.

Network Connections

The 4945A is connected to the network under test via either the binding post connectors or the Western Electric 310 connectors on the front panel. The connectors are connected to the A58 board. Two relays on A58 lets you reverse the transmit and receive connectors. Both the transmitter and receiver are equipped with holding circuits for latching telephone switching equipment. These are located on A1 and A18. The output impedance of the transmitter and receiver is selectable at either 135, 600, 900, or 1200 ohms. The receiver input can be bridged if a termination is provided by another device.

Power Supplies

The 4945A has two main supply assemblies; the +-12 volt (A29) and the +-15 volt (A28). These two supplies are basically the same with some component differences to give the 3 volt difference. Both supplies provide some of the required +5 volt current.

The ac line input goes through the normal line filtering, range selection and fuse before going to the power switch on A20. From A20 the switched ac is applied to A28 and A29. The output voltages from A28 and A29 are distributed within the instrument via A20 and A21. The +-40 volts and +-100 volts are generated on A21.

Display

The 4945A uses a magnetically-deflected, raster scanned cathode ray tube for the display. The display is controlled by the system processor (A11). Information to be displayed is sent to the video generator (A13) where it is decoded into character and attribute (special feature) information. A13 has enough memory to store one complete screen of information. The CRT controller handles all the timing considerations in getting the information to the display. The outputs of the A13 board are the serial video bit stream, vertical sync and horizontal sync.

A13 also contains the beep oscillators and the audio control/ amplifier circuits. The audio output is sent to the loudspeaker on the rear panel.

The output signals from A13 are applied to the CRT driver (A19). The horizontal sync signal is confirmed to be 20 kHz, and then shaped to drive the horizontal deflection circuit and the high voltage circuit. The vertical sync is also shaped and passed on to the vertical deflection circuit. Both deflection circuits provide dc centering and size adjustments in addition to amplifying the sync signals to drive the deflection yoke coils. The vertical deflection circuit also has a linearity control. The high voltage circuit provides all the operating voltages for the CRT and the video amplifier. The video signal is amplified before going to the CRT cathode.

Transmitter

The transmitter has four pc boards (A14, A15, A17 and A18). The transmitter control board (A14) controls the transmitter (i.e., frequency, level, termination, etc.) and A14 is controlled by the system processor (A11). Whenever an instrument setup requires a transmitter output, the system processor sends the data to A14 on the system data bus. Here is a description of the basic transmitter signal flow.

Frequency information is stored in a frequency register and an adder, from which a waveform ROM address bus is created. This bus carries a digital representation of the desired frequency or frequencies to A15. On A15, the waveform ROM address bus is applied to two waveform ROMs. The ROM output is sent to a digital-to-analog converter where the digital information is converted to the appropriate analog signal. This can be either a single or multi-tone signal. The transmitter signal can go through a filter and a fine attenuator before going to A17 as the SIGIN signal.

On A17, the transmitter signal (SIGIN) goes through an attenuator and an amplifier before it is split into a balanced signal. The balanced signal is isolated and amplified before going to A18 on the tip and ring lines (AOT, AOR).

On A18, the output impedance is selected and the transmitter hold coil can be selected. The transmitter signal then goes directly to the front panel connectors and to the network under test.

That's the basic transmitter signal flow.

Signal level information is also sent to A14 on the system data bus. This information is distributed on the transmitter data bus to the attenuators on A15 and A17.

Other control information from the system processor also goes on the transmit data bus where it is decoded by the control register on the appropriate board.

Receiver

The receiver is the most complex part of the 4945A. There are nine boards in the receiver. Some of the boards are used all the time and others are used only part of the time, depending on the measurement being made. Measurements are made in the receiver and the results are sent to the shared RAM. The system processor takes the data from the shared RAM and sends it to the display, the I/O or a remote unit. Receiver setup is initiated by the system processor and carried out by the receiver processor (A10). The receiver processor is responsible for the receiver configuration and gathering the data from the various TIMS measurements. Here is a description of the receiver signal path for each of the measurements done by the 4945A.

Modem/FSK

The modem and FSK circuits are used in master/slave operation. Master/slave allows the 4945A to control and communicate with another 4945A, 4944A or 4943A. This communication takes place over the network under test; one unit is at each end of the line.

To send data to the other unit, the data is first sent to A14 on the system data bus. On A14, the data is converted to a serial bit stream by the ACIA chip and then modulated by the transmitter. The FSK signal follows the normal path through the transmitter to the output.

When FSK data is received, it goes through the differential amplifier on A1 and then directly to A3 on the FSK SIGNL line. On A3, this line goes through an AGC circuit, to an FSK filter where the 1990 Hz pilot tone is stripped off. The pilot tone goes to a pilot tone detector and the FSK signal goes to the FSK tone detector. The demodulated FSK signals and the pilot tone detect (FSKS and FSKD) are sent to the ACIA chip on A14. Here the data is read on the system data bus.

Level/Frequency Measurements

For this measurement, the transmitter outputs a specified single tone signal.

The input signal is routed to the input board A1. In level/frequency mode, the differential amplifier on A1 is used to provide signal balance to ground, and rejection of common mode signals present on the line under test. The signal then goes to the filter board, A2. Here the 10 kHz lowpass and 60 Hz highpass filters (when selected) remove unwanted high-frequency noise and low frequency hum from the signal. 10 dB of gain is used when the signal level is below about -35 dBm. The signal then goes to the autorange amplifier board, A4, where from -10 dB to 60 dB of gain is used to bring the signal to a level where the detectors can function accurately. Before going to the detector board, the signal is bandlimited by a sixth order, Butterworth filter with a 140 kHz cutoff. This eliminates excessive noise and stabilizes the autorange amplifier. On A5, the full wave average, wideband detector is used. The average responding detector has noise rejection superior to a rms detector. This detector provides a dc voltage output which is measured by the analog to digital converter. This voltage reading is corrected in software for the gain and dc offset present in the detector circuit, and is also corrected for gain of the autorange amplifier and the selected termination impedance. The reading is sent to the system processor via shared memory for the display or I/O.

Peak-to-Average Ratio

The transmitter transmits the complex P/AR waveform, consisting of 16 frequencies at specific levels and phases. The normal transmitter signal path is used.

The input signal goes through the input board (A1) with no gain and then goes to the filter board (A2) on the SIGNL line. On A2, the signal is weighted by the P/AR filter. There is no gain before the P/AR filter. The weighted signal is applied to the wideband autorange amplifier on A4 via the WFS1 line. This amplifies the signal large enough for the A5 detectors to function accurately. Next, the signal (AUTOUT) goes to the narrowband peak and average detectors on A5 which measure the signal. These detectors have very low offsets necessary to measure the P/AR value. To measure P/AR, the A5 A to D converter is set up as a peak detector and an average detector. The A5 comparator is sampled for the peak and average values, then the rms detector value is read. The P/AR value is computed by the receiver processor software (A10). The gain and dc offset of the hardware are corrected out by the A10 software, before the P/AR value is computed. The P/AR value is passed to the system processor via the shared RAM for display or I/or I/O.

Phase and Amplitude Jitter

For this measurement, the transmitter outputs a 1004 Hz signal.

The returned signal is input to A1 where the 20 dB amplifier is used if the signal is less than -20 dBm. From A1, the signal (SIGNL) goes to A2 where it goes through the 10 kHz low pass filter and the phase jitter filter before going to A4 on the PJF line. On A4, the signal goes through the narrowband auto range amplifier. The signal goes to A8 for frequency measurement (AUT VB).

For amplitude jitter, the signal goes to A5 on the AGC line. On A5, the signal goes through the narrowband absolute value amplifier and then to A6 on the ABSNB line. The signal goes through either a 20 Hz or 4 Hz high pass filter depending on which measurement bandwidth has been selected. The amplitude jitter is measured on A6 and the result is sent to the receiver processor on the receiver data bus.

The phase jitter signal comes directly to A6 from A4 on the AGC line. The signal goes through either the 20 Hz or 4 Hz phase lock loop depending on which measurement bandwidth has been selected. The phase jitter is measured on A6 and the result is sent to the receiver processor on the receiver data bus.

On A5, the signal also goes through the full wave average narrowband detector for a level measurement (FWANB).

Phase Hits, Gain Hits and Dropouts

For these transient measurements, the transmitter outputs a 1004 Hz signal.

The returned signal is input to A1. The A1 attenuator or the A1 amplifier can be used depending on the level of the input signal. The signal goes to A2 on the SIGNL line. The signal goes straight through A2 without any filter weighting and out to A4 on the IMDI line. On A4, the signal goes through a bessel filter before going through the narrowband autorange amplifier and the fine attenuator. The signal leaves A4 on the AGC line.

For phase hits, the signal on the AGC line goes directly to the phase hit detector on A9. Phase hit information is returned to the receiver processor on the receiver data bus.

For gain hits and dropouts, the signal on the AGC line goes to A5 where the signal goes through the narrowband absolute value amplifier. For dropouts, the signal leaves A5 on the ABSNB line which goes to the dropout detector on A9. For gain hits, the signal goes through a 75 Hz bessel filter before leaving A5 on the FWA3C line. The FWA3C line goes to the gain hit detector on A9. Dropout and gain hit information is returned to the receiver processor on the receiver data bus.

Impulse Noise

When measuring impulse noise, the transmitter can be either transmitting a 1004 Hz signal or terminated with a quiet termination

The input signal to A1 goes through A1 with the possibility of 20 dB attenuation or the 20 dB amplifier switched in. The signal goes to A2 on the SIGNL line. On A2,the signal goes through the 1010 Hz notch filter and the weighting filter that has been selected, and then out to A4 on the WSF1 line. On A4, the signal goes through the wideband autorange amplifier and then out to A5 on the AUTOUT line. On A5, the signal goes through the wideband absolute value amplifier and then to A8 on the ABSWB line. The impulse noise detector is on A8. Impulse noise information is transferred to A9 on the transient data bus, then it is sent to the receiver processor on the receiver data bus.

Return Loss Measurements

For the sinewave return loss measurement, the transmitter outputs a signal between 200 Hz and 3904 Hz. For ERL, SRL-High and SRL-Low, a band-limited noisespectrum is used.

The returned return loss signal is input to A1. For two wire measurements, the return loss bridge on A18 is used and the 20 dB amplifier may be used. From A1, the signal goes to A2 on the SIGNL line. On A2, the signal goes through the 60 Hz highpass filter and the 10 kHz lowpass filter before going out to A4 on the WSF1 line. On A4, the signal goes through the wideband autorange amplifier before going to A5 on the AUTOUT line. On A5, the signal goes through the rms detector for a signal level reading.

Noise Measurements

For the message circuit noise and noise to ground measurements, the transmitter is quiet terminated. For the noise with tone and signal to noise measurements, the transmitter outputs a 1004 Hz signal.

The returned signal is input to A1 where the 20 dB amplifier can be used. The signal goes to A2 on the SIGNL line. On A2, the 1010 Hz notch filter is used to filter out the transmitter signal (for noise with tone and signal to noise measurements) so that background noise can be measured in the presence of a tone. The 10 dB amplifier may be used, depending on the signal level.

The phase jitter filter is used on the 1004 Hz tone while the noise is routed through the selected weighting filter. The noise signal goes to A4 on the WSF1 line. On A4, the noise signal goes through the wideband routed through the narrowband autorange amplifier. On A5, the noise component is measured with the rms detector and the tone (if used) is measured with the narrowband absolute value amplifier and the 5 Hz bessel filter.

Intermodulation Distortion

Inter-Modulation Distortion (IMD) is also referred to as Non-Linear Distortion (NLD). The transmitter outputs two tone pairs. Two tones are 6 Hz apart centered at 860 Hz and the other two tomes are 16 Hz apart centered at 1380 Hz.

The returned signal is input to A1 where the 20 dB amplifier can be used for autoranging. The signal goes to A2 on the SIGNL line. On A2, the signal goes through the 60 Hz highpass filter and the 10 kHz lowpass filter. Here the signal goes to two places.

For four-tone level measurement, the signal goes through the phase jitter filter and out to A4 on the PJF line. On A4, the signal goes through the narrowband autorange amplifier and then it goes to A5 on the AUTOUT line. On A5 it is measured with the narrowband absolute value amplifier and the 5 Hz bessel filter.

For the distortion product measurements, from the 10 kHz filter the signal goes to A3 on the IMDI line. On A3 the signal goes through notch filters which attenuate the four tones by about 30 dB. A30 dB amplifier then does autoranging on the distortion products. The distortion signal is sent through the appropriate distortion band weighting filter.

The signal goes to A4 on the NLDL line. On A4, the distortion signal goes through the wideband autorange amplifier and then it goes to A5 on the AUTOUT line. On A5, the signal is measured using the rms detector.

Envelope Delay

The transmitter outputs a signal between 300 Hz and 4000 Hz (3904 Hz with voiceband limit) amplitude modulated 50% by an 83 1/3 Hz signal.

The returned signal is input to A1 where it goes through without any amplification. The signal goes to A2 on the SIGNL line and leaves A2 on thr WSF1 line with no filter weighting. On A4, the signal (WSF1) goes through the wideband autorange amplifier. The A4 output (AUTOUT) is used in two places.

It goes to A5 where the signal level is measured throuth the wideband absolute value amplifier and the 5 Hz bessel filter (FWAWB). AUTOUT goes to A7 where the delay is measured. In the repeat mode, the 83 Hz signal is sent back to the transmitter for signal correction.

8-8. POWER-ON SELF CHECK

At power-on, the 4945A executes a series of self tests on the digital and analog circuits. If the display is functioning, error codes are displayed in the event of a hardware failure. The instrument also beeps and lights the front panel LEDs to indicate the passage of some digital tests and to serve as an indication in case the display hardware is not functional.

Power-on LED and beep sequence:

1. A10 CR1-LED on
2. Seven front panel LEDS all come on briefly, then flash and go off. These LEDs are located next to Volume, Level, Freq., TRMT/RCV, RCV/TRMT, and HOLD.
3. A11 passes - Volume LED on and 1 beep
4. A12 passes - Level LED on and 2 beeps
5. A13 passes - Freq. LED on and 3 beeps
6. Volume, Level, Freq. LED off
7. A10 CR1 LED off
8. TRMT/RCV LED on
9. A10 CR1 LED flashes
10. Display

Here is a description of the power-on test sequence.

When the power is first turned on (reset), the receiver processor turns on the LED on A10. The LED stays on for a couple seconds while the system goes through its tests. If this LED does not come on, the receiver processor (A10 U300) is not powering up correctly.

Also at reset, the system processor (on A11) begins its digital self check. First, the RAM used for microprocessor stack operations is tested (A11 U404). If this test fails the test stops and an error should be reported if the display is functioning.

A11 Tests

Next, the system start-up ROM (A11 U604) is tested for the proper checksum, location code and revision code. An error here also stops the test and the appropriate error should be displayed. If there is a critical failure there may be no display.

The A11 tests continue with the programmable timer test (U606), PIA test (U703) and the RAM test (U204).

If all the A11 tests pass, the 4945A beeps once and the LED next to the VOLUME key lights. If this LED does not light, suspect the A11 board.

A12 Tests

The memory on A12 is then checked, specifically;

real time clock - U308

RAM - U404, U500, U402

non-volatile RAM - U106, U107

ROM - U100, U200, U300, U400, U102, U302

If all the A12 tests pass, the 4945A beeps twice and the LED next to the LEVEL key lights. If this LED does not light, suspect the A12 board.

A13 Tests

The following tests are performed on A13;

CRT controller - U702

RAM - U502, U503, U102, U203, U205, U206, U305, U306,

If all the A13 tests pass, the 4945A beeps three times and the LED next to the FREQUENCY key lights. If this LED does not light, suspect the A13 board.

Besides the error codes, possible A13 errors can cause a false or misleading display. It is possible to get the three beeps and the LED indication and still have a blank display. In this case, refer to Display Troubleshooting.

Receiver Tests

The system processor tests the read/write capability of the shared RAM, U503 on A10. If the shared RAM test passes, the system interrupts the receiver processor (NMI) and instructs it to perform the following receiver tests.

- The LED on A10 (CR1) is turned off which indicates a successful receiver interrupt, and that the receiver has begun its tests.

- The receiver processor tests its stack memory (A10 U505). If it fails, the test stops and an error should be displayed.

- The A10 ROMs are tested by calculating the checksums and verifying the location and revision code. The ROMs are tested in the following order: A10 U607, U507, U407, U308, U307, U306 and U305.

  The receiver RAM is tested (A10 U405).

  The read/write capability of the shared RAM is tested by the receiver processor.

- The receiver processor tries to communicate with boards A4 through A7 and A9. If it can not read or write to any of these boards, a data/address bus problem is assumed and error should be displayed. If communication is possible with at least one board, appropriate errors are displayed which point to the boards that did not respond.

- The receiver processor instructs the transients processor on A9 (U102) to perform its self check. It checks its own ROM (A9 U400) and RAM (A9 U600) and reports the results to the receiver processor.

- The receiver processor performs a simple check of the analog circuits by measuring the level and frequency of a tone looped back internally from the transmitter. This test is a quick check of the instrument status.

Upon completing these tests, the receiver processor sends any error codes to the system processor for display. The error codes are sent with a checksum to insure communication integrity. In addition, the LED on A10 flashes on and off until the system acknowledges receipt of the error code list. A flashing LED on A10 indicates that the receiver/system communication path is not complete.

In general, whenever the LED on A10 flashes, it indicates that the system processor is not responding to an interrupt from the receiver. In this case, there may be something wrong with the system processor circuits or the interrupt line.

Next, the system and receiver processors execute a dynamic read/write test of the shared RAM (A10 U503). They attempt to write and read back from the RAM simultaneously in a coordinated test. This insures that the communications between the two microprocessor systems is entirely functional.

If any Interface modules are connected to the 4945A, they are also tested, and any errors are reported.

The system processor on A11 then checks the contents of the A12 non-volatile RAM (using the checksum) to determine whether the "last setup" information stored there was successfully recovered at power-on. If not, the message "LAST SETUP NOT RETAINED" is displayed.

The system copies the table of calibration constants from non-volatile memory into the shared RAM on A10, and instructs the receiver processor to check the table (using the checksum). If the receiver determines that the constants are correct, they are copied into the receiver RAM and used for making calibrated measurements. If not, the message "RECEIVER NOT CALIBRATED" is displayed. In this case, the receiver uses the default calibration constants (which are stored in ROM) to make all measurements until the 4945A is re-calibrated.

8-9. POWER-ON SELF CHECK TROUBLESHOOTING

At power on there are 3 major indications of the status of the power-on self check. These are the beeps, LEDs, and error codes. All can be used to determine the appropriate path for troubleshooting.

NOTE: To use the Free Run and SA Program Loops, and +5 volt signatures listed below, refer to the following sections:

8-13. DIGITAL TROUBLESHOOTING (SIGNATURE ANALYSIS)
8-14. SYSTEM PROCESSOR SA THEORY (A11,A12,A13)
8-15. RECEIVER PROCESSOR SA THEORY (A1-A10)
8-16. SYSTEM PROCESSOR SA TABLES (A11,A12,A13)
8-17. RECEIVER PROCESSOR SA TABLES (A10,A9,A1-A8)

POWER-ON SYMPTOMS	TROUBLESHOOTING APPROACH
A10 CR1 LED NEVER COMES ON	Use A10 FREE RUN Loop A to check the receiver processor kernel.(Section 8-15. for theory and Free Run pre-checks, and 8-17. for SA tables)
SEVEN FRONT PANEL LEDS COME ON AND STAY ON	Possible system processor kernel problem; Begin by using A11 Free Run Loops A and B. (Sections 8-14. for theory and Free Run pre-checks, and 8-16. for SA tables)
A10 CR1 LED FLASHING CONTINUOUSLY	Check interrupt LIRQ path from A10 to A11.
BAD OR NO DISPLAY:	
1. Did not pass power-on self-tests	1. Check A11 system processor kernel by using A11 Free Run Loops A and B. (Section 8-14 for theory and Free Run pre-checks, and 8-16 for SA tables) 2. Use A12 and A13 Free Run Loops. (Sections 8-14. for theory and Free Run pre-checks, and 8-16. for SA tables) 3. Put A11 S406 in position 14 and A11TP2 in NORMAL position. Check A11 ST2 and SP2 (TP1-7/TP1-8). If they are toggling, take +5V signatures (Section 8-14). 4. If they are not toggling refer to Section 8-14.
2. Passed power-on self-tests	1. Refer to Section 8-11. DISPLAY TROUBLESHOOTING.

NO BEEPS	1. If the power-on self-tests pass (as indicated by LEDs and a good display) but the beeper does not sound, check the following: A13 - U406 pin 5 = 607Hz +- 90Hz A13 - U406 pin 9 = 1,245Hz +-185Hz
ERROR CODES ARE DISPLAYED	1. Look up the error code under the "Error Code" table to identify the failing circuit, and use the following information for troubleshooting.
Error Codes 0xx- 6xx:	1. For error codes which are referenced "SYSTEM", take the +5 V signatures as described in Section 8-14. to determine which SA loop to use. 2. For error codes which are referenced "RECEIVER", go to Section 8-15 to determine which SA loop to use. Receiver SA Loops are in Section 8-17. 3. For error codes which are referenced "SYS/RCVR", either the System processor and related boards, or the Receiver processor and related boards could be causing the problem. Follow step 2 above first. If no +5 volt signatures fail, follow step 3. 4. For error codes which are referenced "xxx FR x ", use the indicated Free Run loops located in Sections 8-16. (for boards A11-A13), or 8-17. (for boards A9 and A10). Also refer to Sections 8-14. and 8-15. for the corresponding theory and Free Run pre-checks. 5. For error codes which are referenced "IRQ", check the IRQ circuitry on A10 and A11. Also A10 Free Run Loop A can be used. (Section 8-15. for theory and Free Run pre-checks, and 8-17. for Sa tables).
Error Code 700	This failure could be caused by any of the transmitter or receiver boards. To isolate, refer to the System Block Diagram, and board block diagrams and schematics. The following procedure will help to is-

	the problem. Diagnostic Mode 14, located in Section 8-34., can also be used for troubleshooting. 1. Loop the TRMT Tip and Ring to the RCV Tip and Ring. 2. Select the LEVEL FREQUENCY test under TEST Selection. A 1004 Hz signal should be tranmitted with a variable amplitude (amplitude is dependent upon the LEVEL selected). 3. Check the TRMT jack with a scope to see if the 1004 Hz is being transmitted. If it is, the transmitter section must be good, and the problem must be in the receiver section. To troubleshoot the receiver section refer to LEVEL/FREQUENCY MEASUREMENT located in Section 8-5. This will describe which receiver circuits and boards are used during the Level Frequency test. Use this information to follow the transmitted signal through the receiver boards. 4. If the transmitted signal is not present at the TRMT jack, either one of the transmitter boards are bad, or the path from the A18 transmitter output to the A58 Front panel jack is bad. Check for the signal at A17 TP3 to half split the transmitter. If the signal is present here, the problem is either the output stages of A17, A18, or the path to A58. 5. If the signal is not present at A17 TP3, check for it at the A17 input, and refer to Section 8-12. Transmitter troubleshooting.
Error Codes 8xx- 9xx	1. For I/O error codes, use the Free Run I/O Troubleshooting in section 8-18. Proceed on if necessary by using the individual I/O module troubleshooting (ie. RS232 Troubleshooting).

Error Codes

Power-on self check errors are displayed as they occur. The test program discovers and displays as many errors as possible before arriving at a point where further testing is pointless. If a key is pressed when the test program has stopped, the instrument attempts to go on with the tests.

An example error code display is shown below.

```
POWER-ON SELF CHECK ERRORS

008  013  113  213  404
605  606  700  etc.
```

The error codes are three digits and are divided into several error groups as shown below.

Error Code Groups

- 0XX - ROM checksum errors
- 1XX - ROM location code errors
- 2XX - ROM revision code errors
- 3XX - RAM write/read errors
- 4XX - system peripheral hardware errors
- 5XX - system IRQ line errors
- 6XX - receiver digital hardware errors
- 7XX - analog hardware errors
- 8XX - interface errors, port 1
- 9XX - interface errors, port 2

Here is a summary of the self check error codes, a description of each circuit tested and the possible failure.

Code	Circuit tested/failure	Reference
000	A11 U604, system start-up ROM - bad checksum	System
001	A12 U100, Main ROM #1 (6000-9FFF) - bad checksum	"
002	A12 U200, Main ROM #2 (A000-DFFF) - bad checksum	"
003	A12 U300, Bank 1 ROM (2000-5FFF) - bad checksum	"
004	A12 U400, Bank 2 ROM (2000-5FFF) - bad checksum	System
005	A12 U102, Bank 3 ROM (2000-5FFF) - bad checksum	"
006	A12 U202, Bank 4 ROM (2000-5FFF) - bad checksum	"
007	A12 U302, Bank 5 ROM (2000-5FFF) - bad checksum	"
008	A12 U104, Bank 6 ROM (2000-5FFF) - bad checksum	"
009	A12 U204, Bank 7 ROM (2000-5FFF) - bad checksum	"

011	A10 U607, receiver ROM #1 (E000-FFFF) - bad checksum	Receiver
012	A10 U507, receiver ROM #2 (C000-DFFF) - bad checksum	"
013	A10 U407, receiver ROM #3 (A000-BFFF) - bad checksum	"
014	A10 U308, receiver ROM #4 (8000-9FFF) - bad checksum	"
015	A10 U307, receiver ROM #5 (6000-7FFF) - bad checksum	"
016	A10 U306, receiver ROM #6 (4000-5FFF) - bad checksum	"
017	A10 U305, receiver ROM #7 (2000-3FFF) - bad checksum	"
018	A9 U400, transients board ROM - checksum error	A9 FR A,B
100	A11 U604, system start-up ROM - bad loc. code	System
101	A12 U100, Main ROM #1 (6000-9FFF)- bad loc. code	"
102	A12 U200, Main ROM #2 (A000-DFFF)- bad loc. code	"
103	A12 U300, Bank 1 ROM (2000-5FFF) - bad loc. code	"
104	A12 U400, Bank 2 ROM (2000-5FFF) - bad loc. code	"
105	A12 U102, Bank 3 ROM (2000-5FFF) - bad loc. code	"
106	A12 U202, Bank 4 ROM (2000-5FFF) - bad loc. code	"
107	A12 U302, Bank 5 ROM (2000-5FFF) - bad loc. code	"
108	A12 U104, Bank 6 ROM (2000-5FFF) - bad loc. code	"
109	A12 U204, Bank 7 ROM (2000-5FFF) - bad loc. code	"
111	A10 U607, receiver ROM #1 (E000-FFFF) - bad loc. code	Receiver
112	A10 U507, receiver ROM #2 (C000-DFFF) - bad loc. code	"
113	A10 U407, receiver ROM #3 (A000-BFFF) - bad loc. code	"
114	A10 U308, receiver ROM #4 (8000-9FFF) - bad loc. code	"
115	A10 U307, receiver ROM #5 (6000-7FFF) - bad loc. code	"
116	A10 U306, receiver ROM #6 (4000-5FFF) - bad loc. code	"
117	A10 U305, receiver ROM #7 (2000-3FFF) - bad loc. code	"
118	A9 U400, transients board ROM - bad loc. code	A9 FR A,B
200	A11 U604, system start-up ROM - bad rev. code	System
201	A12 U100, Main ROM #1 (6000-9FFF)- bad rev. code	"
202	A12 U200, Main ROM #2 (A000-DFFF)- bad rev. code	"
203	A12 U300, Bank 1 ROM (2000-5FFF) - bad rev. code	"
204	A12 U400, Bank 2 ROM (2000-5FFF) - bad rev. code	"
205	A12 U102, Bank 3 ROM (2000-5FFF) - bad rev. code	"
206	A12 U202, Bank 4 ROM (2000-5FFF) - bad rev. code	"
207	A12 U302, Bank 5 ROM (2000-5FFF) - bad rev. code	"
208	A12 U104, Bank 6 ROM (2000-5FFF) - bad rev. code	"
209	A12 U204, Bank 7 ROM (2000-5FFF) - bad rev. code	"
211	A10 U607, receiver ROM #1 (E000-FFFF) - bad rev. code	Receiver
212	A10 U507, receiver ROM #2 (C000-DFFF) - bad rev. code	"
213	A10 U407, receiver ROM #3 (A000-BFFF) - bad rev. code	"
214	A10 U308, receiver ROM #4 (8000-9FFF) - bad rev. code	"
215	A10 U307, receiver ROM #5 (6000-7FFF) - bad rev. code	"
216	A10 U306, receiver ROM #6 (4000-5FFF) - bad rev. code	"
217	A10 U305, receiver ROM #7 (2000-3FFF) - bad rev. code	"
218	A9 U400, transients board ROM - bad rev. code	A9 FR A,B
219	receiver software (overall) - bad rev. code	A10 FR A

300	A11 U404, system STACK RAM (0000-07FF) - R/W error	System
301	A10 U503, system SHARED RAM (0800-0FFF)- R/W error	Sys/Rcvr
302	A12 U106, U107, system RAM (1400-17FF) - R/W error	System
303	A12 U404, system RAM (1800-1FFF) - R/W error	"
304	A12 U500, system RAM (E000-E7FF) - R/W error	"
305	A12 U402, system RAM (E800-EFFF) - R/W error	"
306	A10 U503, receiver SHARED RAM (0000-07FF) - R/W error	Sys/Rcvr
307	A10 U405, receiver RAM (0800-0FFF) - R/W error	Receiver
308	A10 U505, receiver STACK RAM (1000-17FF)- R/W error	"
309	A10 U503, system/receiver SHARED RAM - dynamic R/W error	Sys/Rcvr
310	A11 U204, system RAM (bank 0, 2000-27FF) - R/W error	System
311	A13 U502, character RAM (bank 0, 2800-2BFF) - R/W error	"
312	A13 U503, attribute RAM (bank 0, 2C00-2FFF) - R/W error	"
313	A13 U306, display RAM (bank 0, 3000-37FF) - R/W error	"
314	A13 U206, display RAM (bank 0, 3800-3FFF) - R/W error	"
315	A13 U305, display RAM (bank 0, 4000-47FF) - R/W error	"
316	A13 U205, display RAM (bank 0, 4800-4FFF) - R/W error	"
317	A13 U203, display RAM (bank 0, 5000-57FF) - R/W error	"
318	A13 U102, display RAM (bank 0, 5800-5FFF) - R/W error	"
319	A9 U600, transients RAM - R/W error	Receiver
400	A11 U606, programmable timer error	System
401	A11 U703, PIA error	"
402	not used	
403	A12 U308, real time clock error	A12 FR A
404	A13 U702, CRT controller error	System
500	system IRQ error - system IRQ line is held low (A11 U701, pin 4):	IRQ
501	receiver fails to write anything into SHARED RAM A10 U503	Sys/Rcvr
502	receiver writes incorrectly into SHARED RAM (A10 U503)	A10 FR A
503	receiver does not respond by pulling on the system IRQ line (P1 pin 9 on A10 and A11)	IRQ
504	system IRQ error - system IRQ line (driven by A10) does not function properly (P1 pin 9 on A10 and A11)	IRQ
505	power-on self check data received from the receiver processor was sent with a bad checksum	A10 FR A
600	receiver digital bus bad - cannot talk to boards A4 through A7 or A9	Receiver
604	receiver cannot talk to A4	"
605	receiver cannot talk to A5	"
606	receiver cannot talk to A6	"
607	receiver cannot talk to A7	"
609	receiver cannot talk to A9 (handshake error)	"
610	receiver cannot talk to input buffer (A9 U502)	"
611	receiver cannot read output buffer (A9 U402)	"
612	receiver cannot read output buffer (A9 U302)	"

700 analog hardware error

Interface Error Codes

Port 1

800 RS-232 I/O processor internal RAM read/write error
801 RS-232 ROM Checksum error
802 RS-232 External RAM error (U202)
803 RS-232 UART internal loopback error
804 HP-IL I/O processor internal RAM read/write error
805 HP-IL ROM Checksum error
806 HP-IL system can not read/write to HP-IL chip
807 HP-IB I/O processor internal RAM read/write error
808 HP-IB ROM Checksum error
820 Invalid code read from interface
821 status bit fails to go true after 55 hex written
822 55 hex code written to I/O, AA hex code not read back
823 staus bit fails to go true after AA hex written
824 AA hex written to I/O, 55 hex not wrtitten back

Port 2

900 RS-232 I/O processor internal RAM read/write error
901 RS-232 ROM Checksum error
902 RS-232 External RAM error (U202)
903 RS-232 UART internal loopback error
904 HP-IL I/O processor internal RAM read/write error
905 HP-IL ROM Checksum error
906 HP-IL system can not read/write to HP-IL chip
907 HP-IB I/O processor internal RAM read/write error
908 HP-IB ROM Checksum error
920 Invalid code read from interface
921 status bit fails to go true after 55 hex written
922 55 hex code written to I/O, AA hex code not read back
923 status bit fails to go true after AA hex written
924 AA hex written to I/O, 55 hex not written back

8-10. KEYCODE TROUBLESHOOTING

Use this procedure if the keys on the front panel are inoperative or if the wrong functions are performed when a key is pressed.

The circuits involved are the front panel, the A25 board and the PIA chip on the A11 board.

If keycode problems are suspected, first check the keycode lines coming into the PIA on A11. Use the table below to check the codes for the suspect keys. Put the A11 board on an extender board. You have to press a key to see the codes.

Press Key	PIA pin 17	16	15	14	13	12	11	10	Hex Code	LED Lit
Not Used	1	1	0	0	0	0	0	0	C0	
Up	1	1	0	0	0	0	0	1	C1	
Down	1	1	0	0	0	0	1	0	C2	
Not Used	1	1	0	0	0	0	1	1	C3	
6	1	1	0	0	0	1	0	0	C4	
3	1	1	0	0	0	1	0	1	C5	
5	1	1	0	0	0	1	1	0	C6	
SK8	1	1	0	0	0	1	1	1	C7	
.	1	1	0	0	1	0	0	0	C8	
VOLUME	1	1	0	0	1	0	0	1	C9	CR5
LEVEL	1	1	0	0	1	0	1	0	CA	CR6
FREQ	1	1	0	0	1	0	1	1	CB	CR7
SK2	1	1	0	0	1	1	0	0	CC	
SK1	1	1	0	0	1	1	0	1	CD	
Not Used	1	1	0	0	1	1	1	0	CE	
ENTER	1	1	0	0	1	1	1	1	CF	
Not Used	1	1	0	1	0	0	0	0	D0	
Not Used	1	1	0	1	0	0	0	1	D1	
RCV/TRMT	1	1	0	1	0	0	1	0	D2	CR2
TRMT/RCV	1	1	0	1	0	0	1	1	D3	CR3
7	1	1	0	1	0	1	0	0	D4	
2	1	1	0	1	0	1	0	1	D5	
SK7	1	1	0	1	0	1	1	0	D6	
4	1	1	0	1	0	1	1	1	D7	
Normal Disp	1	1	0	1	1	0	0	0	D8	
8	1	1	0	1	1	0	0	1	D9	
9	1	1	0	1	1	0	1	0	DA	
Spec Disp	1	1	0	1	1	0	1	1	DB	
SK5	1	1	0	1	1	1	0	0	DC	
SK4	1	1	0	1	1	1	0	1	DD	
SETUP	1	1	0	1	1	1	1	0	DE	
SK3	1	1	0	1	1	1	1	1	DF	
SK6	1	1	1	0	0	0	0	0	E0	
1	1	1	1	0	0	0	0	1	E1	
-	1	1	1	0	0	0	1	0	E2	
0	1	1	1	0	0	0	1	1	E3	
AUTO SEQ	1	1	1	0	0	1	0	0	E4	
TEST SEL	1	1	1	0	0	1	0	1	E5	

The keycodes have the following format.

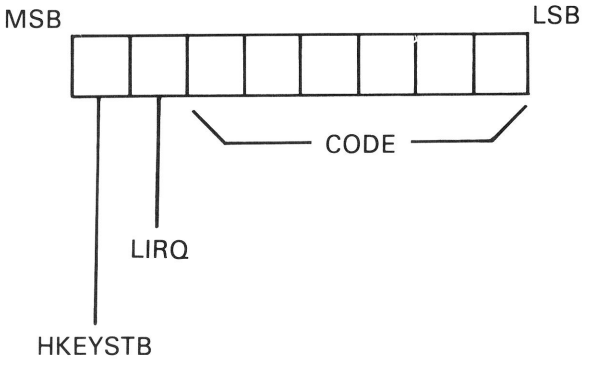

The upper two bits must always be high for a keycode to be processed.

If bits 0 through 5 are bad, trace the keycode back through U604 and the encoders on A25. Also check the actual input key line to verify the key operation.

If bit 6 is bad, the problem is on the A11 board.

If bit 7 is bad, follow the HKEYSTB line back through U504, U502 and U402 on A25.

Some keys cause front panel LEDs to light.
Verify that the front panel LED´S light when the appropriate key is pressed. If the LED´s do not light or are always lit, check U706, the PIA, RP806 or the LED.

If the LED is suspect, it is recommended that an LED tester be used to verify it first, due to the high cost of disassembling the front panel.

8-11. DISPLAY TROUBLESHOOTING

Bad or Blank Display

There are two catagories of problems that can occur with the 4945A display. These are the "no display" condition, where the screen is completely blank, and the "bad display" condition. A "bad display" includes such conditions as no vertical deflection, no horizontal deflection, and the many different varieties of garbled displays.

All of the above conditions can be caused by either the A19 CRT Driver, the A13 Video Generator, the Power Supply, or the A11 System Processor. If the System Processor is bad the 4945A can not pass the Power-On Self Check. Refer to "POWER-ON SELF CHECK" to determine if the instrument is passing the power-on self check. If it is not, refer to the "POWER-ON SELF CHECK TROUBLESHOOTING" procedure. If the instrument is passing its power-on self check, use the troubleshooting procedure below.

Troubleshooting Procedure

1. To begin isolating the problem, begin by verifying the power supplies.

2. Set the A19 test switch, S100, located towards the rear of the instrument, to the test position. A full inverse video raster should appear. If no raster appears, suspect the A19 board. Check the waveforms given by the A19 schematic diagram.

3. If a raster appears with the A19 test switch in the test position, suspect the A13 board. With the test switch still in the test position, check the following:

   Check the following signals on A13 :

   TP1-2 L/S = 1 MHz
   TP1-3 VID = toggling between TTL levels
   TP1-1 VDC = 8 MHz
   U300 pin 3 = toggling between TTL levels
   TP1-5 VSYNC = 67 Hz
   TP1-6 HSYNC = 20 KHz

   If these signals are good, proceed with the SA Program Loops for A13 the System Processor SA Tables section.

   If any signals are bad, refer below:

   L/S — If L/S is bad, check LD/SH from the A11 board and follow the signal through the A13 Delay circuit, U403, U404, and U600.

VDC — If VDC is bad, check the Dot Clk signal from the A11 board and follow the signal through A13 inverter U600.

VSYNC — If VSYNC is stuck high or low, check for shorts to +5 or ground.

Check the CRTC by using SA Program Loop 3c in Section 8-16. VSYNC is an output of the CRTC, and only goes to the Character Generator and A19. SA Program Loop 3c uses the System Processor to check the CRTC by doing a R/W test to an internal register of the CRTC. It is only possible to check one of nineteen internal registers, however. If all signatures for Loop 3c are good, suspect a bad CRTC or VSYNC trace problem.

HSYNC — If HSYNC is stuck high or low, check for shorts to +5 or ground.

Check the CRTC by using SA Program Loop 3c in Section 8-16. HSYNC is an output of the CRTC, and goes to one-shot U100. SA Program Loop 3c performs a read/write test of the CRTC. If all signatures for Loop 3c are good, suspect the CRTC or a HSYNC trace problem. If HSYNC is good at the CRTC, but is bad at TP1-8, suspect U100.

VID — If VID is stuck high or low, check for shorts to +5 or ground.

VID is the serial dot pattern from the character generator and goes through a level shifting and inverting circuit, U300. If it is toggling between TTL levels at TP1-3, but not at U300 output, suspect U300.

It is possible for VID to be toggling at both TP1-3 and U300 pin 3, but still be wrong due to problems with the character generator or its control circuitry. Use SA Program Loops 13a and 13b in Section 8-16. to check this circuitry.

If VID is not toggling at TP1-3, use SA Program Loops 13a and 13b in Section 8-16.

Test Pattern

The 4945A test pattern is shown below with a description of each area. To access the pattern, press TEST PATTERN in the Calibrate/Self Check menu under Setup.

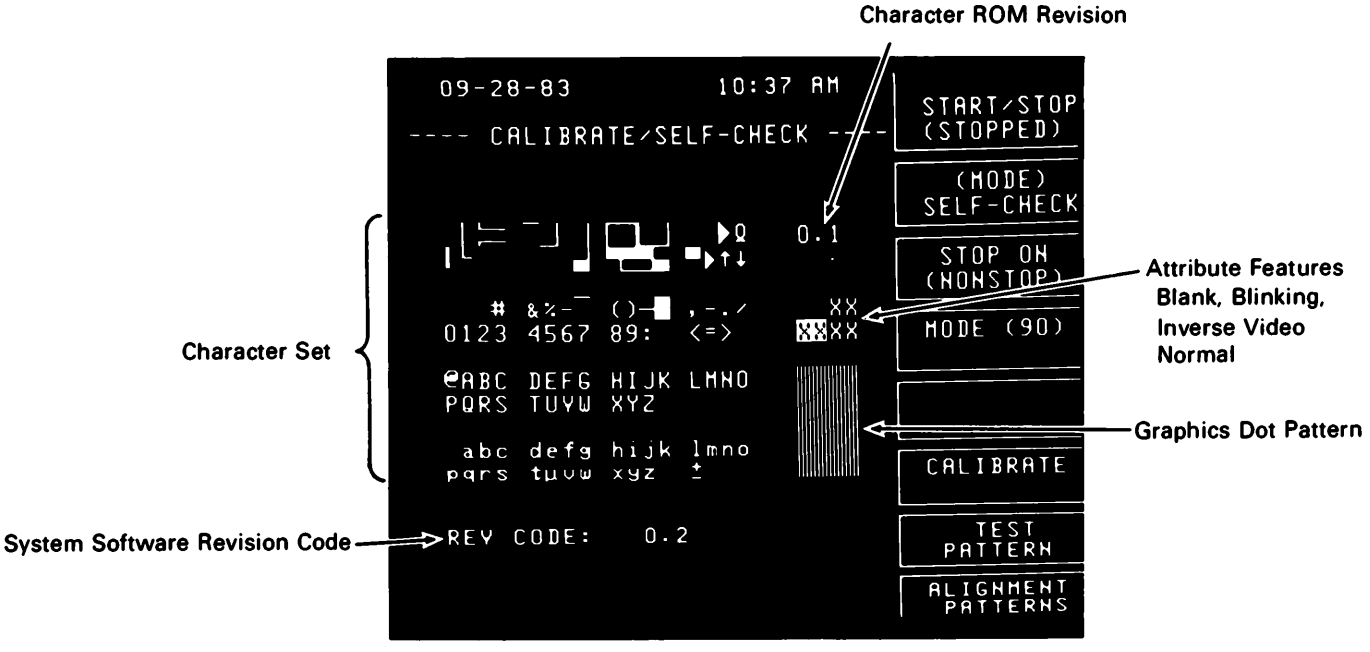

4945A Test Pattern

If the test pattern is correct, then A13 and A19 are functional. Improper strange or missing characters indicate a faulty ROM or address bus errors on A13. Refer to A13 SA program loops in the "System Processor SA Tables (A11, A12, A13)" to troubleshoot.

8-12. TRANSMITTER TROUBLESHOOTING (A14, A15)

Diagnostic modes 6, 7 and 8 test the transmitter operation and can be used to troubleshoot the two most complex transmitter boards, A14 and A15.

Mode 6 tests the oscillators and clock frequencies used by the transmitter. A procedure to check the A14 clocks and clock select circuits is given in the Mode 6 description.

Once the clocks are working, Mode 7 can be used to check the A14 synthesizer and the operation of the ROM and D-to-A circuits on A15. In this mode you can isolate problems to A14 or A15 by removing A15 and verifying A14 operation first. If A14 is alright, plug A15 back in and continue troubleshooting on A15. A procedure to check the A14 synthesizer and the A15 ROM is given in the Mode 7 description.

Mode 8 performs further checks on A14. It checks all four addresses of the A14 frequency latches. A procedure to check the latch addressing is given in the Mode 8 description.

8-13. DIGITAL TROUBLESHOOTING (SIGNATURE ANALYSIS)

Signature analysis is an integral part of the 4945A troubleshooting procedures. The HP5005A Signature Multimeter presents digital signatures with a four-character display on its front panel. The characters presented are special hexadecimal numbers (0-9 and ACFHPU) which are converted from the residue in a Cyclical Redundancy Code (CRC) shift register in the HP5005A after START and STOP signals have been received. The last six symbols are not the common hexadecimal symbols ABCDEF because the seven segment display cannot show a B or D that would be different from an 8 or 0 respectively. The number of data bits between the START and STOP signals can be 1 to infinity.

In order to produce stable, valid signatures:

1) Signatures are dependent both on the data and the timing of the input bit stream.
2) The circuit under test must provide its own stimulus to create the bit stream.
3) Circuits are tested with SA while running at normal operating speed.
4) The bit stream must be periodic in order to yield a stable signature.
5) In order to be useful, signatures must be repeatable from unit to unit.
6) The data of the input bit stream must be repeatable, and must be the same each time between the start and stop transitions.
7) The timing of the input bit stream must also be repeatable. Circuits which employ RC timing delays or one-shots will not produce repeatable signatures.
8) The input bit stream must be at a valid logic level at the instant of the chosen clock transition. For the 6800 microprocessor-based instruments, this implies using the negative edge of the clock 02.

Implementing Signature Analysis on the HP4945A:

I. FREE RUN MODES - used to verify the kernel:

- Isolates the microprocessor from the data bus
- Forces a "CLRB" instruction to the microprocessor
- Provides pull-up resistors on the data bus
- Disables all RAM (non-repeatable data)

In the FREE RUN modes, the microprocessor cycles repeatedly through its entire address field exercising the address decoding logic and reading the data stored in ROM. Stable signatures will verify the correct operation of the address and data busses, the address decoding logic and the ROMs.

II. SA PROGRAM MODES - used to verify all I/O ports

In the SA PROGRAM modes, the microprocessor runs a special program which is designed to exercise all of the digital circuits outside of the kernel. The program "wiggles" all of the digital lines that it can in a repeating pattern in order to produce stable signatures. Signals which can be used for START and STOP inputs are also driven by the SA PROGRAM.

4945A SA PRE-CHECKS AND USE

CAUTION

When using any Signature Analysis on the 4945A be aware of the following in order to insure that bad signatures are the result of a true failure, and not are not due to improper use of the signature analyzer.

1. ALWAYS ground the SA probe as some of the 4945A SA loops are sensitive to ground problems.

2. ALWAYS cycle the power when changing qualifiers within an SA loop, or when changing any part of the signature analyzer set up.

3. ALWAYS check at a +5 volt TP for the given +5 v reference before proceeding to take any signatures. If the +5 v reference signature is bad this indicates that the start/stop window has been changed due to a failure. In tests that loop on fail, this indicates that either a portion of the test has failed and is looping on failure, or that the start/stop circuitry needs to be troubleshot. In tests that are not loop on fail, the start/stop circuitry needs to be troubleshot.

8-14. SYSTEM PROCESSOR SA THEORY (A11, A12, A13)

Signature Analysis is available for A11, A12, A13 and part of A10 and can be divided into 2 basic modes. These are the Free-Run mode and the Normal Mode. A11 TP2 is used to select either of these modes.

When TP2 is in the Normal position, a four position dip rocker switch, A11 S406, is used to binary select either the Normal operation mode of the instrument (position #0) or any of fifteen different SA program loops (positions #1-15) for troubleshooting.

When TP2 is in the Free-Run position, SA can be used to check the system processor kernel on A11, and its access of the A12 and A13 boards.

Following is a description of both the Free-Run mode, and the 15 different SA program loops availabe in the Normal mode, as well as some pre-checks that should be made before attempting to use any of the System Processor SA.

SYSTEM PROCESSOR SA PRE-CHECKS

Before using any of the System Processor Freerun or SA Program Loops, check the following. These signals are critical to operation and failures here will have to be troubleshot first.

Note: A11 IC and test point references are on A11.

1. Check the 1MHz PHI1 and PHI2 clocks with a scope.

   PHI1: U203 pin 6, U205 pin 6, U701 pin 3

   PHI2: U203 pin 10, U205 pin 8, U701 pin 37

2. Check the other clocks listed below with a counter.

Check	Frequency	Mnemonic
U202 pin 6	1 MHz	ENABLE
U202 pin 9	1 MHz	DBE
U302 pin 7	1 MHz	LWRE
U302 pin 10	1 MHz	LTRANSEN
U103 pin 6	8 MHz	DOTCLK
U103 pin 10	1 MHz	LD/SH
U102 pin 6	1 MHz	CHCLK
U102 pin 9	1 MHz	LWE13
U100 pin 10	16 kHz	XMTCLK

A11 TP2 in Free Run Position

When A11 TP2 is put into the Free Run position, the System Data Bus (SD0-SD7) path to microprocessor U701 is opened by pulling the Data Buffer's enable line,U803 - pin 19, high. D7 and D5 to the processor are also pulled low through CR3 and CR4, and JU602 is removed to disable any interrupts to the processor.

If the processor clocks and supply voltages are correct, the processor should try and execute a read cycle when powered on. Because D7 and D5 are pulled low, it will read a $5F instruction, which is a "CLR B" for the 6800 processor. This will clear the contents of accummulator B, and the processor will increment its address and attempt to do another read. Because the System Data Bus has been disabled through the Data Buffer, the processor will continually read the $5F instruction and then increment its address. In this manner, the processor is made to cycle through its address range, and the System Address Bus and Address Decode Circuitry can be checked using SA. The System ROM U604 and the System Data Bus can also be checked by qualifying on the ROM enable pin 18. While the Free Run loop is executing, some circuitry can be checked on A12 and A13 also. Below is a summary of the circuits on A11, A12, and A13 which can be checked during Free Run.

System Processor Free Run Loops

A11:	Free Run Loop A	Checks:	1. System Address Bus , Address Decode Circuitry.
	Free Run Loop B	Checks:	1. ROM Data and Data Bus.
A12:	Free Run Loop A	Checks:	1. System Address Bus after it is buffered on A12. 2. System Data Bus on both sides of A12 Data Buffer XCVR. 3. Control lines generated by A11 after they are buffered on A12 by Control buffer. 4. Various decode circuitry 5. Control lines to Real Time Clock.
A13:	Free Run Loop A	Checks:	1. System Address Bus through A13 Address Multiplexers.

SYSTEM PROCESSOR FREE RUN LOOP PRE-CHECKS

Before using any of the System Processor Free Run Loops, check the following critical signals. Failures here will prevent the Free Run loops from operating, and will have to be troubleshot first.

Configure the A11 board for FREE RUN by setting the TP2 jumper to FREE RUN and removing JU602.

Check the signals listed below.

U701 pin 4 (IRQ) should be high.

U701 pin 6 (NMI) should be high.

U701 pin 2 (HALT) should be high.

U701 pin 40 (RESET) should be high.

U701 pin 34 (MR/W) should be high.

Press the reset switch and release it; U701 pin 40 should go low momentarily after the switch is released. U804 pin 16 should do the same thing.

A11 TP2 in Normal Position

During Normal operation of the instrument A11 TP2 should be in the Normal position and S406 should be in the 0 position. SA stimulus is available for various circuits on A11, A12, A13, and part of A10, by changing the setting of S406.

Although S406 is physically marked 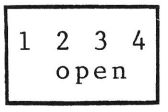

, it is used to binary

select 15 different positions for SA Program loops, where open = 1, and closed = 0.

Binary Equivalent

MSB LSB
8 4 2 1

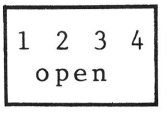

Following is a description of each of the SA program loops, how to use them, and some SA program loop pre-checks.

SYSTEM PROCESSOR SA PROGRAM LOOPS PRE-CHECKS

Before using any of the System Processor SA Program Loops, do the following.

Verify the SA Loop hardware by setting S406 as shown below. Set A11 TP2 to Normal position.

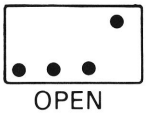

position 14

With an oscilloscope, check TP ST2 and SP2 for a waveform with an approximate frequency of 13 kHz. The signal's high time should be approximately 56 microseconds and the low time should be approximately 21 microseconds.

If ST2 or SP2 are not correct, none of the System Processor SA Program Loops can be used, as these signals are used for start and stop. Check A11 S406, U804 Buffer, R706, and the PIA U703.

USING A11 SA PROGRAM LOOPS

S406 positions 1 through 12: System Processor SA Program Loops 1-12 are loop on fail tests (except part of SA program loop 3 Bankselect test). When a failure occurs in these tests, the portion of the test that is failing will be repeatedly executed. If this happens other circuits normally tested in that loop will not be exercised.

S406 position 13: Position 13 of S406 generates a test pattern that is used to test the A13 RAM and External Character ROM. It is not a loop on fail test.

S406 position 14: Position 14 of S406 is used to verify the start/stop bits used during the SA program loops, as explained under "SYSTEM PROCESSOR SA PROGRAM LOOP PRE-CHECKS".

S406 position 15: Position 15 of S406, "All Tests", is a composite of all the SA program loops performed in S406 positions 1-12. It is not a loop on fail test, and therefore can be used to exercise all possible circuits, regardless of failure. Since "All Tests" is a composite loop it is long and signatures are VERY slow to stabilize (approximately 30 seconds).

How to use SA Program Loops

If a failure occurs during execution of a loop on fail test, the circuit that is failing can be checked in that loop. Other circuits normally tested in that loop can not be checked in that loop while it is looping on failure. It may be advantageous to look at these other circiuts, or address and control lines to the failing circuit. To do this S406 position 15, "All Tests", must be used. The Free Run loops can also be used to check address and control lines.

The SA program loops are labelled and sequentially organized according to the S406 position used in the loop set up conditions. Each SA program loop 1-12 (excluding loop 11) has a S406 position 15 counterpart loop. These position 15 loops (loops 1:15 through 12:15) are just small chunks of the "All Tests" loop.

+5 VOLT SIGNATURES

Because of the loop on fail nature of many of the SA program loops, + 5 volt signatures can be taken while sequentially stepping through S406 positions. The resulting + 5 volt signatures will give a go/no go indication of whether a test is failing.

To take the + 5 volt signatures, set the signature analyzer as listed below and step through each of the S406 positions. If a bad + 5 volt signature is found, use the associated SA program and position 15 counterpart loops. ALWAYS begin troubleshooting by using the FIRST + 5 volt signature failure encountered.

+5 VOLT SIGNATURE TABLE

The + 5 V signatures listed below are taken on the +5 volt TP on A11 with the Signature Analyzer in the Normal Mode and connected as follows:

A11TP2 in Normal A11 JU602 Removed

START	ST2	TP1-7	rising edge
STOP	SP2	TP1-8	falling edge
CLOCK	CLK1	TP1-1	rising edge

A11 S406 SWITCH POS		+5V SIGNATURES	BOARD TESTED	SA PROGRAM LOOP #	CIRCUITS TESTED
DECIMAL	BINARY				
1	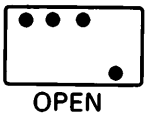 OPEN	98F9	A11	LOOP 1, 1:15	A11 SYSTEM ROM
2	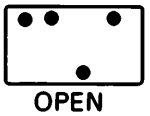 OPEN	C627	A11	LOOP 2, 2:15	A11 SYSTEM RAM
3	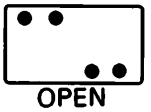 OPEN	C6FF	A11	LOOP 3a, 3a:15 3b, 3b:15	A11 PERIPHERALS: PIA, PTM, BANK-SELECT, LED DRIVER CIRCUITRY
			A13	LOOP 3c, 3c:15	A13 CRTC
4	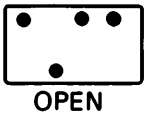 OPEN	267A	A12	LOOP 4, 4:15	A12 MAIN ROMS
5	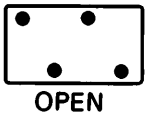 OPEN	9HUH	A12	LOOP 5, 5:15	A12 BANK 1&2 ROM
6	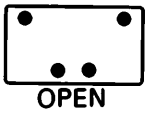 OPEN	8U89	A12	LOOP 6, 6:15	A12 BANK 3&4 ROM
7	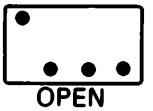 OPEN	8U89	A12	LOOP 7, 7:15	A12 BANK 5&6 ROM
8	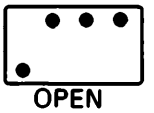 OPEN	2A78	A12	LOOP 8, 8:15	A12 BANK 7 ROM

9	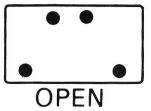 OPEN	UPC0	A10	LOOP 9, 9:15	SYSTEM ACCESS OF A10 SHARED RAM
10	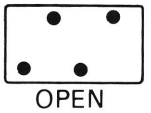 OPEN	500A	A12	LOOP 10, 10:15	A12 RAM
11	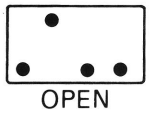 OPEN	86H2	A12	N/A	NOT USED FOR SA/USED TO TUNE RTC OSC. ON A12
12	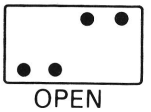 OPEN	3577	A11 A13	LOOP 12a, 12a:15, 12b, 12b:15	SYSTEM ACCESS OF A13 RAM
13	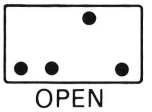 OPEN	AF3A	A13	LOOP 13a, 13b	TEST PATTERN FOR A13 RAM AND EXTERNAL CHAR. ROM
14	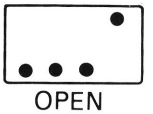 OPEN	HF36	A11	N/A	USED TO VERIFY START/STOP BITS (ST2 AND SP2) FOR SA PRO-GRAM LOOPS
15	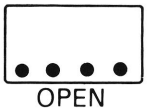 OPEN	N/A	A10,A11, A12,A13	N/A	ALL CIRCUITS EXERCISED DURING S406 POSITIONS 1-12

System Processor SA Program Tests

Rom Tests

The SA tests exercised in S406 positions 1,4,5,6,7&8 are checksum tests. For each Rom checked each byte of the Rom is read and summed to generate a checksum. The first two bytes of the Rom contain the expected checksum for the Rom. The value is added to the calculated checksum. If the net result is FFFFH, the test has passed. If not, the test has failed and will be repeatedly executed in a "loop on fail" mode.

Ram Tests

The SA tests exercised in S406 positions 2, 9, 10, and 12 are walking ones tests performed on various RAM. As each Ram is tested, all data in the Ram is initially cleared. The Ram is read for the clear condition. If it passes a 01hex is written to the Ram and then checked. This process continues with the single 1 bit being shifted to the left until all locations contain 80hex. If any errors occur between the read/write of each bit position, a flag is set and the test is repeatedly executed in a looping fashion.

Peripherals Test

The SA tests in S406 position 3 exercise several different circuits. One portion of the test is actually a walking ones test (similar to those performed on the RAM) that is used to test the control registers of the PIA & PTM. Another portion tests the bank select buffer by writing to a dummy address in each bank so that all the bank seclect lines (B0-Bank 7) are toggled. Finally the CRT controller on A13 is exercised by performing a read/write test to one of its internal registers.

Display Test Pattern

The SA test exercised in S406 position 13 generates a constant test pattern that can be used to check the External Character Rom and various Ram on A13.

8-15. RECEIVER PROCESSOR SA THEORY (A1-A10)

Rcvr FREE RUN Mode

Switch S100 at the upper left corner of board 10 is used to put the receiver processor into a signature analysis mode. If the first part of the switch (C1) is switched from NORMAL to FREE RUN, the data bus buffer U200 will be disabled and the processor will see a 'CLR B' instruction always (via R200, CR3 and CR4). This will cause the processor U300 to cycle through the entire 64k address space looking for the next instruction, which will always be a 'CLR B'. As it cycles through the entire address space, the processor will exercise every possible state of address decoder U103, and will fetch data from every location in the 56k of EPROM. This will provide the address bus, the EPROM chip selects and the data bus with unique signatures which will verify the operation of the kernal. Because data in the RAM memory could power up in any state, causing stable but not repeatable signatures, the RAM must be disabled during free run. Pull-up resistors are provided to keep the data lines in a known state for those portions of the address range which are not decoded.

Test points 6 through 13 provide access to the data bus to take signatures in the free run mode. Valid signatures here verify that the kernel is indeed good. A15 (TP5) is used for a START and STOP signal, and the clock PH12 is available on TP3.

A10 Free Run Loop Pre-Checks

The following conditions must be met in order to use the Receiver Processor A10 Free Run Loop A:

1. The supply and ground voltages to the Receiver Processor must be correct.

2. 1 MHz clocks PHI1 and PHI2, supplied to the processor, U300 pins 3, 36 and 37.

3. The following pins should be high:

U300-40	Reset	U300-4	INT REQ
U300-6	NMI	U300-34	R/W
U300-2	Halt		

4. S100, CR3, CR4 and address bit 15 (TP5) are used to implement the Free-Run loop, therefore, they must be functional in order to take SA.

A9 Free Run Loop Pre-Checks

The following conditions must be met in order to use the Transients Processor A9 Free Run Loops A and B.

1. The supply and ground voltages to the Transients Processor must be correct.

2. 8 MHz clocks must be present at the processor, U102 pins 38 and 39.

3. The following pins should be high:

   U102-2 NMI
   U102-3 IRQ
   U102-4 FIRQ
   U102-32 DMA
   U102-36 MRDY
   U102-40 HALT
   U102-32 R/W
   U102-37 RESET

4. Jumpers J1-J4, CR3, CR4, and address bit 15 (P2A15) are used to implement the Free Run Loops, therefore, they must be functional in order to take SA.

Rcvr SA PROGRAM Mode

In addition to the free run mode, a special signature analysis program has been written which is designed to exercise all parts of the receiver digital hardware in a periodic fashion, thus creating stable signatures virtually everywhere. This program is also accessed via S100 by switching the second part of the switch (C2) into the SA program position.

START/STOP signals are available in the SA PROGRAM mode on test pins 14 through 19 (SA1-SA6). The clock again is present at TP3.

RECEIVER PROCESSOR FREE RUN AND SA PROGRAM LOOPS

LOOP #	BOARD TESTED	CIRCUIT TESTED
A10 Free Run Loop A	A10	Receiver processor Address Bus Data bus Chip select decode All Receiver ROM
A10 SA Program Loop B	A10	Shared RAM during receiver access
A10 SA Program Loop C	A10	ROM CD U507
A10 SA Program Loop D	A10	ROM AB U407
A10 SA Program Loop E	A10	Receiver RAM U405
A10 SA Program Loop F	A10	Stack RAM U505
A10 SA Program Loop G	A10	ROM 89 U308
A10 SA Program Loop H	A10	ROM 67 U307
A10 SA Program Loop I	A10	Receiver peripheral data and address bus for communicating with other boards REN, LREN, RR/W
A10 SA Program Loop J	A10	ROM 45 U306
A10 SA Program Loop K	A10	ROM EF U607
A10 SA Program Loop L	A10	ROM 23 U305
A9 Free Run Loop A	A9	Transients processor Decoder output Start/stop bit for SA
A9 Free Run Loop B	A9	ROM data bus
A9 SA Program Loop A	A9	A10/A9 interface Address decoder Address comparator
A9 SA Program Loop B	A9	RAM U600 access
A9 SA Program Loop C	A9	RAM U600
A9 SA Program Loop D	A9	Latch data

RECEIVER PROCESSOR FREE RUN AND SA PROGRAM LOOPS (Cont'd)

A8 SA Program Loop A	A8	A10/A8 interface Address decoder Address comparator Input control latch
A8 SA Program Loop B	A8	Input latch for data transients
A8 SA Program Loop C	A8	Input latch for data transients
A1 SA Program Loop A	A1	A10/A1 interface Address decoder Address comparator Data bus decoder
A2 SA Program Loop A	A2	A10/A2 interface Address comparator Input control latch
A3 SA Program Loop A	A3	A10/A3 interface Address comparator Address decoder Input control latch
A4 SA Program Loop A	A4	A10/A4 interface Address comparator Address decoder Input control latch Input data latches
A5 SA Program Loop A	A5	Programmable counters Data latches Comparator circuit Control status latch Counter mode counter
A5 SA Program Loop B	A5	A10/A5 interface Address comparator Address decoder Control latches
A6 SA Program Loop A	A6	A10/A6 interface Address comparator Address decoder Input control latch
A7 SA Program Loop A	A7	A10/A7 interface Address comparator Address decoder Input control latch

TROUBLESHOOTING EXAMPLE

SYMPTOM: Error code 003 is displayed at power-on.

FAILURE: Open address bit to Bank 1 ROM due to bad IC socket.

APPROACH: Use the 8-9. POWER-ON SELF CHECK TROUBLESHOOTING table, "error codes are displayed", step 1. and look up error code 003. This error code is referenced as a "SYSTEM" error, and corresponds to A12 Bank 1 ROM U300. "Error codes 0xx- 6xx" indicates that the +5 volt signatures of Section 8-15. need to be taken for "SYSTEM" errors. When this is done, the signature for S406 position 5 will be the first + 5 volt signature to fail. Both SA Program loops 5 and 5:15 exercise A12 Bank 1 and Bank 2. If Bank 1 is failing, as indicated by the error code, SA program loop 5 will be looping on the Bank 1 ROM, and Bank 2 will never be enabled. This can be verified when using loop 5 by qualifying on the Bank 2 enable, U400-20. If Bank 2 is not being enabled the + 5 v reference for U400 will be bad. Bank 2 signatures can not be taken in loop 5 while the test is looping on Bank 1. Bank 1 signatures should be taken, however, to see if a single data bit output is bad, or if all outputs are bad. In this case, all of the data bit outputs would be bad. Loop 5:15 could be used to check Bank 1 and Bank 2 without looping on failure. This would give confidence that the problem is solely on the Bank 1 ROM. Several conclusions can be drawn at this point. If in loop 5:15, all of the Bank 2 signatures are good, the A12 address bus must be good to Bank 2. Also, because the + 5 volt signatures of Section 8-15. give a go/no go indication of the SA program loops, and are taken sequentially, we can conclude then, that the address bus to the MAIN ROM, U100 and U200, must also be good. The address bus to Bank 1 should be checked, however. This can be done by using the A12 Free Run loop A. In this loop the address bus signatures are taken at the A12 Address Buffer outputs. Even if signatures are good at these points (as they would be in this example) the signatures should also be taken directly at the Bank 1 address pins to verify continuity. This is where the problem would be located in this example.

This example should show that it is sometimes neccessary to alternate between using the Free Run loops (to verify addressing and decoding), the SA program loops (to check a particular part that is looping on failure), and the SA program position 15 counterpart loops (to check parts of a circuit without looping on fail).

NOTE: The above example is intended to be used in conjunction with the SYSTEM PROCESSOR SA THEORY found in Section 8-14. in order to stress the loop on fail nature of some of the SA Program loops.

8-16. SYSTEM PROCESSOR SA TABLES (A11, A12, A13)

Table 8-1. A11 Free Run Loop A

PCA: A11

Test Conditions: Set A11TP2 to FREERUN and remove A11JU602

A11S406 Position 0

OPEN

Signature Analyzer Connections on A11:				Checks:
START	ST1	TP1-3	Rising	System Processor
STOP	SP1	TP1-4	Rising	Address Bus and
CLOCK	CLK1	TP1-1	Rising	Decode Circuitry

+5 v reference = 0003 *=Not blinking

U301 - 6 = 37C6
U402 - 8 = 8P4F
11 = 9842
U500 - 4 = 3838
6 = 160H
7 = 04UU
9 = 04HU
10 = F077
U501 - 6 = 4H7C
8 = F4AC
U502 - 4 = 0PP7
6 = 0P20
7 = 8CU2
9 = A838
10 = F5F6
11 = CF87
12 = HU5A
U602 - 7 = 2302
13 = 64HF
14 = 29A4
15 = 5FUA

U800 - 9 = U628
10 = 1745
11 = 817C
12 = 8H45
13 = 5652
14 = 32U8
15 = P3C9
U801 - 3 = 0002
5 = 4868
7 = 6U28
9 = 6321
12 = 7791
14 = 37C5
16 = 4FCA
18 = 9UP1
U802 - 3 = U759
5 = 1U59
7 = 8484
9 = UUUU
12 = FFFF
14 = P763
16 = 0356
18 = 6F9A
U804 -14 = 0003*

Table 8-2. A11 Free Run Loop B

PCA: A11

Test Condition: Set A11TP2 to FREERUN and remove A11JU602

A11S406 Position 0

OPEN

Signature Analyzer Connections on A11:				Checks:
START/STOP	ST1	TP1-3	Rising/Rising	System ROM
QUALIFIER	U604-18	CE	Low Level	Data bus
CLOCK	CLK1	TP1-1	Rising	

+5 v reference = P254

U604 - 9 = UP49
10 = H8P0
11 = 463H
13 = A3U9
14 = H52U
15 = PC5F
16 = 8209
17 = 678A

Table 8-3. A12 Free Run Loop A

PCA: A12

Test Condition: Set A11TP2 to FREERUN position and remove A11JU602

A11S406 Position 0

OPEN

Signature Analyzer Connections on A11:				Checks:
START	ST1	TP1-3	Rising	System Data Bus
STOP	SP1	TP1-4	Rising	System Address Bus
CLOCK	CLK1	TP1-1	Rising	Control Lines

+5 v reference = 0003 * = Non-blinking

A12TP3 -
LRTC = 5652
LDTE = 52CH
6000 = 1182
CMOS = 9842
CIRQ = 0003*
VSTB = 0003*
PWDN = 0003*
U208-3 = 9841
4 = 04UU
6 = 04UF
8 = 04UU
U406-3 = 0003*
6 = 1FHA
8 = F735
U407-4 = 1FHA
5 = F735
6 = U1FP
7 = 7F70
U408-4 = 0003*
U506-4 = 0000
6 = 0003
8 = 0003*
11 = 0000*
13 = 0003*

U508-2 = 1FH9
3 = 1FHA
6 = 0000
8 = 0000*
9 = 0003*
11 = 0000
U606-9 = F4AC
10 = 5FUA
13 = 0003*
U607-1 = 9851
2 = 9842
4 = 04UU
5 = 5652
6 = 52CH
U608-1 = 1183
2 = C9U1
3 = A871
4 = 534H
5 = F9CF
6 = 9AU2
8 = 5993
9 = 0003*
10 = 5993
U700-3 = 0000
5 = 0003
7 = 0003*
9 = 0003*
12 = 0000
14 = 0003
16 = 0003
18 = 9842

U702-3 = 9UP1
5 = 4FCA
7 = 37C5
9 = 7791
12 = 6321
14 = 6U28
16 = 4868
18 = 0002
U703-3 = U759
5 = 1U5P
7 = 8484
9 = UUUU
12 = FFFF
14 = P763
16 = 0356
18 = 6F9A
U707-1 = 0003*
5 = 0003*
6 = 0003*
11 = A98A
12 = 4P23
15 = 2302

Table 8-2. A11 Free Run Loop B

PCA: A11

Test Condition: Set A11TP2 to FREERUN and remove A11JU602

A11S406 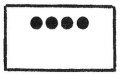 Position 0

Signature Analyzer Connections on A11:				Checks:
START/STOP	ST1	TP1-3	Rising/Rising	System ROM
QUALIFIER	U604-18	CE	Low Level	Data bus
CLOCK	CLK1	TP1-1	Rising	

+5 v reference = P254

U604 - 9 = F26P
10 = 492C
11 = P40F
13 = 04H1
14 = POCF
15 = 4685
16 = 57U4
17 = 2452

Table 8-4. A13 Free Run Loop A

PCA: A13

Test Condition: Set A11TP2 to FREERUN position and remove A11JU602

A11S406 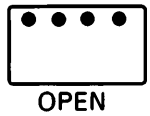 Position 0

OPEN

Signature Analyzer Connections on A11 and A13:

			Checks:
START	A11 ST1	Rising	System access of A13
STOP	A11 SP1	Rising	
CLOCK	A13 U702-21	Falling	

+5 v reference = 0003

U400-5 =	4FC9
7 =	4FC9
9 =	3F45
11 =	3F45
12 =	6U28
14 =	6U28
U601-4 =	1A05
6 =	84HH
U801-7 =	37C5
9 =	7791
12 =	6321
U802-4 =	0356
7 =	1U5P
9 =	6F9A
12 =	U759
U803-4 =	P763
7 =	FFFF
9 =	UUUU
12 =	8484

Table 8-5. SA Program Loop 1

PCA: A11

Test Conditions: Set A11TP2 to NORMAL position and remove A11JU602

A11S406 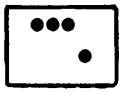 Position 1

Signature Analyzer Connections on A11:				Checks:
START	ST2	TP1-7	Rising	System ROM Data Bus
STOP	SP2	TP1-8	Falling	
CLOCK	CLK1	TP1-1	Rising	

+5 v reference = 98F9, MR/$\overline{W}$ U701- 34 = U9AH

U604 - 9 = C400
10 = UU9U
11 = 37U9
13 = 9124
14 = OFPU
15 = P311
16 = 320H
17 = OF53

REPLACEMENT PAGE FOR 8-52 (FOR SN 2407A INSTRUMENTS ONLY)

Table 8-4. A13 Free Run Loop A

PCA: A13

Test Condition: Set A11TP2 to FREERUN position and remove A11JU602

A11S406 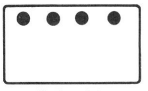 Position 0

OPEN

Signature Analyzer Connections on A11 and A13:

START	A11 ST1	Rising
STOP	A11 SP1	Rising
CLOCK	A13 U702-21	Falling

Checks:
System access of A13

+5 v reference = 0003

U400-5 = 4FC9
7 = 4FC9
9 = 3F45
11 = 3F45
12 = 6U28
14 = 6U28

U601-4 = 1A05
6 = 84HH

U801-7 = 37C5
9 = 7791
12 = 6321

U802-4 = 0356
7 = 1U5P
9 = 6F9A
12 = U759

U803-4 = P763
7 = FFFF
9 = UUUU
12 = 8484

Table 8-5. SA Program Loop 1

PCA: A11

Test Conditions: Set A11TP2 to NORMAL position and remove A11JU602

A11S406 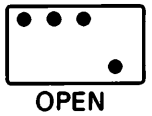 Position 1

OPEN

Signature Analyzer Connections on A11:

				Checks:
START	ST2	TP1-7	Rising	System ROM Data Bus
STOP	SP2	TP1-8	Falling	
CLOCK	CLK1	TP1-1	Rising	

+5 v reference = 98F9, MR/$\overline{W}$ U701- 34 = U9AH

U604 - 9 = 9FHU
10 = COUP
11 = 0H59
13 = U936
14 = 7UFP
15 = 4HFF
16 = U454
17 = PF68

Table 8-6. SA Program Loop 1:15

PCA: A11 Signatures take approx. 30 secs. to stabilize

Test Conditions: Same as for loop 1 except:

A11S406 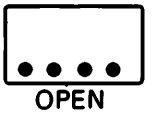 Position 15

OPEN

Signature Analyzer Connections on A11: Same as for loop 1

+5 v reference = 4U73

U604 - 9 = AU6P
10 = 59H4
11 = 29H0
13 = 6UA5
14 = F722
15 = 2017
16 = 14A7
17 = 2P4F

Table 8-7. SA Program Loop 2

PCA: A11

Test Condition: Set A11TP2 to NORMAL position and remove A11JU602

A11S406 Position 2

Signature Analyzer Connections on A11:				Checks:
START/STOP	ST2	TP1-7	Rising/Falling	A11 System RAM
QUALIFIER	As noted below		Low Level	
CLOCK	CLK1	TP1-1	Rising	

Note: Cycle power when changing qualifier

Qualifier= U204-18	Qualifier= U404-18
+5 v ref.= 2131	+5 V ref.= 540F
U204 - 9 = U39U	U404 - 9 = PFAH
10 = 7060	10 = 84H5
11 = 52P6	11 = H8U4
13 = A3F6	13 = 5H9U
14 = 0588	14 = 435H
15 = 8F6U	15 = 8043
16 = HF5H	16 = 5949
17 = 1991	17 = 39HP

Table 8-8. SA Program Loop 2:15

PCA: A11 Signatures take approx. 30 secs. to stabilize

This test is for U204 only.

Test Condition: Same as for loop 2 except:

A11S406 Position 15

Signature Analyzer Connections on A11: Same as for loop 2

Qualifiers= Same as for loop 2

Signatures= same as for loop 2

Replaced

Table 8-9. SA Program Loop 3a

PCA: A11

Test Conditions: Set A11TP2 to NORMAL position and remove A11JU602

A11S406 Position 3

OPEN

Signature Analyzer Connections on A11:				Checks:
START	ST2	TP1-7	Rising	Bank Select Clock
STOP	SP2	TP1-8	Falling	LED Driver Circuitry
CLOCK	CLK1	TP1-1	Rising	Graphics RAM (A13) enable

+5 v reference = C6FF

U301 - 1 = 4859	U703 - 2 = 8523	U706 - 3 = 9PC8
2 = UP95	3 = 2680	5 = FA2C
3 = UP95	4 = 235A	7 = 28C3
4 = 4859	5 = 38A5	12 = 38A5
	6 = 9PC8	14 = 235A
U401 -12 = U504	7 = FA2C	16 = 2680
	8 = 28C3	18 = 8523

Table 8-10. SA Program Loop 3a:15

PCA: A11 Signatures take approx. 30 secs. to stabilize

Test Conditions: Same as for loop 3a except:

A11S406 Position 15

OPEN

Signature Analyzer Connections on A11: Same as for loop 3a

+5 v reference = 4U73

U301 - 1 = 271A	U703 - 2 = 7FP7	U706 - 3 = PP75
2 = 6869	3 = C1A9	5 = A0CH
3 = 6869	4 = F6A0	7 = 98UA
4 = 271A	5 = H516	12 = H516
	6 = PP75	14 = F6A0
U401 -12 = P8CA	7 = A0CH	16 = C1A9
	8 = 98UA	18 = 7FP7

Table 8-11. SA Program Loop 3b

PCA: A11

Test Conditions: Set A11TP2 to NORMAL position and remove A11JU602

A11S406 Position 3

OPEN

Signature Analyzer Connections on A11:				Checks:
START/STOP	ST2	TP1-7	Rising/Falling	Programmable Timer
QUALIFIER	As noted below		Low Level	Bank Select Circuit
CLOCK	CLK1	TP1-1	Rising	PIA

Note: Cycle power when changing qualifier

Qualifier= U606-15	Qualifier= U607-1	Qualifier = U703-23
+5 v ref.= C1CA	+5 v ref.= 00UP	+5 v reference = 5669
U606 -10 = C2CH	U607 - 2 = 007U	U703 -26 = P75P
11 = 6594	5 = 00CP	27 = 0A0C
12 = 4C84	6 = 00HP	28 = 8H6A
18 = 003U	9 = 00PP	29 = 403H*
19 = U9U3	12 = 00U6	30 = 9146*
20 = 3798	15 = 00UA	31 = 67H7*
21 = 8C32	16 = 00UF	32 = UH72
22 = 2F4U	19 = 00UU	33 = 45C3*
23 = U51C		35 = 106H
24 = C1U1		36 = 103F
25 = F681		

* Cycle power if these signatures are different.

Table 8-12. SA Program Loop 3b:15

PCA: A11 Signatures take approx. 30 secs. to stabilize

Test Conditions: Same as for loop 3b except:

A11S406 Position 15

OPEN

Signature Analyzer Connections on A11: Same as for loop 3b

For qualifier = U606-15 and U703-23 + 5 v ref. and signatures are the same as for loop 3b

For qualifier= U607-1 +5 v ref. = 600H

U607- 2 = F559	U607- 12 = P1PC
5 = 8H7A	15 = 96C6
6 = 5CUC	16 = UHU6
9 = 31A6	19 = F8H8

Table 8-13. SA Program Loop 3c

PCA: A13

Test Condition: Set A11TP2 to NORMAL and remove A11JU602

A11S406 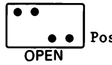 Position 3

OPEN

Signature Analyzer Connections on A11 and A13:				Checks:
START/STOP	A11 ST2	TP1-7	Rising/Falling	CRTC
QUALIFIER	A13 U702-25	CS	Low Level	
CLOCK	A11 CLK1	TP1-1	Rising	

+5 v reference=5669 * = Not blinking

U702-18 = 0000*	U702 -28 = 0257	With a scope check HSYNC
19 = 0000*	29 = 95P8	U702-39 for:
21 = 0000	30 = 446U	high time = 15 usec.
22 = PP2U	31 = C0C8	low time = 235 usec.
23 = 5669	32 = 8567	
24 = 683H	33 = H97C	
26 = 0000	40 = 0000*	
27 = 0009		

Table 8-14. SA Program Loop 3c:15

PCA: A13 Signatures take approx. 30 secs. to stabilize

Test Condition: Same as for loop 3c except:

A11S406 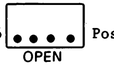 Position 15

OPEN

Signature Analyzer Connections on A11 and A13: Same as for loop 3c

Signatures = same as for loop 3c

Table 8-9. SA Program Loop 3a

PCA: A11

Test Conditions: Set A11TP2 to NORMAL position and remove A11JU602

A11S406 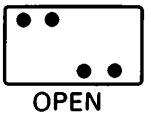 Position 3

OPEN

Signature Analyzer Connections on A11:				Checks:
START	ST2	TP1-7	Rising	Bank Select Clock
STOP	SP2	TP1-8	Falling	LED Driver Circuitry
CLOCK	CLK1	TP1-1	Rising	Graphics RAM (A13) enable

+5 v reference = AHC3

U301 - 1 = 4859	U703 - 2 = 0ACC	U706 - 3 = 1120
2 = P5PA	3 = A918	5 = 45C3
3 = P5PA	4 = AFF2	7 = A72C
4 = 4859	5 = C73H	12 = C73H
	6 = 1120	14 = AFF2
U401 -12 = PP7C	7 = 45C3	16 = A918
	8 = A72C	18 = 0ACC

Table 8-10. SA Program Loop 3a:15

PCA: A11 Signatures take approx. 30 secs. to stabilize

Test Conditions: Same as for loop 3a except:

A11S406 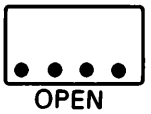 Position 15

OPEN

Signature Analyzer Connections on A11: Same as for loop 3a

+5 v reference = 53HF

U301 - 1 = 39H3	U703 - 2 = C39A	U706 - 3 = 2108
2 = 6A0U	3 = 7PH4	5 = 6UF0
3 = 6A0U	4 = 09HH	7 = 5787
4 = 39H3	5 = 1A6C	12 = 1A6C
	6 = 2108	14 = 09HH
U401 -12 = U415	7 = 6UF0	16 = 7PH4
	8 = 5787	18 = C39A

Table 8-15. SA Program Loop 4

PCA: A12

Test Condition: Set A11TP2 to NORMAL position and remove A11JU602

A11S406 Position 4

OPEN

Signature Analyzer Connections on A11:				Checks:
START/STOP	ST2	TP1-3	Rising/Falling	A12 Main ROM
QUALIFIER	As noted below		Low Level	
CLOCK	CLK1	TP1-1	Rising	

+5 v reference = 1180 Note: Cycle power when changing qualifier

Qualifier= U100-20		Qualifier= U200-20	
U100 -11 =	P142	U200 -11 =	50C5
12 =	480A	12 =	6F25
13 =	2A6U	13 =	A8A6
15 =	01H1	15 =	9532
16 =	8P23	16 =	8C60
17 =	C429	17 =	0938
18 =	9UF2	18 =	HF19
19 =	U3H2	19 =	P899

Table 8-16. SA Program Loop 4:15

PCA: A12 Signatures take approx. 30 secs. to stabilize

Test Condition: Same as for loop 4 except:

A11S406 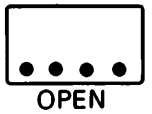 Position 15

OPEN

Signature Analyzer Connections on A11: same as for loop 4

Qualifiers= Same as for loop 4

Signatures= Same as for loop 4

Table 8-17. SA Program Loop 5

PCA: A12

Test Condition: Set A11TP2 to NORMAL position and remove A11JU602

A11S406 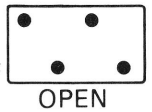 Position 5

OPEN

Signature Analyzer Connections on A11:

				Checks:
START/STOP	ST2	TP1-7	Rising/Falling	ROM Banks 1 & 2
QUALIFIER	As noted below		Low Level	
CLOCK	CLK1	TP1-1	Rising	

+5 v reference = 1180 Note: Cycle power when changing qualifier

Qualifier= U300-20		Qualifier= U400-20	
U300 -11 =	7073	U400 -11 =	5035
12 =	0CPP	12 =	135P
13 =	67CU	13 =	8235
15 =	4U87	15 =	7834
16 =	8C29	16 =	9414
17 =	2417	17 =	P99P
18 =	1AFC	18 =	669F
19 =	F81P	19 =	CF82

Table 8-18. SA Program Loop 5:15

PCA: A12 Signatures take approx. 30 secs. to stabilize

Test Condition: Same as for loop 5 except:

A11S406 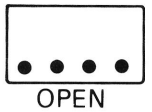 Position 15

OPEN

Signature Analyzer Connections on A11: Same as for loop 5

Qualifiers= Same as for loop 5

Signatures= Same as for loop 5

Table 8-19. SA Program Loop 6

PCA: A12

Test Condition: Set A11TP2 to NORMAL position and remove A11JU602

A11S406 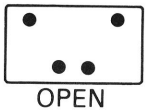 Position 6

OPEN

Signature Analyzer Connections on A11:

				Checks:
START/STOP	ST2	TP1-7	Rising/Falling	ROM Banks 3 & 4
QUALIFIER	As noted below		Low Level	
CLOCK	CLK1	TP1-1	Rising	

+5 v reference = 1180 Note: Cycle power when changing qualifier

Qualifier=U102-20 U202 not used at this time.

U102-11 = CP3H
12 = 572U
13 = 3054
15 = 6CFA
16 = 35F3
17 = 3APU
18 = 901U
19 = 1U83

Table 8-20. SA Program Loop 6:15

PCA: A12 Signatures take approx. 30 secs. to stabilize

Test Condition: Same as for loop 6 except:

A11S406 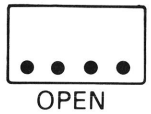 Position 15

OPEN

Signature Analyzer Connections on A11: same as for loop 6

Qualifiers= Same as for loop 6

Signatures= Same as for loop 6

Table 8-21. SA Program Loop 7

PCA: A12

Test Condition: Set A11TP2 to NORMAL position and remove A11JU602

A11S406 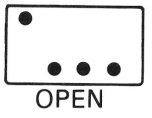 Position 7

Signature Analyzer Connections on A11:				Checks:
START/STOP	ST2	TP1-7	Rising/Falling	ROM Banks 5 & 6
QUALIFIER	As noted below		Low Level	
CLOCK	CLK1	TP1-1	Rising	

+5 v reference = 1180 Note: Cycle power when changing qualifier

Qualifier=U302-20 U104 not used at this time.

U302-11 = C9P5
12 = 4087
13 = 4352
15 = 3U1A
16 = HU40
17 = 9804
18 = H7UP
19 = 4C9F

Table 8-22. SA Program Loop 7:15

PCA: A12 Signatures take approx. 30 secs. to stabilize

Test Condition: Same as for loop 7 except:

A11S406 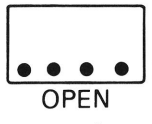 Position 15

Signature Analyzer Connections on A11: Same as for loop 7

Qualifiers= Same as for loop 7

Signatures= Same as for loop 7

Table 8-23. SA Program Loop 8

PCA: A12

Test Condition: Set A11TP2 to NORMAL position and remove A11JU602

A11S406 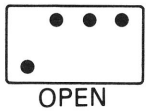 Position 8

OPEN

Signature Analyzer Connections on A11:				Checks:
START/STOP	ST2	TP1-7	Rising/Falling	ROM Bank 7
QUALIFIER	As noted below		Low Level	
CLOCK	CLK1	TP1-1	Rising	

+5 v reference = 1180

U204 not used at this time.

Table 8-24. SA Program Loop 9

PCA: A10

Test Condition: A10S100 (C1) to NORM, A10S100 (C2) to NORM
A11TP2 in NORMAL position and A11JU602 removed.

A11S406 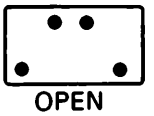 Position 9

OPEN

Signature Analyzer Connections on A10 and A11:

START/STOP	A11 ST2	TP1-7	Rising/Falling	Checks:
QUALIFIER	A10 503-18	MCS	Low Level	System access
CLOCK	A11 CLK1	TP1-1	Rising	of Shared RAM

+5 v reference = 2131

U503 - 1 =	U7U2	U503 - 13 =	A3F6
2 =	6012	14 =	0588
3 =	P403	15 =	8F6U
4 =	61CU	16 =	HF5H
5 =	CCA4	17 =	1991
6 =	1U3P	19 =	1HPF
7 =	PFHP	20 =	POPU
8 =	5UA5	21 =	F1HP
9 =	U39U	22 =	4A64
10 =	7060	23 =	CC82
11 =	52P6		

Table 8-25. SA Program Loop 9:15

PCA: A10 Signatures take approx. 30 secs. to stabilize

Test Condition: Same as for loop 9 except:

A11S406 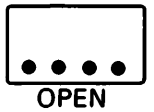 Position 15

OPEN

Signature Analyzer Connections on A10 and A11: same as for loop 9

Qualifier = Same as for loop 9

Signatures= Same as for loop 9

Table 8-26. SA Program Loop 10

PCA: A12

Test Condition: Set A11TP2 to NORMAL position and remove A11JU602

A11S406 Position 10

OPEN

Signature Analyzer Connections on A11:				Checks:
START/STOP	ST2	TP1-7	Rising/Falling	RAM
QUALIFIER	As noted below		Low Level	Non-Volative RAM
CLOCK	CLK1	TP1-1	Rising	

Note: Signatures are slow to stabilize; cycle power when changing qualifier.

Qualifier= U106-8	Qualifier= U402-18	Qualifier= U500-18
+5 v ref.= 08A1	+5 v ref.= 2131	+5 v ref.= 2131
U106- 11 = 3811	U402 - 9 = U39U	U500-9 = U39U
12 = 0455	10 = 7060	10 = 7060
13 = H418	11 = 52P6	11 = 52P6
14 = AF03	13 = A3F6	13 = A3F6
	14 = 0588	14 = 0588
Qualifier= U107-8	15 = 8F6U	15 = 8F6U
+5 v ref.= 08A1	16 = HF5H	16 = HF5H
U107- 11 = 538C	17 = 1991	17 = 1991
12 = P081		
13 = 1HC8	Qualifier=U404-18	
14 = 4CFA	+5 v ref.= 2131	
	U404 - 9 = U39U	
	10 = 7060	
	11 = 5296	
	13 = A3F6	
	14 = 0588	
	15 = 8F6U	
	16 = HF5H	
	17 = 1991	

Table 8-27. SA Program Loop 10:15

PCA: A12 Signatures take approx. 30 secs. to stabilize

Test Condition: Same as for loop 10 except:

A11S406 Position 15

OPEN

Signature Analyzer Connections on A11: Same as for loop 10

Qualifiers= Same as for loop 10

Signatures= Same as for loop 10

Table 8-28. SA Program Loop 12a

PCA: A11

Test Conditions: Set A11TP2 to NORMAL position and remove A11JU602

A11S406 Position 12

OPEN

Signature Analyzer Connections on A11:				Checks:
START	ST2	TP1-7	Rising	Decoder Circuitry
STOP	SP2	TP1-8	Falling	for A13 RAM
CLOCK	CLK1	TP1-1	Rising	

+5 v reference= 3577

Note: Signals take approximately 30 seconds to stabilize.

U401 -12 =	322C
U601 - 4 =	763U
5 =	F60F
6 =	08C3
7 =	UF94
9 =	3C8P
10 =	78F6

Table 8-29. SA Program Loop 12a:15

PCA: A11 Signatures take approx. 30 secs. to stabilize

Test Conditions: Same as for loop 12a except:

A11S406 Position 15

OPEN

Signature Analyzer Connections on A11: Same as for loop 12a

+5 v reference= 4U73

U401 -12 =	P8CA
U601 - 4 =	C1F4
5 =	HUH0
6 =	05UP
7 =	3294
9 =	1OH2
10 =	A2UA

Table 8-30. SA Program Loop 12b

PCA: A13

Test Condition: Set A11TP2 to NORMAL position and remove A11JU602

A11S406 Position 12

OPEN

Signature Analyzer Connections on A11 and A13:				Checks: System
START/STOP	A11 ST2	TP1-7	Rising/Falling	access of
QUALIFIER	A13 as noted below		Low Level	display RAM
CLOCK	A11 C1K1	TP1-1	Rising	attribute RAM
				character RAM

Note: Very slow stabilization of signatures
Cycle power when changing qualifier

Qualifier = U405-19	Qualifier = 605-19	Qualifier = 705-19
+5 v ref. = F0CA	+5 v ref. = 08A1	+5 v ref. = 08A1
U405-11 = P0P7	U605- 2 = 3811	U705- 2 = 3811
12 = U9U8	3 = 0455	3 = 0455
13 = 1042	4 = H418	4 = H418
14 = C3F2	5 = AF03	5 = AF03
15 = 6756	6 = 538C	6 = 538C
16 = HPF2	7 = P081	7 = P081
17 = 3C05	8 = 1HC8	8 = 1HC8
18 = HP58	9 = 4CFA	9 = 4CFA

Qualifier=U102-18	For Qualifiers = U203-18
+5 reference=2131	U205-18
	U206-18
	U305-18
U102- 9 = U39U	U306-18
10 = 7060	+5 v ref. = same as for U102
11 = 52P6	Signatures= same as for U102
13 = A3F6	
14 = 0588	
15 = 8F6U	
16 = HF5H	
17 = 1991	

Table 8-31. SA Program Loop 12b:15

PCA: A13 Signatures take approx. 30 secs. to stabilize

Test Condition: Same as for loop 12b except:

A11S40 Position 15

OPEN

Signature Analyzer Connections on A11 and A13: same as for loop 12b

Qualifiers= same as for loop 12b

Signatures= same as for loop 12b

Table 8-32. SA Program Loop 13a

PCA: A13

Test Condition: Set A11TP2 to NORMAL position and remove A11JU602

A11S406 Position 13

OPEN

Signature Analyzer Connections on A13:				Checks:	CRTC access
START	VSYNC	TP1	Rising		character RAM
STOP	VSYNC	TP1	Rising		attribute RAM
CLOCK	L/S	TP1	Rising		

+5 v reference= C3A5

* = Not blinking

U200-5 = 0000	U503-9 = 0000	U801-6 = CP9A
10 = F97P	10 = 0000	7 = CP9A
11 = 86AF	11 = 0000	9 = 7F8U
12 = U2FU	13 = 0000	10 = 7F8U
13 = A3HC	14 = 0000	12 = FUUA
14 = 6697	15 = C3A5*	13 = FUUA
15 = FCU4	16 = C3A5*	
	17 = C3A5*	U802-3 = 50C4
U302-4 = AU1C		4 = 50C4
7 = A572	U702-4 = HH39	6 = CF6H
9 = 34HH	5 = 8CA8	7 = CF6H
12 = 929H	6 = 13AA	9 = C25P
	7 = 74U6	10 = C25P
U400-6 = 5114	8 = CF6H	12 = 89UA
7 = 5114	9 = 50C4	13 = 89UA
9 = 4UH2	10 = 89UA	
10 = 4UH2	11 = C25P	U803-3 = 74U6
12 = PP83	12 = 7F8U	4 = 74U6
13 = PP83	13 = FUUA	6 = 8CA8
	18 = U499	7 = 8CA8
U402-4 = 0255	19 = 0000*	9 = HH39
7 = 3972	21 = 0000	10 = HH39
9 = A992	23 = 0000	12 = 13AA
12 = 9794	25 = C3A5	13 = 13AA
	26 = C3A5	
U501-9 = 3972	27 = C3A5	
10 = 0255	28 = C3A5	
11 = 9794	29 = C3A5	
13 = A992	30 = C3A5	
14 = 929H	31 = C3A5	
15 = 34HH	32 = C3A5	
16 = A572	33 = C3A5	
17 = AU1C	35 = 4UH2	
	36 = 5114	
	37 = PP83	
	38 = CP9A	

Table 8-33. SA Program Loop 13b

PCA: A13

Test Condition: Set A11TP2 to NORMAL and remove A11JU602

A11S406 Position 13

OPEN

Signature Analyzer Connections on A13:				Checks:
START/STOP	VSYNC	TP1	Rising/Rising	CRTC access
QUALIFIER	As Noted Below		Low Level	of display RAM
CLOCK	L/S	TP1	Rising	

+5v Reference= C8UP

Note: Cycle power when changing qualifier

Qualifier=U102-18	Qualifier=U206-18
U102-9 = 343H	U206-9 = 32C0
10 = 5148	10 = 7H50
11 = 6F4A	11 = C79A
13 = 2AP4	13 = 5P38
14 = 0560	14 = PCF0
15 = UF48	15 = HPC1
16 = 22F8	16 = 379P
17 = 7P33	17 = HA71
Qualifier=U203-18	Qualifier=U305-18
U203- 9 = P27U	U305-9 = PCAP
10 = 049A	10 = 18P8
11 = PAC0	11 = 9F53
13 = 1HU2	13 = 6A94
14 = C265	14 = 1H1A
15 = 43A2	15 = 5U98
16 = 8UF1	16 = A118
17 = UH6C	17 = U46H
Qualifier=U205-18	Qualifier=U306-18
U205- 9 = 4530	U306-9 = F0P3
10 = HFHC	10 = 0576
11 = H5U1	11 = P204
13 = HAPU	13 = C321
14 = U8A6	14 = P692
15 = 7C5F	15 = P0CH
16 = UP9A	16 = 8523
17 = 7APA	17 = C066

8-17. RECEIVER PROCESSOR

Table 8-34. A10 Free Run Loop A

PCA: A10

Test Conditions: Set A10S100(C1) to FREE RUN, A10S100(C2) to NORM

Signature Analyzer Connections on A10:				Checks:
START	A15	TP5	Rising	Receiver Address Bus
STOP	A15	TP5	Rising	Receiver Data Bus
CLOCK	PH2	TP3	Falling	Chip Select Circuit

+5 v reference = 0003

TP6 RD0 = 4HP1
TP7 RD1 = 447P
TP8 RD2 = 3AF3
TP9 RD3 = H29C
TP10 RD4 = 9485
TP11 RD5 = 1PA3
TP12 RD6 = 9595
TP13 RD7 = 4PU3

U103 - 7 = 2302
- 9 = F9CF
- 10 = 534H
- 11 = C9U1
- 12 = 1183
- 13 = 64HF
- 14 = 29A4
- 15 = 5FUA

U203 - 3 = 6F9A
- 5 = U759
- 7 = 0356
- 9 = 1U5P
- 12 = P763
- 14 = 8484
- 16 = FFFF
- 18 = UUUU

U403 - 5 = 9UP1
- 7 = 4868
- 9 = 4FCA
- 12 = 6U28
- 14 = 37C5
- 16 = 6321
- 18 = 7791

Table 8-35. A10 SA Program Loop B

PCA: A10

Test Condition: A10S100 (C1) to NORM, A10S100 (C2) to SA PROGRAM

Signature Analyzer Connections on A10:

				Checks:
START	SA1	TP14	Falling	Shared RAM during
STOP	SA2	TP15	Falling	Receiver Access
CLOCK	PH2	TP3	Falling	

+5 v reference = 1CHH

TP6 RD0 = 61C6	U503 - 1 = 44AA	U503 - 14 = 7058
TP7 RD1 = AHH6	2 = A3C9	15 = 59C5
TP8 RD2 = 219F	3 = 07P1	16 = 1UCH
TP9 RD3 = PU96	4 = U543	17 = 0418
TP10 RD4 = UC7P	5 = APA5	18 = CUP5
TP11 RD5 = 5P12	6 = 5U5A	19 = U18A
TP12 RD6 = FC36	7 = P2C5	20 = 5U59
TP13 RD7 = AF42	8 = 86H6	21 = 4484
	9 = 94C8	22 = F03P
	10 = 8AU9	23 = H690
	11 = PH8H	
	13 = P2CH	

Table 8-36. A10 SA Program Loop C

PCA: A10

Test Condition: A10S100 (C1) to NORM, A10S100 (C2) to SA PROGRAM

Signature Analyzer Connections on A10:

				Checks:
START	SA1	TP14	Rising	ROM CD U507
STOP	SA2	TP15	Rising	
CLOCK	PH2	TP3	Falling	

+5 v reference = 07U3

TP6 RD0 = 109H
TP7 RD1 = 4AH5
TP8 RD2 = 4U84
TP9 RD3 = 29H5
TP10 RD4 = H01H
TP11 RD5 = 43C0
TP12 RD6 = 8UAU
TP13 RD7 = FAH6

Table 8-34. A10 Free Run Loop A

PCA: A10

Test Conditions: Set A10S100(C1) to FREE RUN, A10S100(C2) to NORM

Signature Analyzer Connections on A10:				Checks:
START	A15	TP5	Rising	Receiver Address Bus
STOP	A15	TP5	Rising	Receiver Data Bus
CLOCK	PH2	TP3	Falling	Chip Select Circuit

+5 v reference = 0003

TP6 RD0 = U601
TP7 RD1 = 254F
TP8 RD2 = PU08
TP9 RD3 = 2607
TP10 RD4 = P4F3
TP11 RD5 = 499A
TP12 RD6 = 298F
TP13 RD7 = H787

U103 - 7 = 2302
- 9 = F9CF
- 10 = 534H
- 11 = C9U1
- 12 = 1183
- 13 = 64HF
- 14 = 29A4
- 15 = 5FUA

U203 - 3 = 6F9A
- 5 = U759
- 7 = 0356
- 9 = 1U5P
- 12 = P763
- 14 = 8484
- 16 = FFFF
- 18 = UUUU

U403 - 5 = 9UP1
- 7 = 4868
- 9 = 4FCA
- 12 = 6U28
- 14 = 37C5
- 16 = 6321
- 18 = 7791

REPLACEMENT PAGE FOR 8-63 (FOR SN 2407A INSTRUMENTS ONLY)

Table 8-35.A10 SA Program Loop B

PCA: A10

Test Condition: A10S100 (C1) to NORM, A10S100 (C2) to SA PROGRAM

Signature Analyzer Connections on A10:				Checks:
START	SA1	TP14	Falling	Shared RAM during
STOP	SA2	TP15	Falling	Receiver Access
CLOCK	PH2	TP3	Falling	

+5 v reference = 1CHH

TP6 RD0 = 2HPH	U503 - 1 = 44AA	U503 - 14 = 7058
TP7 RD1 = 2745	2 = A3C9	15 = 59C5
TP8 RD2 = 2742	3 = 07P1	16 = 1UCH
TP9 RD3 = H696	4 = U543	17 = 0418
TP10 RD4 = 8PP3	5 = APA5	18 = CUP5
TP11 RD5 = 5AAH	6 = 5U5A	19 = U18A
TP12 RD6 = 7A15	7 = P2C5	20 = 5U59
TP13 RD7 = P9AF	8 = 86H6	21 = 4484
	9 = 94C8	22 = F03P
	10 = 8AU9	23 = H690
	11 = PH8H	
	13 = P2CH	

Table 8-36. A10 SA Program Loop C

PCA: A10

Test Condition: A10S100 (C1) to NORM, A10S100 (C2) to SA PROGRAM

Signature Analyzer Connections on A10:				Checks:
START	SA1	TP14	Rising	ROM CD U507
STOP	SA2	TP15	Rising	
CLOCK	PH2	TP3	Falling	

+5 v reference = 07U3

TP6 RD0 = 109H
TP7 RD1 = 7648
TP8 RD2 = 4U84
TP9 RD3 = 73A7
TP10 RD4 = 8A6U
TP11 RD5 = 43C0
TP12 RD6 = 8UAU
TP13 RD7 = FAH6

Table 8-37. A10 SA Program Loop D

PCA: A10

Test Condition: A10S100 (C1) to NORM, A10S100 (C2) to SA PROGRAM

Signature Analyzer Connections on A10:				Checks:
START	SA2	TP15	Rising	ROM AB U407
STOP	SA3	TP16	Rising	
CLOCK	PH2	TP3	Falling	

+5 v reference = P792

TP6 RD0 = 08U3
TP7 RD1 = HHAU
TP8 RD2 = 166U
TP9 RD3 = 3HA1
TP10 RD4 = U211
TP11 RD5 = 85U2
TP12 RD6 = 74U9
TP13 RD7 = 8U6A

Table 8-38. A10 SA Program Loop E

PCA: A10

Test Condition: A10S100 (C1) to NORM, A10S100 (C2) to SA PROGRAM

Signature Analyzer Connections on A10:				Checks:
START	SA2	TP15	Falling	Receiver RAM U405
STOP	SA3	TP16	Falling	
CLOCK	PH2	TP3	Falling	

+5 v reference = 2903

TP6 RD0 = 80PC
TP7 RD1 = A6H7
TP8 RD2 = U358
TP9 RD3 = 110C
TP10 RD4 = 2C55
TP11 RD5 = 9PF2
TP12 RD6 = 62CA
TP13 RD7 = 8857

Table 8-39. A10 SA Program Loop F

PCA: A10

Test Condition: A10S100 (C1) to NORM, A10S100 (C2) to SA PROGRAM

Signature Analyzer Connections on A10:				Checks:
START	SA3	TP16	Falling	Stack RAM U505
STOP	SA4	TP17	Falling	
CLOCK	PH2	TP3	Falling	

+5 v reference = 2131

TP6	RD0 = C422
TP7	RD1 = F144
TP8	RD2 = 4PP9
TP9	RD3 = 446F
TP10	RD4 = 969H
TP11	RD5 = U150
TP12	RD6 = UF6C
TP13	RD7 = 8225

Table 8-40. A10 SA Program Loop G

PCA: A10

Test Condition: A10S100 (C1) to NORM, A10S100 (C2) to SA PROGRAM

Signature Analyzer Connections on A10:				Checks:
START	SA3	TP16	Rising	ROM 89 U308
STOP	SA4	TP17	Rising	
CLOCK	PH2	TP3	Falling	

+5 v reference = P733

TP6	RD0 = 0240
TP7	RD1 = 8UU3
TP8	RD2 = 80C8
TP9	RD3 = U06C
TP10	RD4 = 190F
TP11	RD5 = 38U1
TP12	RD6 = 222C
TP13	RD7 = 3U08

Table 8-37. A10 SA Program Loop D

PCA: A10

Test Condition: A10S100 (C1) to NORM, A10S100 (C2) to SA PROGRAM

Signature Analyzer Connections on A10:				Checks:
START	SA2	TP15	Rising	ROM AB U407
STOP	SA3	TP16	Rising	
CLOCK	PH2	TP3	Falling	

+5 v reference = P792

TP6 RD0 = 08U3
TP7 RD1 = CUP2
TP8 RD2 = 166U
TP9 RD3 = CFC2
TP10 RD4 = 7302
TP11 RD5 = 85U2
TP12 RD6 = 74U9
TP13 RD7 = 8U6A

Table 8-38. A10 SA Program Loop E

PCA: A10

Test Condition: A10S100 (C1) to NORM, A10S100 (C2) to SA PROGRAM

Signature Analyzer Connections on A10:				Checks:
START	SA2	TP15	Falling	Receiver RAM U405
STOP	SA3	TP16	Falling	
CLOCK	PH2	TP3	Falling	

+5 v reference = 2903

TP6 RD0 = 0397
TP7 RD1 = 6H08
TP8 RD2 = F430
TP9 RD3 = H776
TP10 RD4 = 7P0H
TP11 RD5 = F723
TP12 RD6 = APH4
TP13 RD7 = F245

BRYAN FIELDS, W9CR

Table 8-39. A10 SA Program Loop F

PCA: A10

Test Condition: A10S100 (C1) to NORM, A10S100 (C2) to SA PROGRAM

Signature Analyzer Connections on A10:				Checks:
START	SA3	TP16	Falling	Stack RAM U505
STOP	SA4	TP17	Falling	
CLOCK	PH2	TP3	Falling	

+5 v reference = 2131

TP6	RD0 = 92P8
TP7	RD1 = FUHF
TP8	RD2 = 695C
TP9	RD3 = 4518
TP10	RD4 = F4A8
TP11	RD5 = H120
TP12	RD6 = P2P0
TP13	RD7 = C0PU

Table 8-40. A10 SA Program Loop G

PCA: A10

Test Condition: A10S100 (C1) to NORM, A10S100 (C2) to SA PROGRAM

Signature Analyzer Connections on A10:				Checks:
START	SA3	TP16	Rising	ROM 89 U308
STOP	SA4	TP17	Rising	
CLOCK	PH2	TP3	Falling	

+5 v reference = P733

TP6	RD0 = 8P4P
TP7	RD1 = 0U64
TP8	RD2 = H2H8
TP9	RD3 = CP43
TP10	RD4 = 51U0
TP11	RD5 = CF34
TP12	RD6 = CCAA
TP13	RD7 = 3369

Table 8-41. A10 SA Program Loop H

PCA: A10

Test Condition: A10S100 (C1) to NORM, A10S100 (C2) to SA PROGRAM

Signature Analyzer Connections on A10:				Checks:
START	SA4	TP17	Rising	ROM 67 U307
STOP	SA5	TP18	Rising	
CLOCK	PH2	TP3	Falling	

+5 v reference = 251A

TP6 RD0 = 38PA
TP7 RD1 = 71A0
TP8 RD2 = 1363
TP9 RD3 = 0H69
TP10 RD4 = H853
TP11 RD5 = C21F
TP12 RD6 = 2P14
TP13 RD7 = 8HFA

Table 8-42. A10 SA Program Loop I

PCA: A10

Test Condition: A10S100 (C1) to NORM, A10S100 (C2) to SA PROGRAM

Signature Analyzer Connections on A10:				Checks:
START	SA4	TP17	Falling	Receiver Peirpheral
STOP	SA5	TP18	Falling	Data Bus
CLOCK	PH2	TP3	Falling	Receiver Peripheral Address Bus REN, LREN, RR/W

+5 v reference = APU2

U500 - 5 = 1446

U600 - 4 = 1CC6

U605 - 7 = 10HU
9 = UC20
12 = PAH3
14 = 96H1
16 = U413
18 = 1143

U700 - 8 = C544

U705 -11 = H4AA
12 = 2422
13 = 4300
14 = PC65
15 = F5A0
16 = 49F1
17 = 0422
18 = 8077

Table 8-43. A10 SA Program Loop J

PCA: A10

Test Condition: A10S100 (C1) to NORM, A10S100 (C2) to SA PROGRAM

Signature Analyzer Connections on A10:				Checks:
START	SA5	TP18	Rising	ROM 45 U306
STOP	SA6	TP19	Rising	
CLOCK	PH2	TP3	Falling	

+5 v reference = 672A

TP6	RD0	=	78U5
TP7	RD1	=	2A3P
TP8	RD2	=	3CH3
TP9	RD3	=	4177
TP10	RD4	=	H2FH
TP11	RD5	=	648P
TP12	RD6	=	6FF7
TP13	RD7	=	U655

Table 8-41. A10 SA Program Loop H

PCA: A10

Test Condition: A10S100 (C1) to NORM, A10S100 (C2) to SA PROGRAM

Signature Analyzer Connections on A10:

				Checks:
START	SA4	TP17	Rising	ROM 67 U307
STOP	SA5	TP18	Rising	
CLOCK	PH2	TP3	Falling	

+5 v reference = 251A

TP6 RD0 = 1C55
TP7 RD1 = 6866
TP8 RD2 = CPH9
TP9 RD3 = 66H5
TP10 RD4 = F224
TP11 RD5 = 2PCH
TP12 RD6 = 8593
TP13 RD7 = 1AA3

Table 8-42. A10 SA Program Loop I

PCA: A10

Test Condition: A10S100 (C1) to NORM, A10S100 (C2) to SA PROGRAM

Signature Analyzer Connections on A10:

				Checks:
START	SA4	TP17	Falling	Receiver Peirpheral
STOP	SA5	TP18	Falling	Data Bus
CLOCK	PH2	TP3	Falling	Receiver Peripheral Address Bus REN, LREN, RR/W

+5 v reference = APU2

U500 - 5 = 1446

U600 - 4 = 1CC6

U605 - 7 = 10HU
9 = UC20
12 = PAH3
14 = 96H1
16 = U413
18 = 1143

U700 - 8 = C544

U705 -11 = H4AA
12 = 2422
13 = 4300
14 = PC65
15 = F5A0
16 = 49F1
17 = 0422
18 = 8077

REPLACEMENT PAGE FOR 8-67 (FOR SN 2407A INSTRUMENTS ONLY)

Table 8-43. A10 SA Program Loop J

PCA: A10

Test Condition: A10S100 (C1) to NORM, A10S100 (C2) to SA PROGRAM

Signature Analyzer Connections on A10:				Checks:
START	SA5	TP18	Rising	ROM 45 U306
STOP	SA6	TP19	Rising	
CLOCK	PH2	TP3	Falling	

+5 v reference = 672A

TP6 RD0 = 645C
TP7 RD1 = 05P5
TP8 RD2 = UAH9
TP9 RD3 = 10A5
TP10 RD4 = 2A4P
TP11 RD5 = PPFP
TP12 RD6 = 6U42
TP13 RD7 = 3424

Table 8-44. A10 SA Program Loop K

PCA: A10

Test Condition: A10S100 (C1) to NORM, A10S100 (C2) to SA PROGRAM

Signature Analyzer Connections on A10:				Checks:
START	SA6	TP19	Falling	ROM EF U607
STOP	SA1	TP14	Rising	
CLOCK	PH2	TP3	Falling	

+5 v reference = 55UF

TP6	RD0 = HFU6
TP7	RD1 = 1UFP
TP8	RD2 = UF09
TP9	RD3 = HHHU
TP10	RD4 = 8391
TP11	RD5 = 4UU1
TP12	RD6 = 3A44
TP13	RD7 = 695U

Table 8-45. A10 SA Program Loop L

PCA: A10

Test Condition: A10S100 (C1) to NORM, A10S100 (C2) to SA PROGRAM

Signature Analyzer Connections on A10:				Check:
START	SA6	TP19	Rising	ROM 23 U305
STOP	SA1	TP14	Falling	
CLOCK	PH2	TP3	Falling	

+5 v reference = 55UF

TP6	RD0 = 801H
TP7	RD1 = U9FU
TP8	RD2 = 4032
TP9	RD3 = 98CH
TP10	RD4 = 55A9
TP11	RD5 = 18CU
TP12	RD6 = CCFF
TP13	RD7 = 9F19

Table 8-44. A10 SA Program Loop K

PCA: A10

Test Condition: A10S100 (C1) to NORM, A10S100 (C2) to SA PROGRAM

Signature Analyzer Connections on A10:				Checks:
START	SA6	TP19	Falling	ROM EF U607
STOP	SA1	TP14	Rising	
CLOCK	PH2	TP3	Falling	

+5 v reference = 55UF

TP6 RD0 = HFU6
TP7 RD1 = 30UU
TP8 RD2 = UF09
TP9 RD3 = U91U
TP10 RD4 = A751
TP11 RD5 = 4UU1
TP12 RD6 = 3A44
TP13 RD7 = 695U

Table 8-45. A10 SA Program Loop L

PCA: A10

Test Condition: A10S100 (C1) to NORM, A10S100 (C2) to SA PROGRAM

Signature Analyzer Connections on A10:				Check:
START	SA6	TP19	Rising	ROM 23 U305
STOP	SA1	TP14	Falling	
CLOCK	PH2	TP3	Falling	

+5 v reference = 55UF

TP6 RD0 = 2U61
TP7 RD1 = A774
TP8 RD2 = 4HFA
TP9 RD3 = 4918
TP10 RD4 = AH65
TP11 RD5 = U192
TP12 RD6 = CFHA
TP13 RD7 = 1H1P

Table 8-46. A9 Free Run Loop A

PCA: A9

Test Conditions: Insert jumpers: TST (above JU2), JU2 and JU4
Remove jumpers: JU1 and JU3

Signature Analyzer Connections on A9:			Checks:
START	P2A15	Rising	Transients Address Bus
STOP	P2A15	Rising	Decoder Output
CLOCK	P2Q	Falling	Start/Stop Bit for SA
+ 5 v reference = 0003			Program Loops

U102 -		U800 -		U900 -	
8	= UUUU	1	= CH3H	7	= 572A
9	= FFFF	2	= 9682	9	= 5FA4
10	= 8484	3	= 4FOH	10	= 729H
11	= P763	4	= 41U7	11	= FA7C
12	= 1U5P	5	= 78P0	12	= 29P1
13	= 0356	6	= F53A	13	= A789
14	= U759	7	= 908P	14	= 9P2C
15	= 6F9A	8	= 5PCP	15	= 78A3
16	= 7791	9	= U789		
17	= 6321	10	= 7F82		
18	= 37C5	11	= 8CH2		
19	= 6U28	13	= OAC8		
20	= 4FCA	14	= U898		
21	= 4868	15	= 9UOA		
22	= 9UP1	16	= O2P2		
23	= 0002	17	= P136		

U702 -9 = A6C8

Table 8-47. A9 Free Run Loop B

PCA: A9

Test Conditions: Insert jumpers: TST (ABOVE JU2), JU2
Remove jumpers: JU1, JU3, JU4

Signature Analyzer Connections on A9:			Checks:
START	P2A15	Rising	ROM Data Bus
STOP	P2A15	Rising	
CLOCK	P2Q	Falling	
+5 v reference = 0003			

U400 - 9 = 39A9
10 = 09PP
11 = 8U12
13 = CAC8
14 = 5691
15 = 3102
16 = 1136
17 = 43PC

Table 8-48. A9 SA Program Loop A

PCA: A9

Test Conditions: A10S100 (C1) to NORM, A10S100 (C2) to SA PROGRAM

Signature Analyzer Connections on A10:			Checks:
START	SA4	TP17 Falling	Address Comparator
STOP	SA5	TP18 Falling	Address Decoder
CLOCK	PH2	TP3 Falling	

+5 v reference = APU2 * =Non-blinking

U502 -		U802 -		U902 -	
3	= H4AA	1	= 1446	6	= OUO7
4	= 2422	2	= UC20	10	= 1OHU
7	= 4300	3	= PAH3	12	= 96H1
8	= PC65	4	= C544	13	= U413
13	= F5AO	10	= APU2*	15	= 1143
14	= 49F1	11	= 2U96		
17	= 0422	12	= APU2*		
18	= 8077	13	= 591C		
		14	= APU2*		
		15	= H778		

Table 8-49. A9 SA Program Loop B

PCA: A9

Test Conditions: Insert jumpers: JU1, JU4 (left)
Remove jumpers: TST (Above JU2), JU2, JU3

Signature Analyzer Connections on A9:			Checks:
START	P2/START	Falling	RAM Data U600
STOP	P2/STOP	Rising	
CLOCK	P2Q	Falling	

+5 v reference = 5F32
P2 R/W = HOHO

U303 -		U304 -		U600 -	
2	= P828	2	= 27U2	2	= 7185
5	= 4U74	5	= OC45	3	= U73U
6	= FC29	6	= 1AC8	4	= 5H48
9	= 79P9	9	= H328	5	= 278F
12	= A21C	12	= FU9F	6	= H2P5
15	= CP9A	15	= 7AU2	7	= 3FCA
16	= HUFU	16	= 6987	8	= 4P4A
19	= 34H3	19	= 5169	9	= CUF4

Table 8-50. A9 SA Program Loop C

PCA: A9

Test Conditions: Insert jumpers: JU1, JU4 (left)
Remove jumpers: TST (Above JU2), JU2, JU3

Signature Analyzer Connections on A9:			Checks:
START/STOP	P2/START	Falling /Rising	RAM Data
QUALIFIER	U600- 13	High Level	
CLOCK	P2Q	Falling	

+5 v reference = 0046
P2 R/W = 4174

U600 - 2 = A7FF
3 = PH42
4 = HU80
5 = O8F1
6 = 524H
7 = H4P8
8 = H7CO
9 = H63A

Table 8-51. A9 SA Program Loop D

PCA: A9

Test Conditions: Insert jumpers: JU1, JU4 (left)
Remove jumpers: TST (ABOVE JU2), JU2, JU3

Signature Analyzer Connections on A9:			Checks:
START/STOP	PS/START	Falling /Rising	Latch Data
QUALIFIER	As noted below	Low Level	
CLOCK	P2Q	Falling	

+5 v reference = CC34 Note: Cycle power when changing qualifier

Qualifier= U303-1		Qualifier= U304-1	
U303 - 3	= 2HH8	U304 - 3	= 2HH8
4	= P4C7	4	= P4C7
7	= FCHC	7	= FCHC
8	= C7F1	8	= C7F1
13	= UF4C	13	= UF4C
14	= OCH5	14	= OCH5
17	= PU8P	17	= PU8P
18	= HH7H	18	= HH7H

Table 8-52. A8 SA Program Loop A

PCA: A8

Test Conditions: A10S100 (C1) to NORM, A10S100 (C2) to SA PROGRAM

Signature Analyzer Connections on A10:			Checks:
START	SA4	TP17 Falling	Address Comparator
STOP	SA5	TP18 Falling	Address Decoder
CLOCK	PH2	TP3 Falling	Input Control Latch

+5 v reference = APU2 * =Non-blinking

U204 -		U403 -	
3	= APU2*	2	= 1446
U303 - 2	= OH8A	3	= PAH3
3	= H4AA	4	= C544
4	= 2422	7	= APU2*
5	= 9499	12	= APU2*
6	= 8C79	14	= 4C7C
7	= 4300	U503 - 6	= P589
8	= PC65	10	= 1OHU
9	= 0724	12	= 96H1
12	= 8C1U	13	= U413
13	= F5AO	15	= 1143
14	= 49F1		
15	= CU2U		
16	= 4C8F		
17	= 0422		
18	= 8077		
19	= 09H6		

Table 8-53. A8 SA Program Loop B

```
PCA: A8

Test Conditions: Remove A9 jumpers TST, JU2, and JU3

Signature Analyzer Connections on A9:          Checks:
    START      P2-START    Falling             Input Latch for Data
    STOP       P2-STOP     Rising              Transients
    CLOCK      P2-Q        Falling

+5 v reference = 5F32
```

```
U501 - 2 = 7634
       5 = FPC7
       6 = 47CP
       9 = 66C8
      12 = U732
      15 = 898F
      16 = H454
      19 = CC0U
```

Table 8-54. A8 SA Program Loop C

```
PCA: A8

Test Conditions: Remove A9 jumpers TST, JU2, and JU3

Signature Analyzer Connections on A8 and A9:     Checks:
  START/STOP  A9 P2-START   Falling/Rising       Input Latch for Data
  QUALIFIER   A8 U501-1     Low Level            Transients
  CLOCK       A9 P2-Q       Falling

+5 v reference = CC34
```

```
U501 - 2 = 96PF
       5 = 725C
       6 = P5PH
       9 = 5CP0
      12 = 7P25
      15 = 85PA
      16 = 77F7
      19 = 6PCP
```

Table 8-55. A1 SA Program Loop A

PCA: A1

Test Conditions: A10S100 (C1) to NORM, A10S100 (C2) to SA PROGRAM

Signature Analyzer Connections on A10:				Checks:
START	SA4	TP17	Falling	Address Comparator
STOP	SA5	TP18	Falling	Address Decoder
CLOCK	PH2	TP3	Falling	Data Bus Decoder

+5 v reference = APU2

U500 - 7 = HC59	U600 -11 = C544	U800 - 1 = 1446
9 = HCHF	12 = 3FAF	2 = UC20
10 = 6P26	13 = 0422	3 = PAH3
11 = 8335	14 = 8077	4 = C544
12 = 074P	15 = A040	13 = 24PA
13 = P768	16 = 379F	15 = UH19
14 = C629	17 = 2422	
15 = 1C99	18 = H4AA	U900 - 6 = H9U3
	19 = H705	10 = 10HU
U600 - 2 = H40H		12 = 96H1
3 = 4300	U700 - 2 = 6259	13 = U413
4 = PC65	5 = PP58	15 = 1143
5 = 72CA	6 = 260A	
6 = 1F89	9 = 2786	
7 = F5A0	12 = 7CC8	
8 = 49F1	15 = IF79	
9 = A000		

Table 8-56. A2 SA Program Loop A

PCA: A2

Test Conditions: A10S100 (C1) to NORM, A10S100 (C2) to SA PROGRAM

Signature Analyzer Connections on A10:				Checks:
START	SA4	TP17	Falling	Address Comparator
STOP	SA5	TP18	Falling	Input Control Latch
CLOCK	PH2	TP3	Falling	

+5 v reference = APU2

U604 - 6 = 6072	U705 - 2 = 760U	U705 -12 = 148H
	3 = 8077	13 = H4AA
U704 - 6 = FP80	4 = 0422	14 = 2422
10 = 10HU	5 = U0H7	15 = 95FP
12 = 96H1	6 = HICP	16 = HAPH
13 = U413	7 = 49F1	17 = 4300
15 = 1143	8 = F5A0	18 = PC65
	9 = 2F39	19 = F7H2
	11 = C544	

Table 8-57. A3 SA Program Loop A

PCA: A3

Test Conditions: A10S100 (C1) to NORM, A10S100 (C2) to SA PROGRAM

Signature Analyzer Connections on A10:				Checks:
START	SA4	TP17	Falling	Address Comparator
STOP	SA5	TP18	Falling	Address Decoder
CLOCK	PH2	TP3	Falling	Input Control Latch

+5 V Reference = APU2

U702 - 3 = 5U82
6 = 09PP
8 = APU2
10 = 1446
11 = CAC4

U800 - 6 = A71F
10 = 10HU
12 = 96H1
13 = U413
15 = 1143

U803 - 2 = 33U9
3 = H4AA
4 = 2422
5 = UC5F
6 = 47IH
7 = PC65
8 = 4300
9 = U170
11 = C544

Table 8-58. A4 SA Program Loop A

PCA: A4

Test Conditions: A10S100 (C1) to NORM, A10S100 (C2) to SA PROGRAM

Signature Analyzer Connections on A10:				Checks:
START	SA4	TP17	Falling	Address Comparator
STOP	SA5	TP18	Falling	Address Decoder
CLOCK	PH2	TP3	Falling	Input Control Latch
				Input Data Latches

+5 v reference = APU2

*= non-blinking; signatures take approximately 10 secs to stabilize

U302 - 2 = 817F	U602 - 2 = U79U	U702 - 1 = 1446
5 = H53C	3 = H4AA	2 = UC20
6 = FOP8	4 - 2422	3 = PAH3
9 = UFH1	5 = 8F0H	4 = C544
12 = HPC2	6 = AH8H	9 = 0242
15 = HP86	7 = 4300	11 = FP6A
16 = UP1C	8 = PC65	13 = 4544
19 = FF02	9 = 3331	14 = APU2*
	12 = A30F	15 = HP60
U402 -16 = A341	13 = F5A0	
19 = 4791	14 = 49F1	U802 - 6 = 570F
	15 = 4P33	10 = 10HU
U502 - 2 = 8P85	16 = 9292	12 = 96H1
5 = 7H18	17 = 0422	13 = U413
6 = 64FU	18 = 8077	15 = 1143
9 = C524	19 = 01F0	
12 = 65A5		
15 = 951A		
16 = 33F7		
19 = F097		

Table 8-59. A5 SA Program Loop A

PCA: A5

Test Conditions: A10S100 (C1) to NORM, A10S100 (C2) to SA PROGRAM

Signature Analyzer Connections on A10:				Checks:
START	SA5	TP18	Falling	Programmable Counters
STOP	SA6	TP19	Falling	Data Latches
CLOCK	PH2	TP3	Falling	Comparator Circuit
				Control Status Latch
+5 v reference = 65H8		*= Not blinking		Counter Mode Counter

U104 - 3 = P5P0	U405 - 2 = 2418	U505 - 2 = 2418
6 = 65H8	3 = 6189	3 = 6FAH
8 = 0000*	4 = 9P45	4 = 9926
11 = 0000	5 = PHPF	5 = PHPF
	6 = 98PC	6 = 98PC
U105 - 2 = 0000	7 = A10H	7 = 7UFP
3 = 65H8	8 = 6037	8 = F74P
6 = 0000	9 = 9P56	9 = 9P56
10 = P5P0	12 = 124H	12 = 124H
11 = 8038	13 = 0000	13 = U3AC
	14 = 65H8	14 = 5F38
U204 - 7 = 65H8	15 = 7HP3	15 = 7HP3
	16 = C9PH	16 = C9PH
U205 - 3 = 0000	17 = 65H8	17 = 517P
6 = 65H8	18 = 0000	18 = 07UH
8 = P867	19 = CCFH	19 = CCFH
11 = 65H8		
	U406 - 3 = 124H	
U306 -11 = 6037	4 = 7HP3	U506 - 1 = 65H8
12 = A10H	5 = C9PH	3 = 2418
13 = 9P45	6 = CCFH	4 = PHPF
14 = 6189	11 = 07UH	5 = 98PC
15 = P5P0	12 = 517P	6 = 9P56
	13 = 5F38	11 = F74P
	14 = U3AC	12 = 7UF9
	15 = AA68	13 = 9926
		14 = 6FAH
		15 = 3178

Table 8-60. A5 SA Program Loop B

PCA: A5

Test Conditions: A10S100 (C1) to NORM, A10S100 (C2) to SA PROGRAM

Signature Analyzer Connections on A10:				Checks:
START	SA4	TP17	Falling	Address Comparator
STOP	SA5	TP18	Falling	Address Decoder
CLOCK	PH2	TP3	Falling	Control Lathes

+5 v reference = APU2

U605 - 2 = 32H2	U705 - 2 = U91F	U706 - 6 = 5F52
5 = 12C9	3 = H4AA	10 = 10HU
6 = 8HU7	4 = 2422	12 = 96H1
9 = 801P	5 = 8A4P	13 = U413
12 = 0P3A	6 = 9013	15 = 1143
15 = 8PF0	7 = 4300	
16 = 407H	8 = PC65	
19 = A9UH	9 = 7CPF	
	11 = C544	
U606 - 1 = 1446	13 = F5A0	
2 = UC20	14 = 49F1	
3 = PAH3	15 = 7730	
9 = 56F0	16 = 1207	
11 = 0A92	17 = 0422	
12 = APU2	18 = 8077	
13 = APU2	19 = AF40	
14 = APU2		
15 = APU2		

Table 8-61. A6 SA Program Loop A

PCA: A6

Test Conditions: A10S100 (C1) to NORM, A10S100 (C2) to SA PROGRAM

Signature Analyzer Connections on A10:				Checks:
START	SA4	TP17	Falling	Address Comparator
STOP	SA5	TP18	Falling	Address Decoder
CLOCK	PH2	TP3	Falling	Input Control Latch

+5 v reference = APU2

* =Non-blinking

U400 - 6 = F228
10 = 10HU
12 = 96H1
13 = U413
15 = 1143

U500 - 1 = UC20
2 = PAH3
3 = 1446
4 = C544
9 = APU2*
11 = APU2*
14 = 6FHA

U600 -11 = 1CC6

U700 - 2 = 10PA
3 = H4AA
4 = 2422
5 = 5805
6 = 9C52
7 = 4300
8 = PC65
9 = 68AP
12 = 68H5
13 = F5A0
14 = 49F1
15 = 0228
16 = 4U13
17 = 0422
18 = 8077
19 = 8308

Table 8-62. A7 SA Program Loop A

PCA: A7

Test Conditions: A10S100 (C1) to NORM, A10S100 (C2) to SA PROGRAM

Signature Analyzer Connections on A10:				Checks:
START	SA4	TP1	Falling	Address Comparator
STOP	SA5	TP18	Falling	Address Decoder
CLOCK	PH2	TP3	Falling	Input·Control Latch

+5 v reference = APU2 * =Non-blinking

U603 - 1 = 1446		U802 - 3 = 8077	
2 = UC20		4 = 0422	
3 = PAH3		7 = 49F1	
10 = APU2*		8 = F5A0	
12 = APU2*		9 = 37A9	
14 = APU2*		11 - C544	
15 = 685A		12 = CH79	
		13 = PC65	
U703 - 6 = F6A8		14 = 4300	
10 = 10HU		15 = F3F9	
12 = 96H1		16 = H632	
13 = U413		17 = 2422	
15 = 1143		18 = H4AA	
		19 = PF95	

8-18. INTERFACE TROUBLESHOOTING

Free Run I/O Troubleshooting

1. Plug the I/O module into Port 2. Set All S406 to an SA Program Loop position (Any position from 1-15).

2. Connect the signature analyzer as specified in the appropriate I/O module's Free Run SA table.

3. Switch the 4945A ON.

4. Remove the data bus jumper on the I/O module:
   JU501 on the 18162A
   JU201 on the 18163A
   JU403 on the 18165A

5. The following signals must be correct in order to perform SA on any of the I/O modules. Check for the signals listed below on the appropriate I/O module.

Signal Function	RS-232	HP-IB	HP-IL	Signal Conditions
XTAL freq	U401-2, 3	U301-2, 3	U501-2, 3	4 MHz
Addr. bit 15	U401 - 20	U301 - 20	U501 - 20	4.36 MHz
0	U401 - 40	U301 - 40	N/A	2 MHz
R/W	U401 - 7	U301 - 7	U501 - 7	High
Reset	U401 - 6	U301 - 6	U501 - 6	High
System Int.	U401 - 30	U301 - 30	U501 - 30	High
I/O Int.	U401 - 12	U301 - 12	U501 - 12	High

6. For all I/O modules, take the signatures listed under the appropriate Free Run SA Loop table to verify the I/O processor kernel.

   For RS-232 Only:
   If any of the data bus signatures are bad on JU201, remove RAM U202. With the power OFF, reinstall JU201, then switch the power ON and remove JU201. Take the signatures given in the W/O RAM column to determine if the RAM was causing the failure.

7. If no bad signatures are found, the problem could still be the input latch, output latch, address decoder or the status latch.

   The Free Run mode used during Free Run SA does not exercise all circuits. Check for stuck bits on the parts mentioned above, especially if error codes 820 through 824 or 920 through 924 are generated.

8. If the failure persists, refer to the specific I/O module troubleshooting procedure.

HP-IB SA Loop A

PCA: 18162A

Test Condition: Board All S406 in any position 1-15

Signature Analyzer Connections:

START	U202-3	IFC	Falling Edge
STOP	U202-3	IFC	Falling Edge
CLOCK	U202-2	REN	Rising Edge

+5 v Reference = H9A0

U101-31 = 04HH
32 = 362P
33 = H275
34 = 25PC
35 = 6P61
36 = 127C
37 = 3H17
38 = U478

U102- 2 = U478
3 = 362P
4 = H275
5 = 25PC
6 = 6P61
7 = 127C
8 = 3H17
9 = U478

Use scope to check for:

U202- 4 = high
5 = high
6 = high
7 = low going pulse every 25 msec.
8 = high going pulse every 25 msec.
9 = low going pulse every 25 msec.

HP-IB Free Run SA Loop

PCA: 18162A

Test Condition: Board All S406 in any position 1-15.
18162A jumper JU501 removed AFTER power on.

Signature Analyzer Connections:

START	U301-20	A15	Rising Edge
STOP	U301-20	A15	Rising Edge
CLOCK	U301-8	DS	Rising Edge

+5 v Reference = 0001 * = Not blinking

JU501- 1 = F2HF
2 = 5ACF
3 = 9U2U
4 = 66FC
5 = 25UA
6 = CC77
7 = H609
8 = 8P41

U502- 2 = UUUU
5 = 5555
6 = CCCC
9 = 7F7F
12 = 5H21
15 = 0AFA
16 = UPFH
19 = 52F8

U301-13 = HC89
14 = 2H70
15 = HPP0
16 = 1293
17 = HAP7
18 = 3C96
19 = 3827

U604- 4 = 4H79
5 = 5FU8
6 = 1181
7 = 4H79

U503- 3 = 0001*
5 = 0001*
6 = 0001*

RS232 Free Run SA Loop

PCA: 18163A

Test Condition: Board All S406 in any position 1-15.
Remove JU201 on 18163A AFTER power on.

Signature Analyzer Connections:

START	U401-20	A15	Rising Edge
STOP	U401-20	A15	Rising Edge
CLOCK	U401-8	DS	Rising Edge

+5 v Reference = 0001 * = Not Blinking

With RAM

JU201- 1 = A9C6
2 = 4290
3 = 33U8
4 = F6P9
5 = 23AP
6 = 76C6
7 = P69F
8 = 46H3

W/O RAM

JU201- 1 = A021
2 = 4290
3 = 3A6U
4 = F6P9
5 = 23AP
6 = 76C6
7 = P69F
8 = 46H3

U303- 2 = UUUU
5 = 5555
6 = CCCC
9 = 7F7F
12 = 5H21
15 = 0AFA
16 = UPFH
19 = 52F8

U401-13 = HC89
14 = 2H70
15 = HPP0
16 = 1293
17 = HAP7
18 = 3C96
19 = 3827

U403-20 = AUPP

U502- 7 = 4P0A
10 = 0996
11 = 0000

U503- 1 = 0001*
3 = 0001*
6 = 0996
11 = 0000
12 = 0000*

U504-12 = 0000
13 = 0001

HP-IL Free Run SA Loop

PCA: 18165A

Test Condition: Board All S406 in any position 1-15.
18165A Jumper JU403 removed AFTER power on.

Signature Analyzer Connections:

START	U501-20	A15	Rising Edge
STOP	U501-20	A15	Rising Edge
CLOCK	U501-8	DS	Rising Edge

+5 v Reference = 0001 * = Not Blinking

JU403-11 = HAC7
12 = 99A7
13 = F736
14 = U6CH
15 = 6U2F
16 = 5443
17 = 0AF8
18 = 591P

U501-13 = HC89
14 = 2H70
15 = HPP0
16 = 1293
17 = HAP7
18 = 3C96
19 = 3827

U503- 2 = UUUU
5 = 5555
6 = CCCC
9 = 7F7F
12 = 5H21
15 = 0AFA
16 = UPFH
19 = 52F8

U302- 4 = 4H79
5 = 5FU8
6 = 1181
7 = 4H79

U504- 3 = 0001*
6 = 0001*
8 = 0000
10 = 0000*

RS-232 Troubleshooting

1. Set board A11 S406 to an SA Program Loop position (Any position from 1 to 15).

2. Connect an RS-232 jumper connector (1251-0063) configured for loop back, to the interface RS-232 connector (See Figure below).

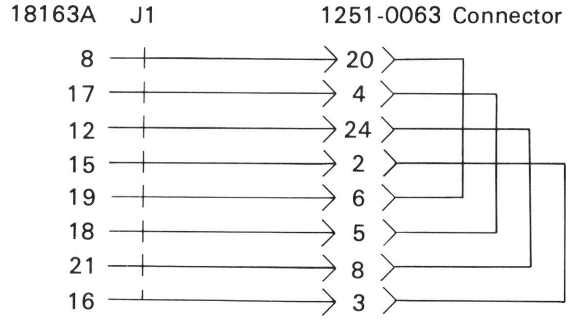

1251-0063 RS232 Loop Back Connector

3. Switch the 4945A ON.

4. Check the following signals on the serial I/O chip. Frequencies are approximate.

Check	Signal
U102 - 35 (MR)	Low
U102 - 16 (XTAL)	2 MHz
U102 - 30 (INTRPT)	Low
U102 - 14 (CS2)	45 kHz
U102 - 18 (DOSTR)	22 kHz
U102 - 2 (DISTR)	250 kHz

5. Check the RS-232 waveforms to verify the loop back path.

6. If all the above checks are good, the serial I/O chip may still be bad.

HP-IL Troubleshooting

1. Set board A11 S406 to an SA Program Loop position (Any position from 1 to 15).

2. Connect an HP-IL cable (8120-3383) to the interface HP-IL connector.

3. Switch the 4945A power ON.

4. Check the following signals on the HP-IL chip. Frequencies are approximate.

Check	Signal
U101 - 23, 24 (LC1,LC2)	475 to 550 nsec period
U101 - 27 (WR)	8 kHz
U101 - 26 (RD)	300 kHz
U101 - 28 (CS)	8 kHz

5. Check the HP-IL waveforms.

6. If all the above checks are good, the HP-IL chip may still be bad.

HP-IB Troubleshooting

1. Set board A11 S406 to an SA Program Loop (Any position from 1 to 15). Connect a Signature Analyzer as explained in the HP-IB SA Loop A table.

2. Switch the 4945A ON.

3. Check the following signals on the HP-IB chip. Frequencies are approximate.

Check	Signal
U101 - 9 (INT)	High
U101 - 19 (Reset)	High
U101 - 3 (CE)	45 kHz
U101 - 4 (WE)	45 kHz
U101 - 5 (DBIN)	45 kHz
U101 - 18 (O)	2 MHz
U202 - 2 (CLK for SA)	10 kHz
U202 - 3 (ST/SP for SA)	85 Hz

4. Take the signatures listed in the HP-IB SA Loop A. If all signatures are good, it is still possible that the HP-IB chip is bad.

   Note: There is a potential ESD problem with U102 and U202. If these parts are failing, this could be the cause.

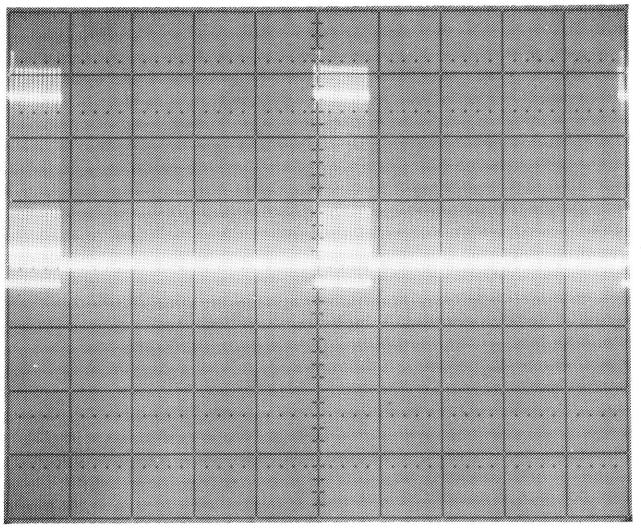

U101 - 18, T200 - 4

Horiz - 50 usec/div
Vert - 2 V/div

The period between bursts is 250 usec. Each burst is 48 usec.

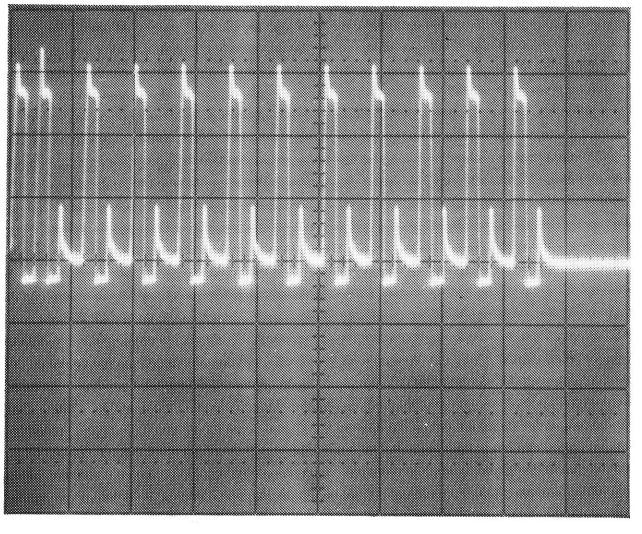

The following photo shows the burst expanded.

Horiz - 5 usec/div
Vert - 2 V/div

12 pulses per burst with a low time between pulses of 1 usec.

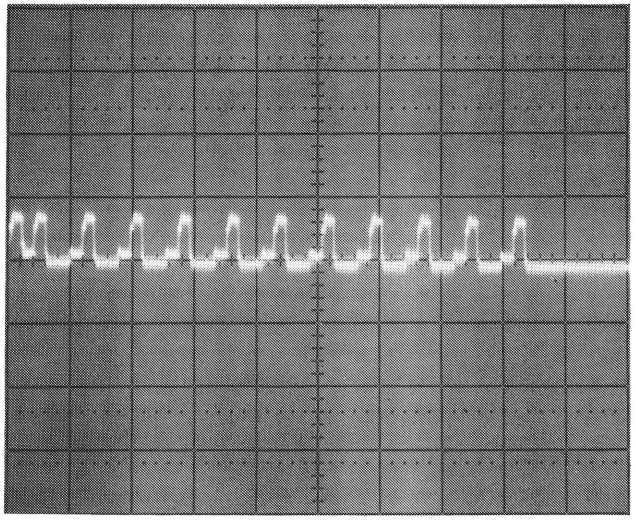

T200 pins 1, 2, 9 and 10

Horiz - 5 usec/div
Vert - 2 V/div

12 pulses, period is 4 usec

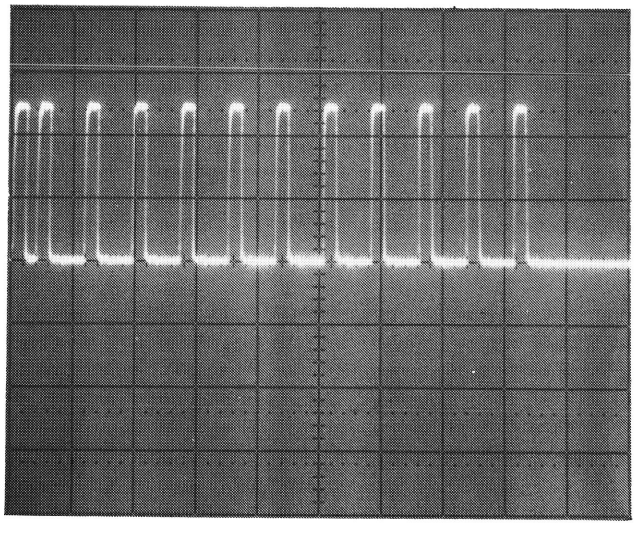

U101 pins 19 and 20

Horiz - 5 usec/div
Vert - 2 V/div

12 pulses, period is 4 usec

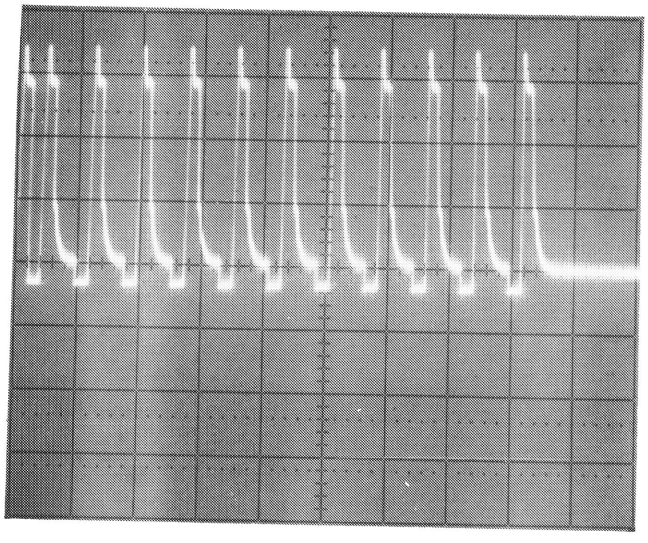

U101 - 17, T200 - 6

Horiz - 5 usec/div
Vert - 2 V/div

12 pulses, low time between pulses is 1 usec

RS-232 Waveforms

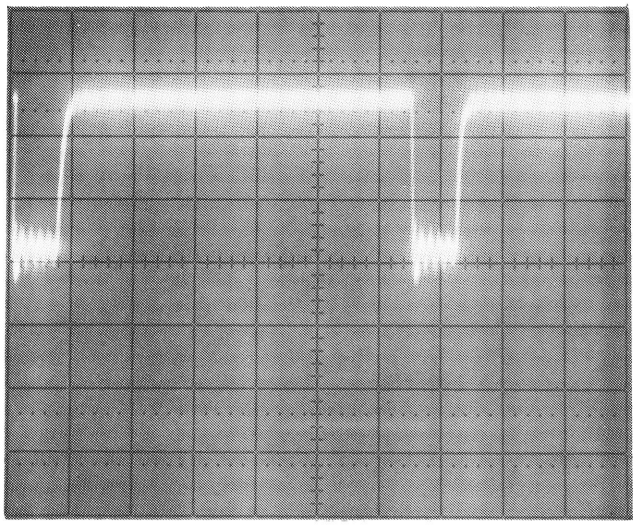

U102 - 15 (BAUD OUT), U102 - 9 (RCLK), U103 - 12 and 13
U102 - 38, U203 - 8

Horiz - 1 usec/div
Vert - 2 V/div

Period between pulses is 6.5 usec.
Pulse width is .8 usec.

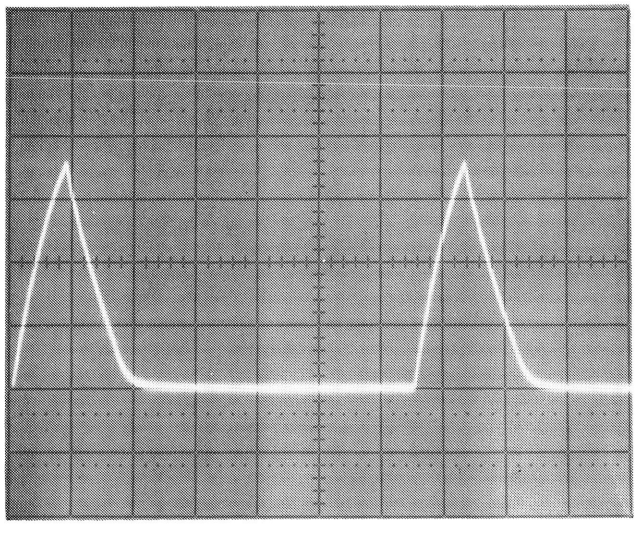

U103 - 11, U203 - 10

Horiz - 1 usec/div
Vert - 5 V/div

Period between pulses is 6.5 usec.
Pulse width is .8 usec.

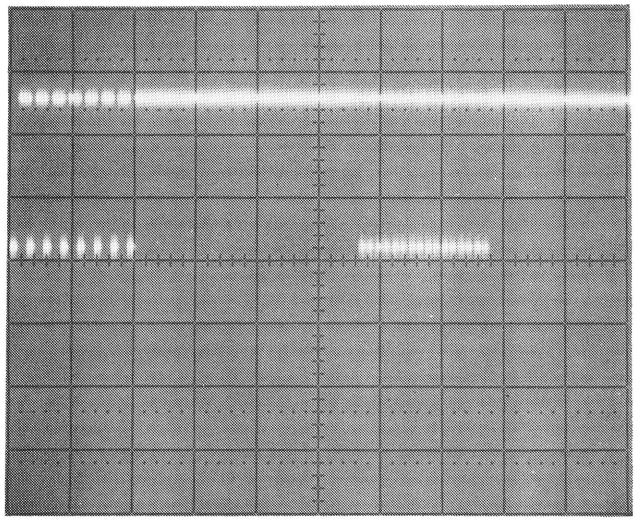

U102 - 33, U103 - 4 and 5 (DTR)
U102 - 37, U203 - 3 (DSR)

Horiz - 2 msec/div
Vert - 2 V/div

Period is 750 usec between bursts.
Low level pulse time is 20 usec.
High level pulse time is 40 usec.

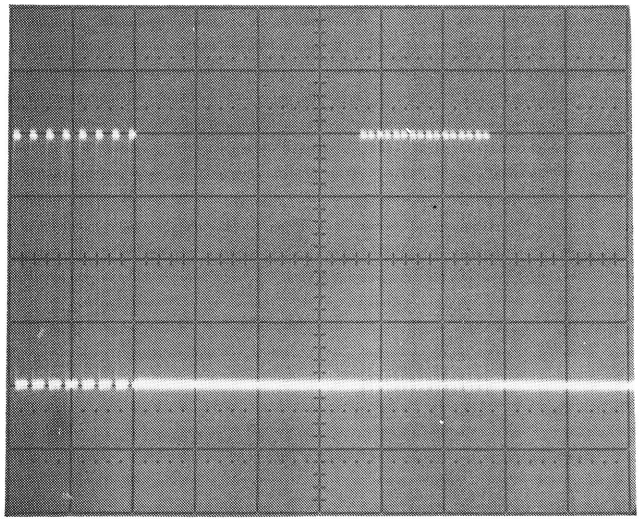

U103 - 6, U203 - 1

Horiz - .2 msec/div
Vert - 5 V/div

Times are same as previous photo but waveform is inverted and at RS-232 levels.

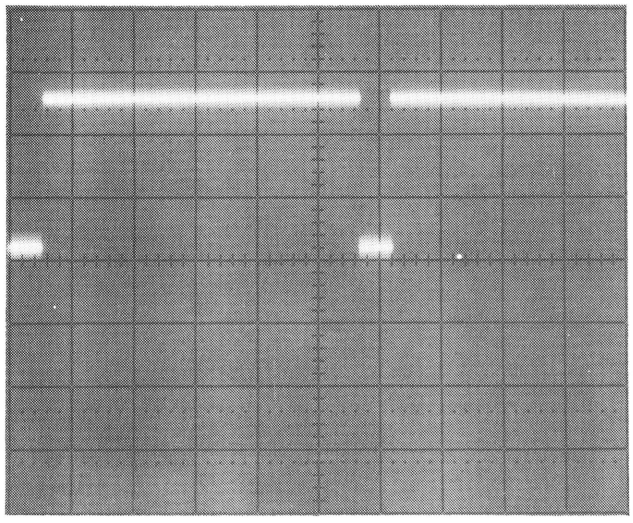

U102 - 11, U103 - 2 (DOUT)
U102 - 10, U203 - 11 (DIN)

Horiz - .2 msec/div
Vert - 2 V/div

Period between pulses is 1.15 msec.
Pulse width is 105 usec.

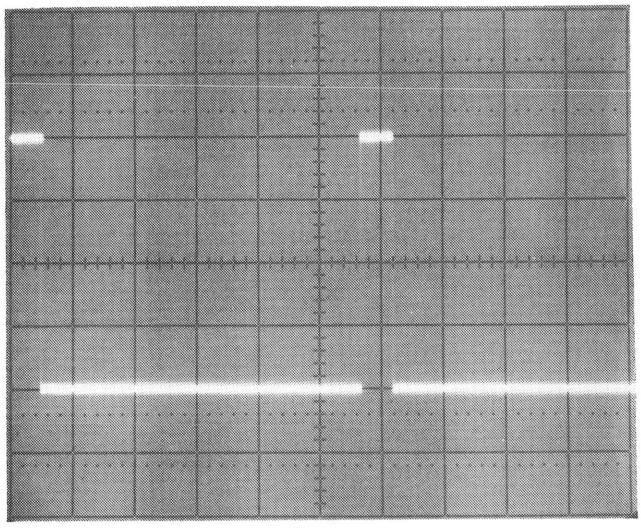

U103 - 3, U203 - 13

Horiz - .2 msec/div
Vert - 5 V/div

Times are same as previous photo but waveform is inverted and at RS-232 levels.

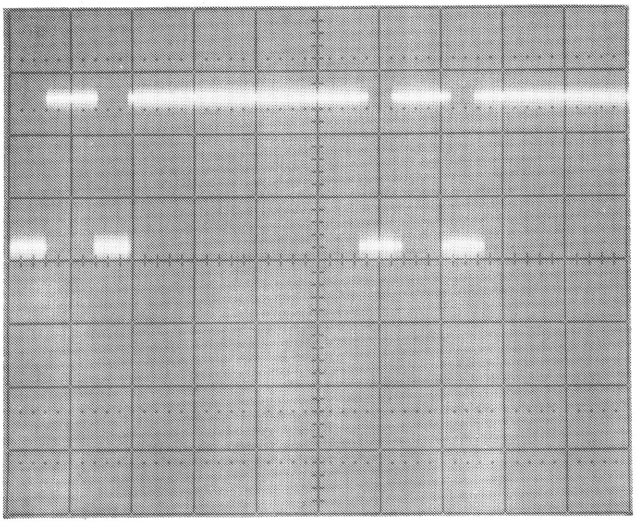

U102 - 32, U103 - 9 and 10 (RTS)
U102 - 36, U203 - 6 (CTS)

Horiz - .2 msec/div
Vert - 2 V/div

The pulses are low for 110 usec.
The high time between pulses is 160 usec.
The period from the start of the second pulse to the beginning of the next two pulses is 750 usec.

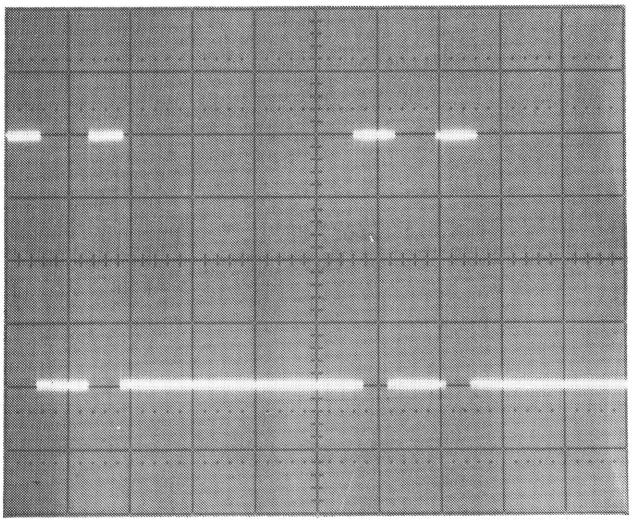

U103 - 8, U203 - 4

Horiz - .2 msec/div
Vert - 5 V/div

Times are same as previous photo but waveform is inverted and at RS-232 levels.

8-19. DIAGNOSTICS

Besides the power-on self check, there are a number of diagnostic selfchecks built into the 4945A that let you calibrate the instrument, verify the instrument operation and help isolate troubles.

There is a calibrate routine that runs specific diagnostic modes that calibrates the stored receiver constants. Calibration should be performed when the "RECEIVER NOT CALIBRATED" message is displayed.

The 4945A troubleshooting philosophy relies on these diagnostic modes to isolate problems.

First, check that all the power supplies are within specifications.

Look up the mode and the data segment that is failing in the following pages. In the case of multiple failures, always begin troubleshooting with the first test that fails.

At the begining of each mode, there is a description of what the mode is doing.

Troubleshooting hints and waveforms are given for the data segments in each mode to help you isolate a faulty component. Signature analysis tables are referred to when applicable. The SA tables are in their own section behind the diagnostics in Section 8.

Following is a list of the diagnostic modes.

Table 8-1. Diagnostic Modes

Mode Number	Title
1	Detector Digital and ADC Check (A5)
2	Detector Calibration Check (A5)
3	Basic Transmitter (A5, A15)
4	Wideband Autorange Amplifier Check (A4, A15, A17)
5	Narrowband Autorange Amplifier Check (A4, A11, A15, A17)
6	Frequency Counter and Crystal Check (A8, A14, A17)
7	Transmitter Single Tone Check (A8, A14, A15)
8	Transmitter Multi-Tone Check (A8, A14)
9	Transmitter Filter Sweep (A15, A17)
10	Transmitter Alternate Channel Check (A15, A17)
11	Wideband Filter Calibration (A2)
12	A2 Filter Sweeps (A2)
13	A2 Filter Sweeps Continued (A2)
14	A1 and A18 Check (A17, Receiver Level with termination, 2 wire return loss
15	IMD Hardware Check (A3)
16	IMD Filter Calibration (A3)
17	Jitter Digital and PLL Check (A6)
18	Jitter Calibration (A6)
19	Envelope Delay Hardware Check (A7)
20	Envelope Delay Calibration (A7)
21	Transient Measurements Check (A9)
22	FSK Demodulation Check (A3)

8-20. Running The Diagnostics

To access the diagnostic modes, press SETUP and then press the CALIBRATE/SELF-CHECK softkey.

You now have a choice to run all the modes, a specific mode or path within a mode. You can also specify the condition on which the test stops.

To run all the tests:

Select (FULL) SELF-CHECK and press START/STOP.

To run a particular mode:

Select (MODE) SELF-CHECK, press MODE and enter the mode number from the keyboard. Press ENTER to complete the entry. Press START/STOP to start the mode test.

To run a particular path within a mode:

First select the mode as described above, then select (SEGMENT) SELF-CHECK. Press SEGMENT and enter a data segment number associated with that path from the keyboard. Press ENTER to complete the entry. Press START/STOP to start the path test.

NOTE: IF AN UNUSED DATA SEGMENT NUMBER IS ENTERED, THE DATA SEGMENT DEFAULTS TO NUMBER 1.

STOP-ON Conditions

Following is a summary of the Stop-On conditions you can select.

CHECK END - Stops at the end of the selected test (i.e., at the end of the selected mode or at the end of all modes when FULL is selected).

FAIL-MODE - Stops at the end of the mode in which a failure has occurred. This mode runs non-stop if no error occurs.

FAIL-END - Stops after running all the modes when a failure occurs

NON-STOP - Run the selected tests continually.

When the test stops because of one of these conditions, press START/STOP to start the test over again. Press START/STOP to manually stop the test.

Calibrate

Use this feature when the "RECEIVER NOT CALIBRATED" message is displayed.

When CALIBRATE is selected, diagnostic modes 2, 11, 16, 18 and 20 are run. These modes calculate and update the receiver calibration constants.

8-21. MODE 1:Detector Digital And ADC Check (A5)

This mode checks the digital circuits and the analog to digital converter on the A 5 Detector board.

The first six segments verify the digital circuits around the analog to digital converter and measure the time period of the A5 calibration signal.

The last five tests check the accuracy of the analog to digital converter and the functions of the detector multiplexer switch.

Following is a summary of the Mode 1 tests.

Data Segment	Test	Results Displayed	Path
1	Board Presence Test	0 +/- 0	1
2	Walking Ones Test	0 +/- 0	2
3	not used		
4	Comparator Tests	0 +/- 0	3
5	not used		
6	Tracking ADC Tests	0 +/- 0	4
7	Peak Detector Tests	0 +/- 0	5
8	Cal Signal Digital Tests	0 +/- 0	6
9	Count Up Period Test	4096 +/- 20	6
10	Count Down Period Test	4096 +/- 20	6
11	not used		
12	Tracking ADC Accuracy	190 +- 10 mV	7
13	not used		
14	Voltage Reference Test	909 +/- 11 mV	8
15	not used		
16	Receiver +5.0 V CLN	5000 +/- 250	9

Following is a description of each test path.

Path 1 Board Presence Test (Data Segment 1)

This test checks pin 12 of U405 (bit RD 4) on the A5 detector board for a low logic level. If A5 is not installed, this data line is high and the test fails. If the read logic and/or the latch is bad, the test also fails. The UP/DOWN control bit on the programmable counters is also tested.

Errors	Probable Cause
XXXXX1X	A5 is not installed. Pin 12 of A5U405 is not a low logic level. Verify that the A5 board is properly installed in its connector. Check the output latch U405, and the select circuits, U205, U706 and U606. Check TP4 for chip select pulses (high) each time A5 is addressed. Pulse from ground to +5 volts once every 28 milliseconds. U405 pin 13 should be low (logic zero). U405 pin 12 should pulse low each time A5 is addressed. Pulse from +5 volts to ground once every 28 milliseconds. U405 and U505 pin 11 should have high chip select pulses when A5 is addressed. Pulse from ground to +5 volts once every 28 milliseconds. Try the A10 SA Program Loop in the Signature Analysis section.
XXXXXX1	Read/write test on up/down bit. The up/down control on the programmable counters is set through multiplexer U204, and read through the latch U405. Check the select circuits U205, U706, U606. Check for a stuck bit on the chips connected to the UP/DOWN line, U105, U306, U406, U506. The UP/DOWN signal on U204 pin 7 should be high. Try the A10 SA Program loop in the Signature Analysis section.

Path 2 Walking Ones Test (Data Segment 2)

This is a read/write test of the programmable latches U306U406, and U506 on A5. A pattern of 12 bits with one bit set is written and read from the programmable latches starting with the least significant bit set, and working up to the twelfth bit.

Errors	Probable Cause
XXXX1X	The programmable counter U306 is written to and the latch U405 is read from and one of the bits is bad. Check the select circuits; U706, U606, and U205. Also check for a stuck bit on the DAC U305
XXXXX1	The programmable counters U406 and U506 are written to and U405 is read from and one of the bits is bad. Check the select circuits; U706, U606, and U205. Also check for a stuck bit on the DAC U305. Try the A10 SA Program loop in the Signature Analysis section.

Path 3 Comparator Tests (Data Segment 4)

This test selects voltages through the detector multiplexer U604 and the DAC U304, and applies them to the analog comparator U106. The comparator output is read by the processor.

Errors	Probable Cause
XXX1XXX	This test checks the comparator, detector multiplexer, and the DAC. The DAC is set to 2.5 volts, and the detector multiplexer selects zero volts. Check the following items: The output of the comparator U106 should be +15 volts Nand gate U205 TP2 = 0 Latch U105 = 0 The DAC output buffer U206 should be about 2.32 volts The detector multiplexer inputs: pin 15=1, pin 16=1, pin 1=1, pin 10= +5 volts. The output on pin 8 (TP3) should be +5 volts.
XXXX1XX	This test checks the comparator, detector multiplexer, and the DAC. The DAC is set to 2.5 volts, and the detector multiplexer selects +5 volts. Check the following items: The output of the comparator U106 should be =0 volts Nand gate U205 TP2 = 1 (high) Latch U105 pin 2 = 0 The DAC output buffer U206 should be about 2.32 volts The detector multiplexer (U604) inputs: pin 15=1, pin 16=1, pin 1=0, pin 10= +5 volts. The output on pin 8 (TP3) should be +5 volts.
XXX1XXX	This test checks the comparator, detector multiplexer, and the DAC. The DAC set for 7.5 volts, and the detector multiplexer selects +5 volts. Check the following items: The output of the comparator U106 should be +15 volts Nand gate U205 TP2 = 0 Latch U105 pin 2 = 0 The DAC output buffer U206 should be about 7.32 volts The detector multiplexer inputs: pin 15=1, pin 16=1, pin 1=0, pin 10= +5 volts. The output on pin 8 (TP3) should be +5 volts.

XXXXXX1 This test checks the digital circuits. The processor sets latch U705 to 0FBH, and U204 selects latch mode. The output of U204 goes to the programmable counters U306, U406, U506 on the up/down and enable count lines. The 3 most significant bits on latch U405 are read: the comparator output, U405 pin 18 = 0, up/down U405 pin 17 = 1, enable count U405 pin 14 = 1.

Check the waveform at TP3 to verify correct operation of multiplexer U604. Pulse from +5 volts to ground once every 28 milliseconds.

Check the waveform at U305 pin 10 to verify correct operation of the DAC. Pulse from +7.32 volts to +2.32 volts once every 28 milliseconds.

Check the waveform at U106 pin 7 to verify correct operation of the comparator. Pulse from +15 volts to ground once every 28 milliseconds.

Check the waveform at TP2. Pulse from ground to +5 volts once every 28 milliseconds.

If the data observed in this path is of the form XXXXXXX1, then the problem is in the digital circuits. Try the A10 SA Program loop in the Signature Analysis section.

Path 4 Tracking ADC Tests (Data Segment 6)

Errors	Probable Cause
XXXXX1X	This test checks the ability of the tracking ADC to track upward in voltage. First, the detector multiplexer U604 selects + 5 volts andapplies it to comparator U106. The DAC, U305, is initialized to -0.17 volts by programming the counter U306, U406, U506 to zero. Then U204 selects the tracking ADC mode which drives the enable count line to the counters (U204 pin 9) low and the up/down count line goes according to the comparator out put. The test checks whether the tracking ADC can track upward pm the +5 volt input signal. A timeout condition is used to detect a test failure.
XXXXXX1	This test checks the ability of the tracking ADC to track downward in voltage. First, the detector multiplexer U604 selects 0 volts and applies it to the comparator U106. The DAC U305 is initialized to -9.83 volts by programming the counter U306, U406, U506 to ones. Then U204 selects the tracking ADC mode which drives the enable count line to the counters (U204 pin 9) low and the up/down count line according to the comparator output. The test checks whether the tracking ADC can track downward on the 0 volt input signal. A timeout condition is used to detect a test failure.

If this data segment fails, check the following:

Check the waveform at TP3 to verify the detector multiplexer, U604. Pulse from ground to +5 volts once every 28 milliseconds.

Check the waveform at U305 pin 10 to verify the D to A converter, U206 and U305 (See Figure Mode 1 - 1).

Check the waveform at U106 pin 7 to verify comparator operation (See Figure Mode 1 - 2).

Also check the waveform at TP2 (See Figure Mode 1 - 3).

Path 5 Peak Detector Tests (Data Segment 7)

These tests check the peak detect mode of the A/D converter circuit on A5. The peak detect mode is checked for the peak following condition (count up), and the peak hold (no count) condition.

Errors	Probable Cause
XXXX1XX	This test checks the peak following condition. First, the DAC, U305, is set for zero (-0.17 volts) and U204 is set for peak detect mode (U204 pin 14 = 1, pin 2 = 0). The detector multiplexer (U604) selects +5 volts (U604 pin 15 = 1, pin 16 = 1, pin 1 = 0, and pin 8 = +5 volts). Comparator U106 should make the programmable counter count upward since the DAC output is less than the +5 volt input to the comparator. The circuit conditions during this period should be: U106 pin 3 = +5 volts, pin 2 = ramping upward to +5 volts, pin 7 = 0 volts; U205 pin 3 = 10; U105 pin 2 = 10, pin 3 = 0; U204 pin 9 = 0, pin 7 = 1. This circuit condition terminates within the test when the DAC output equals the +5 volts at the comparator. Then the next test condition is valid.
XXXXX1X	This test condition is valid when the two comparator voltages become equal at the end of the previous test condition. The peak value of the input signal has been reached at this time, and a failure here indicates that the peak detect count up never stops. The circuit conditions for this should be: U106 pin 3 = +5 volts, pin 2 = +5 volts, pin 7 = +15 volts; U205 pin 3 = 0; U105 pin 2 = 0, pin 3 = 1; U204 pin 9 = 1, pin 7 = 1.
XXXXXX1	When the previous tests are completed, the DAC has all ones for input and is programmed to 9.83 volts leaving the detector multiplexer selecting +5 volts. This checks the peak holding function. The circuit conditions are the same as for the previous test.

Check the waveform at TP3 to verify correct operation of the detector multiplexer, U604 pin 8 (+ 5 volt dc level).

Check the waveform at U305 pin 10 to verify the DAC U206 and U305 (See Figure Mode 1 - 4).

Check the waveform at U106 pin 7 and TP2 to verify correct operation of the comparator (See figures below).

U106 pin 7 waveform

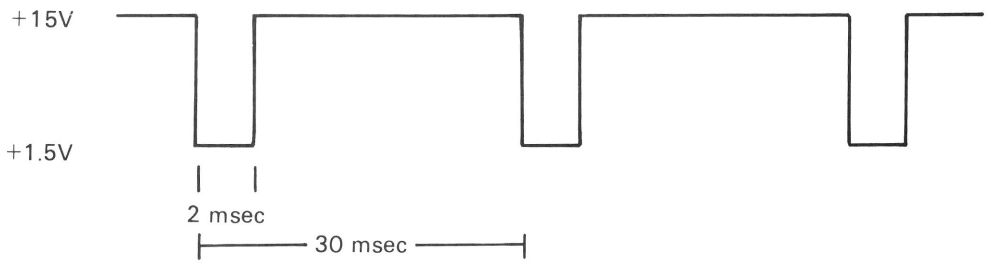

TP2 waveform

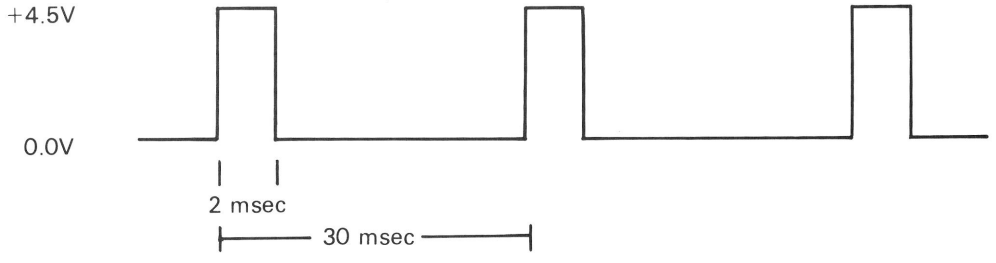

Path 6 Triangle Wave Generator Mode Tests (Data Segments 8, 9 and 10)

The triangle wave mode of the converter is checked. The programmable counter counts up for 4096 microseconds and then down for 4095 microseconds. The software looks for the beginning of each counting phase. Time limits are set for each counting phase.

The count up and count down periods should be near 4096 microseconds.

Errors	Description
XX1111	Programmable counter never starts counting down
XXX111	Programmable counter never starts counting up
XXXX11	Count up period s too long
XXXXX1	Count down period is too long.

Check the triangle waveform at U305 pin 10 to verify correct operation of the DAC, U206 and U305. Look for a symmetrical triangle waveform, 10 volts peak-to-peak resting on ground, with an 8.2 millisecond period.

Check the waveform at TP2 (shown below) to verify the comparator operation.

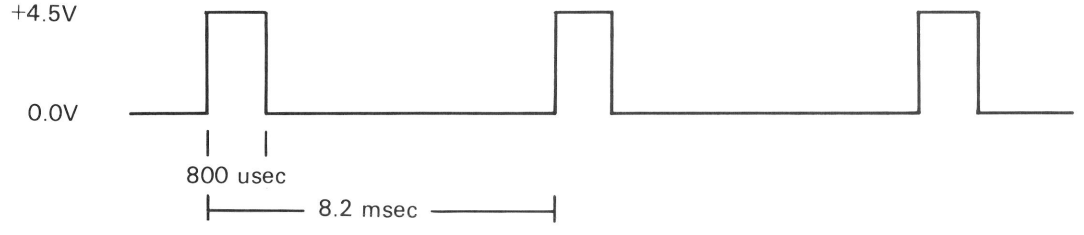

If both these signals are correct, try the Receiver Processor (A10) signature analysis loop and look for faulty components (U306, U406, U506 , etc.)

Path 7 Tracking ADC Accuracy (Data Segment 12)

The detector multiplexer selects ground and the dc amp gain is set to +1. The voltage reference should be 190 +-10 mV.

Failures here could indicate a bad multiplexer, DAC or comparator.

Check U604 pin 9 and pin 3 for ground.

Check U206 pin 3 for the correct offset voltage, +5 to +20 mV. Note: By reading this offset with the ADC, the DAC output voltage has been adjusted to compensate for it; the entire 190 mV offset voltage is not present here. Only that part of the offset due to the comparator is seen here.

Path 8 Voltage Reference Test (Data Segment 14)

The detector multiplexer selects attenuated +10 volts and the dc amp gain is set to +1. The voltage reference should be 909 +-11 mV.

The displayed voltage should be 909 mV.

Check the voltage reference output (U305 pin 4) for +10.0 volts +- 100 mV.

Check the precision voltage reference output (U305 pin 2) for +10.0 volts +- 10 mV.

Check U604 pin 11 and TP3 for 0.909 volts +-1%.

Path 9 Receiver +5 Volts (Data Segment 16)

The detector multiplexer selects +5 volts and the dc amp gain is set to +1. The reference voltage should be 5000 mV +- 250 mV.

Check U604 pin 10 and TP3 for +5.0 volts.

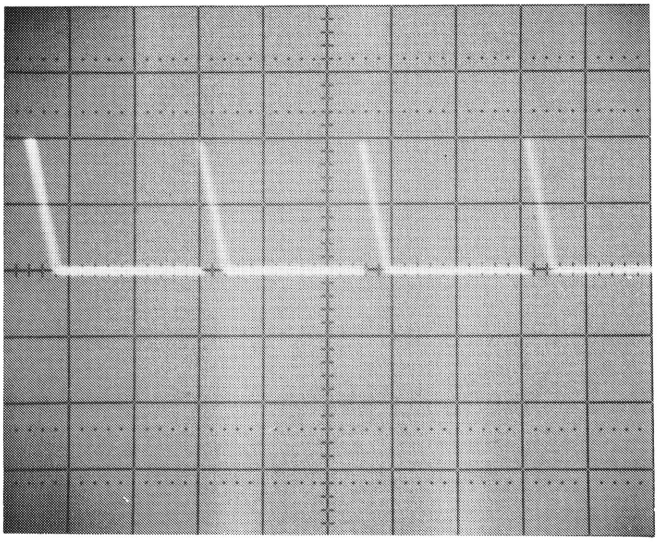

Vert: 10 V/div
Horiz: 10 msec/div

Figure Mode 1-1

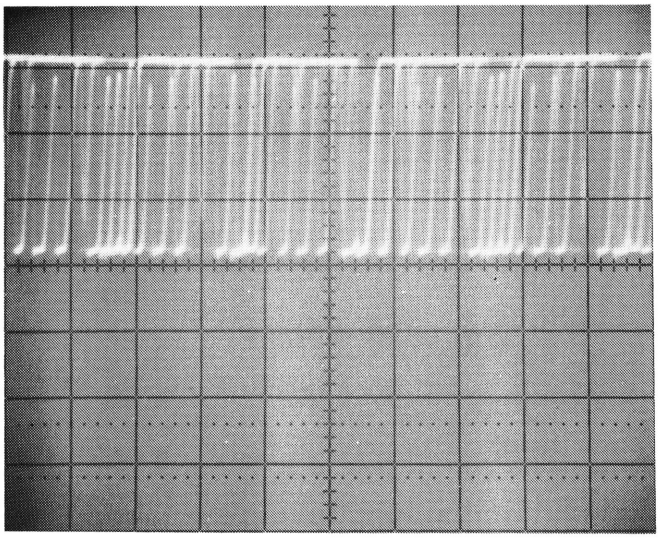

Vert: 5 V/div
Horiz: 2 μsec/div

Figure Mode 1-2

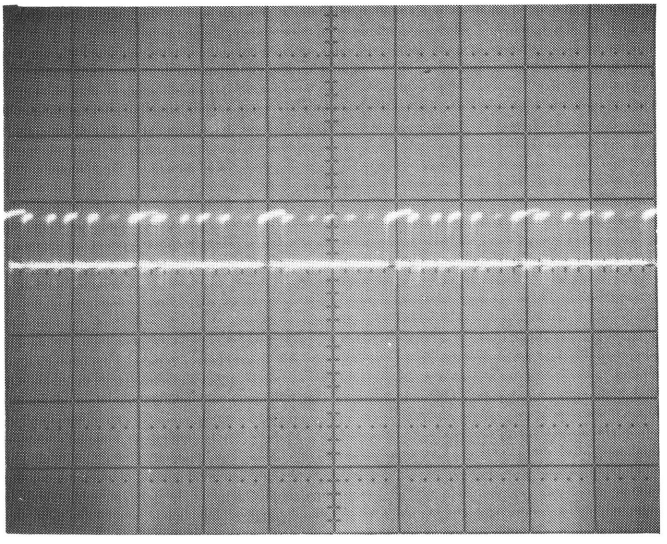

Vert: 5 V/div
Horiz: 2 μsec/div

Figure Mode 1-3

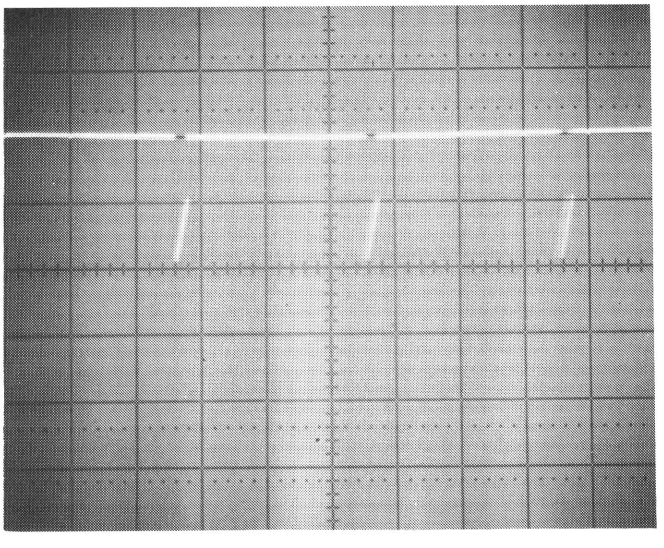

Vert: 5 V/div
Horiz: 10 msec/div

Figure Mode 1-4

Figure 8-6. Mode 1 Waveforms

8-22. MODE 2: Detector Calibration Check (A5)

This mode calibrates the A5 detectors and then checks the calibration constants against known limits. A check of the A5 analog circuits is also done.

Each detector's input/output characteristic is a linear function with slope and intercept values. The dc offset refers to the intercept and the gain constant refers to the slope; each is expressed times 1000. The dc offset is in millivolts and the gain constant is in dc volts output divided by the ac volts input (displayed in the appropriate measure of ac; e.g., average, rms or peak).

The comparator dc offset is an intentional dc offset in the A to D converter which measures all detector outputs. The offset lets the ADC measure detector offsets that are less than 0 volts. Thus, the input voltage range of the ADC is 10 volts wide but is shifted by the negative dc offset voltage of the comparator.

Note: Data segment 1 must be run before any other path since the data acquired in data segment 1 is used by the other data segments.

Following is a Summary of the Mode 2 tests.

Data Segment	Test	Results Displayed	Path
1	190 mV dc offset ADC comparator	188 +-18 mV	1
2	not used		
3	0 dc offset rms detector	0 +-10 mV	2
4	4 1000 gain constant rms detector (X1000)	1000 +-20	3
5	not used		
6	0 dc offset FWA wideband detector	0 +-170 mV	4
7	2000 gain constant FWA wideband det.(X1000)	2000 +/-20	5
8	0 dc offset FW rectified path	0 +-40 mV	6
9	909 gain constant FW rectified path	909 +-5	7
10	not used		
11	0 dc offset FWA narrowband detector	0 +-70 mV	8
12	2000 gain constant FWA narrowband det(X1000)	2000 +/-20	9
13	0 dc offset FW rectified path	0 +-15 mV	10
14	909 gain constant FW rectified path (X1000)	909 +-5	11
15	not used		
16	not used		

Following is a description of each Mode 2 path.

Path 1 (Data Segment 1)

In this segment, ground (U604 pin 8) is selected and measured by the successive approximation A to D converter. It is essentially the same as Mode 1, Data Segment 12.

Check U604 pin 9 and TP3 for ground.

Check U206 pin 3 for the correct offset voltage, +5 to +20 mV.

Path 2 (Data Segment 3)

U701 pin 9 is selected at the A5 input. This pin should be ground. It is routed to the RMS detector U601, then to U604 pin 6, and finally read by the A to D converter.

Check the following points for ground:

U701 pin 9, U601 pin 6, U604 pin 6, TP3

Path 3 (Data Segment 4)

A triangle waveform is generated using the up/down counters (U306, U406 and U506) and the DAC (U305 and U206). This waveform appears at TP1 (CAL SIG). The signal is selected on U701 pin 11 and routed to the rms detector, U601. The detector output is selected by detector multiplexer (U604 pin 6). After this output has settled, the A5 board switches to the A to D mode and the voltage is read. This voltage is being read by the same circuits that generated the triangle waveform. The detector settling time constant is such that the voltage remains long enough after the triangle waveform is removed to be measured.

If this data segment fails, check TP1 to verify that the triangle waveform is correct. Look for a symmetrical triangle waveform, 10 volts peak-to-peak, symmetrical about ground, with a period of 8.2 milliseconds.

It is continually generated and then removed as the data segment is run, causing the scope display to blink once every four seconds.

Check the waveform at U601 pin 1. It should be the same as the waveform at TP1.

Check the waveform at U601 pin 6 to verify correct operation of the rms detector. Look for + 2.9 volts dc. This should also be at TP3.

Path 4 (Data Segment 6)

U701 pin 9 is selected at the input of A5. This pin should be ground. It is routed to the full wave average detector (U400, U401, U402, U403 and U201). The detector output is selected by the detector multiplexer (U604) and then read by the A to D convertor.

Check the following points for ground:

U701 pin 9, U403 pin 6, U201 pin 6, U604 pin 5, TP3

Path 5 (Data Segment 7)

A triangle waveform is generated using the up/down counters (U306, U406 and U506) and the DAC (U305 and U206). This waveform appears at TP1 (CAL SIG). The waveform is selected by the input multiplexer (U701 pin 11) and routed to the full wave average wideband detector (U400, U401, U402, U403 and U201). The detector output (U201 pin 6) is selected by the detector multiplexer. After the output has settled, A5 is switched to the A to D mode and the voltage is read. The voltage is read by the same circuit that generated the triangle waveform. The detector settling time is such that the voltage remains long enough after the triangle waveform is removed to be measured.

If this data segment fails, check TP1 to verify that the triangle waveform is correct. Look for a symmetrical triangle waveform, 10 volts peak-to-peak, symmetrical about ground, with a period of 8.2 milliseconds.

It is continually generated and then removed as the data segment is run, causing the scope display to blink once every four seconds.

Check the waveform at U400 pin 6. It should be the same as the waveform at TP1.

Check the waveform at U403 pin 6. Look for a symmetrical triangle waveform, 5 volts peak-to-peak, resting on ground, with a peroid of 4.1 milliseconds.

Check U201 pin 6 to verify correct operation of the FWA detector.
Look for +5 volts dc. This should also be at TP3.

Path 6 (Data Segment 8)

U701 pin 9 is selected at the input to A5. This pin should be ground. This is routed to the FW rectified wideband detector (U400, U401, U402 and U403). The detector output is routed through switch U602, selected by the detector multiplexer U604 and read by the A to D converter.

Check the following points for ground:

U701 pin 9, U403 pin 6, U602 pins 1 and 6, U604 pin 7, TP3

Path 7 (Data Segment 9)

A triangle waveform is generated using the up/down counters (U306, U406 and U506) and the DAC (U305 and U206). This waveform appears at TP1 (CAL SIG). The waveform is selected by the input multiplexer (U701 pin 11) and routed to the FW rectified wideband detector (U400, U401, U402 and U403). The detector output (U403 pin 6) is routed through switch U602 and selected by the detector multiplexer U604. After the output has settled, A5 is switched to the A to D mode and the voltage is read. The voltage is read by the same circuit that generated the triangle waveform. The detector settling time is such that the voltage remains long enough after the triangle waveform is removed to be measured.

If this data segment fails, check U701 pin 8 to verify that the square wave is correct. Look for a 0 to +10 volt square wave.

Check the waveform at U400 pin 6. It should be the same as U701 pin 8.

Check the waveform at U403 pin 6. It should be the same as U701 pin 8.

Check the waveform at U602 pin 6 to verify correct operation of the FW rectified detector. It should be the same as U701 pin 8. This waveform should also be at TP3.

Path 8 (Data Segment 11)

U702 pin 9 is selected at the input of A5. This pin should be ground. This is routed to the FWA narrowband detector (U300, U301, U302, U303 and U200). The detector output is selected by the detector multiplexer U604 and read by the A to D converter.

Check the following points for ground:

U702 pin 9 U300 pin 6, U303 pin 6, U200 pin 6,

U604 pin 4, TP3

Path 9 (Data Segment 12)

A triangle waveform is generated using the up/down counters (U306, U406 and U506) and the DAC (U305 and U206). This waveform appears at TP1 (CAL SIG). The waveform is selected by the input multiplexer (U701 pin 11) and routed to the FWA narrowband detector (U300, U301, U302, U303 and U200). The detector output (U200 pin 6) is selected by the detector multiplexer U604. After the output has settled, A5 is switched to the A to D mode and the voltage is read. The voltage is read by the same circuit that generated the triangle waveform. The detector settling time is such that the voltage remains long enough after the triangle waveform is removed to be measured.

If this data segment fails, check TP1 to verify that the triangle waveform is correct. Look for a symmetrical triangle waveform, 10 volts peak-to-peak, symmetrical about ground, with a period of 8.2 milliseconds.

It is continually generated and then removed as the data segment is run, causing the scope display to blink once every 1.67 seconds.

Check the waveform at U300 pin 6 (should be the same as TP1).

Check the waveform at U303 pin 6. Look for a symmetrical triangle waveform, 5 volts peak-to-peak, symmetrical about ground, with a period of 4.1 milliseconds.

Check U200 pin 6 to verify correct operation of the FWA narrowband detector. The voltage should be +5 volts dc. This voltage should also be at TP3.

Path 10 (Data Segment 13)

U702 pin 9 is selected at the input of A5. This pin should be ground. This is routed to the FW rectified narrowband detector (U300, U301, U302 and U303. The detector output is routed through switch U602, selected by the detector multiplexer U604 and read by the A to D converter.

Check the following points for ground:

U702 pin 9 U300 pin 6, U303 pin 6, U602 pins 1 and 6, TP3

Path 11 (Data Segment 14)

A triangle waveform is generated using the up/down counters (U306, U406 and U506) and the DAC (U305 and U206). This waveform appears at TP1 (CAL SIG). The waveform is selected by the input multiplexer (U702 pin 11) and routed to the FW rectified narrowband detector (U300, U301, U302 and U303). The detector output (U303 pin 6) is routed through switch U602 and selected by the detector multiplexer U604. After the output has settled, A5 is switched to the A to D mode and the voltage is read. The voltage is read by the same circuit that generated the triangle waveform. The detector settling time is such that the voltage remains long enough after the triangle waveform is removed to be measured.

If this data segment fails, check U702 pin 8 to verify that the square wave is correct. Look for a 0 to +10 volt square wave.

Check for the same waveform at:

U300 pin 6 U303 pin 6

Check the waveform at U602 pin 6 to verify correct operation of the FW rectified narrowband detector. This should be the same waveform as U702 pin 8. This waveform should also be at TP3.

8-23. MODE 3: Basic Transmitter Check (A5, A15)

This mode connects the self test signal (ST16) from A15 directly to the A5 input multiplexer. A 1024 Hz, .775 Vrms sine wave is transmitted and measured with the FWA wideband and RMS detectors (Paths 1 and 2). The same signal is then transmitted with an additional 10 dB of loss introduced by the fine attenuator on A15 and again measured by the two detectors (Paths 3 and 4). In the last segment (Path 5), the signal is set to .775 Vrms and a rough frequency check is made by setting the A5 comparator threshold to .33 V and measuring the time between threshold crossings by the FW rectified signal.

Following is a summary of the Mode 3 tests.

Data Segment	Test	Results Displayed	Path
1	FWA voltage in mV	698 +/- 20	1
2	RMS voltage in mV	775 +/- 20	2
3	not used		
4	FWAvoltage -10 dB	221 +/- 6	3
5	RMS voltage -10 dB	234 +/- 6	4
6	not used		
7	Time in microseconds	1024 +/- 30	5

8 thru 16 not used

General Troubleshooting

If paths 1 through 4 all read 0 or the same number, there is no signal coming from the transmitter or the A5 multiplexer is selecting the wrong signal.

If paths 1 and 2 pass but 3 and 4 fail, or vice versa, the A15 fine attenuator is malfunctioning.

If paths 1 and 3 pass but 2 and 4 fail, or vice versa, there may be distortion in the transmitter signal or the transmitter may be outputting something other than a sine wave.

If only path 5 fails, the transmitter is outputting the wrong frequency or the A5 is failing.

Following is a description of each Mode 3 path.

Path 1 (Data Segment 1)

A transmitter signal of 1024 Hz, .775 V rms from A15 is input to the A5 multi plexer. The voltage is measured at the FWA wideband detector output.

Verify that the transmitter signal is getting to A5 by checking A5 U701 pin 6 for a 1024 Hz sine wave, 2.2 volts peak-to-peak (no dc offset).

If this signal is not correct, check the following items on A15:

Check TP1 for a 6.2 volt reference from A14.

Check the waveform at TP3 (See Figures Mode 3 - 1 and Mode 3 - 2). It should be a stair-step approximation of the sine wave. If it is not correct, and the dc reference on TP1 is good, then suspect an error in the digital inputs to U200.

Check U101 pin 6 for the same waveform.

Check U204 pin 6 for the same waveform with the stair-steps removed to verify the low pass filter operation (U204). See Figures Mode 3 - 3 and Mode 3 - 4.

Check TP2 for a 1024 Hz sine wave at 12.8 volts peak-to-peak.

Check U606 pin 6 for a 1024 Hz sine wave at 2.2 volts peak-to-peak (same waveform as A5 U701 pin 6) to verify the fine attenuator operation (U506, U606).

If all the above items on A15 are correct, check the following items on A5:

Check U701 pin 8 for a 1024 Hz sine wave at 2.2 volts peak-to-peak to verify the multiplexer operation (U701).

Check U400 pin 6 for the same waveform.

Check the waveform at U403 pin 6 to verify the full wave rectifier. Look for a 2048 Hz, full-wave rectified signal, resting on ground, 1.1 volts peak.

Check U201 pin 6 for 1.42 volts dc to verify the averaging filter U201.

Check TP3 for the same dc level, 1.42 volts dc.

Path 2 (Data Segment 2)

A transmitter signal of 1024 Hz, .775 Vrms from A15 is input to the A5 multiplexer. The voltage is measured at the RMS detector output.

Verify that the transmitter signal is getting to A5 by checking A5 U701 pin 6 for a 1024 Hz sine wave, 2.2 volts peak-to-peak (no dc offset).

If this signal is not correct, check the following items on A15:

Check TP1 for a 6.2 volt reference from A14.

Check the waveform at TP3. See Figures Mode 3 - 1 and Mode 3 - 2. It should be a stair-step approximation of the sine wave. If it is not, and the dc reference on TP1 is good, then suspect an error in the digital inputs to U200.

Check U101 pin 6 for the same waveform.

Check U203 pin 6 for the same waveform with the stair-steps removed to verify the low pass filter operation (U203). See Figures Mode 3 - 3 and Mode 3 - 4.

Check TP2 for a 1024 Hz sine wave at 12.8 volts peak-to-peak.

Check U606 pin 6 for a 1024 Hz sine wave at 2.2 volts peak-to-peak (same waveform as A5 U701 pin 6) to verify the fine attenuator operation (U506, U606).

If all the above items on A15 are correct, check the following items on A5:

Check U701 pin 8 for a 1024 Hz sine wave at 2.2 volts peak-to-peak to verify the multiplexer operation (U701).

Check U400 pin 6 for the same waveform.

Check U601 pin 6 for .77 volts dc to verify the rms detector (U601).

Check TP3 for the same dc level, .77 volts dc.

Path 3 (Data Segment 4)

A transmitter signal of 1024 Hz, .245 Vrms from A15 is input to the A5 multiplexer and measured at the output of the FWA wideband detector.

Verify that the transmitter signal is getting to A5 by checking A5 U701 pin 6 for a 1024 Hz sine wave, 0.71 volts peak-to-peak (no dc offset).

If this signal is not correct, check the following items on A15:

Check TP1 for a 6.2 volt reference from A14.

Check the waveform at TP3. See Figures Mode 3 - 1 and Mode 3 - 2. It should be a stair-step approximation of the sine wave. If it is not, and the dc reference on TP1 is good, then suspect an error in the digital inputs to U200.

Check U101 pin 6 for the same waveform. Check U203 pin 6 for the same waveform with the stair-steps removed to verify the low pass filter operation (U203). See Figures Mode 3 - 3 and Mode 3 - 4.

Check TP2 for a 1024 Hz sine wave at 12.8 volts peak-to-peak.
Check U606 pin 6 for a 1024 Hz sine wave at 0.71 volts peak-to-peak (same waveform as A5 U701 pin 6) to verify the fine attenuator operation (U506, U606).

If all the above items on A15 are correct, check the following items on A5:

Check U701 pin 8 for a 1024 Hz sine wave at 0.71 volts peak-to-peak to verify the multiplexer operation (U701).

Check U400 pin 6 for the same waveform.

Check the waveform at U403 pin 6 to verify the full wave rectifier. Look for a 2048 Hz, full-wave rectified signal, resting on ground, 0.4 volts peak.

Check U201 pin 6 for 0.46 volts dc to verify the averaging filter U201.

Check TP3 for the same dc level, 0.46 volts dc.

Path 4 (Data Segment 5)

A transmitter signal of 1024 Hz, .245 Vrms from A15 is input to the A5 multiplexer and measured at the output of the RMS detector.

Verify that the transmitter signal is getting to A5 by checking A5 U701 pin 6 for a 1024 Hz sine wave, 0.71 volts peak-to-peak (no dc offset).

If this signal is not correct, check the following items on A15:

Check TP1 for a 6.2 volt reference from A14.

Check the waveform at TP3. See Figures Mode 3 - 1 and Mode 3 - 2. It should be a stair-step approximation of the sine wave. If it is not, and the dc reference on TP1 is good, then suspect an error in the digital inputs to U200.

Check U101 pin 6 for the same waveform.

Check U203 pin 6 for the same waveform with the stair-steps removed to verify the low pass filter operation (U203). See Figures Mode 3 - 3 and Mode 3 - 4.

Check TP2 for a 1024 Hz sine wave at 12.8 volts peak-to-peak.

Check U606 pin 6 for a 1024 Hz sine wave at 0.71 volts peak-to-peak (same waveform as A5 U701 pin 6) to verify the fine attenuator operation (U506, U606).

If all the above items on A15 are correct, check the following items on A5:

Check U701 pin 8 for a 1024 Hz sine wave at 0.71 volts peak-to-peak to verify the multiplexer operation (U701).

Check U400 pin 6 for the same waveform.

Check U601 pin 6 for 0.25 volts dc to verify the rms detector U601.

Check TP3 for the same dc level, 0.25 volts dc.

Path 5 (Data Segment 7)

A transmitter signal of 1024 Hz, .775 Vrms from A15 is input to the A5 multiplexer. The A5 comparator threshold is set to .33 V and the time between threshold crossings is measured.

Verify that the transmitter signal is getting to A5 by checking A5 U701 in 6 for a 1024 Hz sine wave, 2.2 volts peak-to-peak (no dc offset).

If this signal is not correct, check the following items on A15:

Check TP1 for a 6.2 volt reference from A14.

Check the waveform at TP3. See Figures Mode 3 - 1 and Mode 3 - 2. It should be a stair-step approximation of the sine wave. If it is not, and the dc reference on TP1 is good, then suspect an error in the digital inputs to U200.

Check U101 pin 6 for the same waveform.

Check U203 pin 6 for the same waveform with the stair-steps removed to verify the low pass filter operation (U203). See Figures Mode 3 - 3 and Mode 3 - 4.

Check TP2 for a 1024 Hz sine wave at 12.8 volts peak-to-peak.

Check U606 pin 6 for a 1024 Hz sine wave at 2.2 volts peak-to-peak (same waveform as A5 U701 pin 6) to verify the fine attenuator operation (U506, U606).

If all the above items on A15 are correct, check the following items on A5:

Check U701 pin 8 for a 1024 Hz sine wave at 2.2 volts peak-to-peak to verify the multiplexer operation (U701).

Check U400 pin 6 for the same waveform.

Check the waveform at U403 pin 6 to verify the full wave rectifier. Look for a 2048 Hz, full-wave rectified signal, resting on ground, 1.1 volts peak.

Check TP3 for the same waveform.

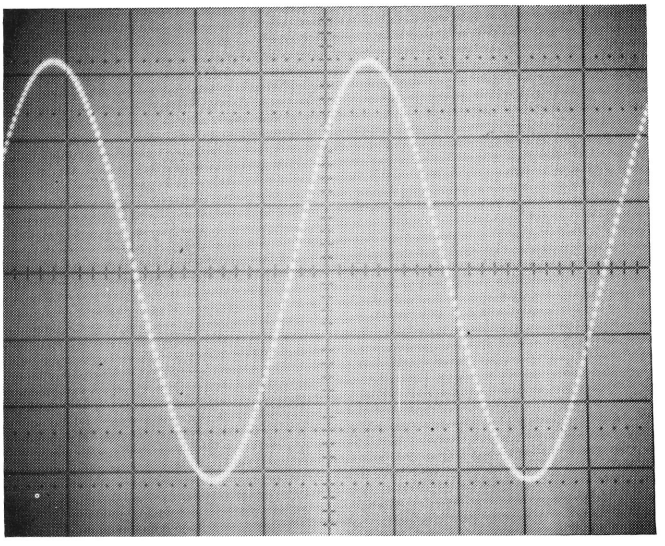

Vert: 1 V/div
Horiz: .2 msec/div

Figure Mode 3-1

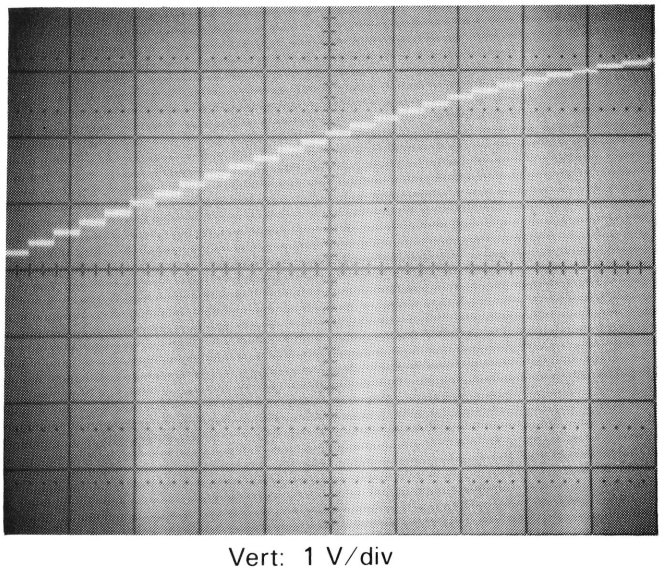

Vert: 1 V/div
Horiz: 20 μsec/div

Figure Mode 3-2

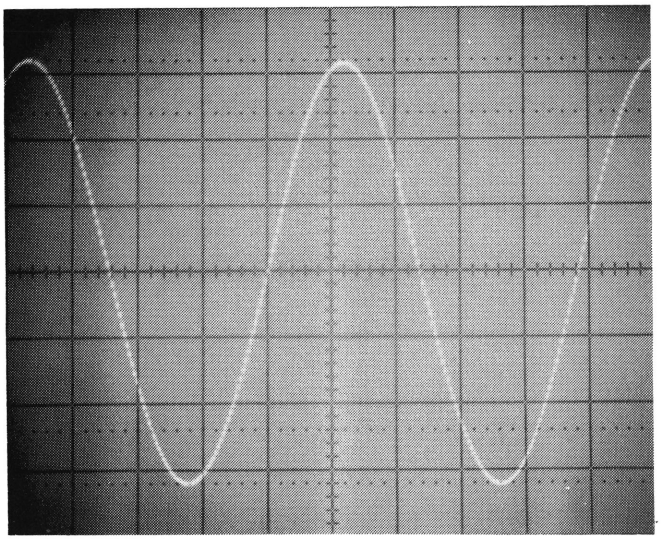

Vert: 2 V/div
Horiz: .2 msec/div

Figure Mode 3-3

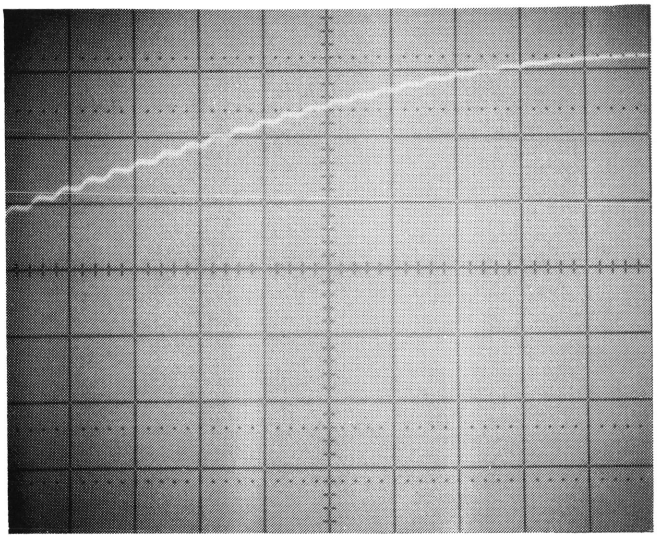

Vert: 2 V/div
Horiz; 20 μsec/div

Figure Mode 3-4

Figure 8-7. Mode 3 Waveforms

8-24. MODE 4: Wideband Autorange Amplifier Check (A4, A15, A17)

This mode checks the transmitter course attenuator on A17, the transmitter fine attenuator on A15 and the wideband autorange amplifier on A4.

The displayed numbers represent the rms voltage output of the wideband autorange channel under all gain conditions. The rms voltage can be verified with an external rms voltmeter at A4 TP5. A single failure can be located by observing the pattern of failures on the display.

Following is a summary of the Mode 4 tests including the attenuator and gain settings.

Data Segment	Output (mV)	XMTR Course Atten.	XMTR Fine Atten.	Wideband Auto Amp. Gain	Results Displayed
1	1199	-10dB	0dB	-10dB	-10000 +-100
2	1199	0dB	-10dB	-10dB	-10000 +-100
3	1199	-20dB	0dB	0dB	0 +-100
4	1199	-10dB	-10dB	0dB	0 +-100
5	1199	-30dB	0dB	+10dB	10000 +-100
6	1199	-20dB	-10dB	+10dB	10000 +-100
7	1199	-40dB	0dB	+20dB	20000 +-100
8	1199	-30dB	-10dB	+20dB	20000 +-100
9	1199	-50dB	0dB	+30dB	30000 +-100
10	1199	-40dB	-10dB	+30dB	30000 +-100
11	1199	-60dB	0dB	+40dB	40000 +-200
12	1199	-50dB	-10dB	+40dB	40000 +-200
13	1199	-70dB	0dB	+50dB	50000 +-2500
14	1199	-60dB	-10dB	+50dB	50000 +-2500
15	1199	-80dB	0dB	+60dB	60000 +10000/-5000
16	1199	-70dB	-10dB	+60dB	60000 +10000/-5000

Following is a description of the voltages and the point to check for each data segment.

For all data segments, check:

A4 TP4 for a 1004 Hz sine wave, .064 volts rms (.18 volts p-p).
A4 TP5 for a 1004 Hz sine wave, 0.64 volts rms (1.8 volts p-p).

Note: For data segment 11 through 16, A4 TP4 reads the value given above for the first few seconds, then it is distorted by noise.

Points to check in the transmitter:

	Check the following points for a 1004 Hz sine wave.		
Data Segment	Transmitter Output A15 TP2	Xmit fine Attenuator A15 U606 pin 6	Xmit Course Attenuator A17 U408 Pin
1	4.4 volts rms (12.5 volts p-p)	3.2 volts rms (9.1 volts p-p)	2.0 volts rms (5.7 volts p-p)
2	4.4 volts rms (12.5 volts p-p)	1.0 volts rms (2.8 volts p-p)	2.0 volts rms (5.7 volts p-p)
3	4.4 volts rms (12.5 volts	3.2 volts rms (9.1 volts p-p)	0.64 volts rms (1.8 volts p-p)
4	4.4 volts rms (12.5 volts p-p)	1.0 volts rms (2.8 volts p-p)	0.64 volts rms (1.8 volts p-p)
5	4.4 volts rms (12.5 volts p-p)	3.2 volts rms (9.1 volts p-p)	0.20 volts rms (0.57 volts p-p)
6	4.4 volts rms (12.5 volts p-p)	1.0 volts rms (2.8 volts p-p)	0.20 volts rms (0.57 volts p-p)
7	4.4 volts rms (12.5 volts p-p)	3.2 volts rms (9.1 volts p-p)	.064 volts rms (0.18 volts p-p)
8	4.4 volts rms (12.5 volts p-p)	1.0 volts rms (2.8 volts p-p)	.064 volts rms (0.18 volts p-p)
9	4.4 volts rms (12.5 volts p-p)	3.2 volts rms (9.1 volts p-p)	.020 volts rms (0.57 volts p-p)
10	4.4 volts rms (12.5 volts p-p)	1.0 volts rms (2.8 volts p-p)	.020 volts rms (.057 volts p-p)
11	4.4 volts rms (12.5 volts p-p)	3.2 volts rms (9.1 volts p-p)	.0064 volts rms (.018 volts p-p)

Data Segment	Check the following points for a 1004 Hz sine wave. Transmitter Output A15 TP2	Xmit fine Attenuator A15 U606 pin 6	Xmit Course Attenuator A17 U408 pin 1
12	4.4 volts rms (12.5 volts p-p)	1.0 volts rms (9.1 volts p-p)	.0064 volts rms (0.18 volts p-p)
13	4.4 volts rms (12.5 volts p-p)	3.2 volts rms (9.1 volts p-p)	.002 volts rms (.0057 volts p-p)
14	4.4 volts rms (12.5 volts p-p)	1.0 volts rms (2.8 volts p-p)	.002 volts rms (.0057 volts p-p)
15	4.4 volts rms (12.5 volts p-p)	3.2 volts rms (9.1 volts p-p)	.00064 volts rms (.0018 volts p-p)
16	4.4 volts rms (12.5 volts p-p)	1.0 volts rms (2.8 volts p-p)	.00064 volts rms (.0018 volts p-p)

Note: For segments 10 through 16, the A17 U408 pin signal reads the value given for the first few seconds, then it is distorted by noise.

8-25. MODE 5: Narrowband Autorange Amplifier Check (A4, A15, A17)

This mode checks the receiver fine attenuator and the narrowband autorange amplifier on A4.

Following is a summary of the Mode 5 tests including the attenuator and gain settings.

Data Segment	Output (mV)	XMTR Course Atten.	RCVR Fine Atten.	Narrowband Auto Amp. Gain	Results Displayed
1	1199	-10dB	0dB	-10dB	-10000 +-200
2	1199	0dB	-10dB	-10dB	-10000 +-200
3	1199	-20dB	0dB	0dB	0 +-200
4	1199	-10dB	-10dB	0dB	0 +-200
5	1199	-30dB	0dB	+10dB	10000 +-200
6	1199	-20dB	-10dB	+10dB	10000 +-200
7	1199	-40dB	0dB	+20dB	20000 +-200
8	1199	-30dB	-10dB	+20dB	20000 +-200
9	1199	-50dB	0dB	+30dB	30000 +-200
10	1199	-40dB	-10dB	+30dB	30000 +-200
11	1199	-60dB	0dB	+40dB	40000 +-200
12	1199	-50dB	-10dB	+40dB	40000 +-200
13	1199	-70dB	0dB	+50dB	50000 +-2500
14	1199	-60dB	-10dB	+50dB	50000 +-2500
15	1199	-80dB	0dB	+60dB	60000 +10000/-5000
16	1199	-70dB	-10dB	+60dB	60000 +10000/-5000

Following is a description of the voltages and the points to check for each data segment.

There are two tables, one for points to check in the transmitter and one for points to check in the receiver.

Points to check in the transmitter.

	Check the following points for a 1004 Hz sine wave.		
Data Segment	Transmitter Output A15 TP2	Xmit Fine Attenuator A15 U606 pin 6	Xmit Coarse Attenuator A17 U408 pin 1
1	4.4 volts rms (12.5 volts p-p)	1.0 volts rms (2.8 volts p-p)	2.0 volts rms (5.7 volts p-p)
2	4.4 volts rms (12.5 volts p-p)	3.2 volts rms (9.1 volts p-p)	6.4 volts rms (18 volts p-p)
3	4.4 volts rms (12.5 volts p-p)	1.0 volts rms (2.8 volts p-p)	0.64 volts rms (1.8 volts p-p)
4	4.4 volts rms (12.5 volts p-p)	3.2 volts rms (9.1 volts p-p)	2.0 volts rms (5.7 volts p-p)
5	4.4 volts rms (12.5 volts p-p)	1.0 volts rms (2.8 volts p-p)	0.20 volts rms (0.57 volts p-p)
6	4.4 volts rms (12.5 volts p-p)	3.2 volts rms (9.1 volts p-p)	0.64 volts rms (1.8 volts p-p)
7	4.4 volts rms (12.5 volts p-p)	1.0 volts rms (2.8 volts p-p)	.064 volts rms (0.18 volts p-p)
8	4.4 volts rms (12.5 volts p-p)	3.2 volts rms (9.1 volts p-p)	0.20 volts rms (0.57 volts p-p)
9	4.4 volts rms (12.5 volts p-p)	1.0 volts rms (2.8 volts p-p)	.020 volts rms (0.57 volts p-p)
10	4.4 volts rms (12.5 volts p-p)	3.2 volts rms (9.1 volts p-p)	.064 volts rms (0.18 volts p-p)
11	4.4 volts rms (12.5 volts p-p)	1.0 volts rms (2.8 volts p-p)	.0064 volts rms (.018 volts p-p)
12	4.4 volts rms (12.5 volts p-p)	3.2 volts rms (9.1 volts p-p)	.020 volts rms (.057 volts p-p)
13	4.4 volts rms (12.5 volts p-p)	1.0 volts rms (2.8 volts p-p)	.002 volts rms (.0057 volts p-p)
14	4.4 volts rms (12.5 volts p-p)	3.2 volts rms (9.1 volts p-p)	.0064 volts rms (.018 volts p-p)

Data Segment	Transmitter Output A15 TP2	Xmit Fine Attenuator A15 U606 pin 6	Xmit Coarse Attenuator A17 U408 pin 1
15	4.4 volts rms (12.5 volts p-p)	1.0 volts rms (2.8 volts p-p)	064 volts rms (.0018 volts p-p
16	4.4 volts rms (12.5 volts p-p)	3.2 volts rms (9.1 volts p-p)	.002 volts rms (.0057 volts p-p)

NOTE: For segments 11 through 16, the A17 U408 pin 1 signal reads the value given for the first few seconds, then it is distorted by noise.

Points to check in the receiver.

Check the following points for a 1004 Hz sine wave.

Data Segment	Narrowband Autorange Amplifier A4 TP3	Narrowband Autorange Amplifier A4 TP 1	Narrowband fine Attenuator A4 TP2
1	2.0 volts rms (5.7 volts p-p)	.64 volts rms (1.8 volts p-p)	.64 volts rms (1.8 volts p-p)
2	6.4 volts rms (18 volts p-p)	2.0 volts rms (5.7 volts p-p)	.64 volts rms (1.8 volts p-p)
3	.64 volts rms (1.8 volts p-p)	.64 volts rms (1.8 volts p-p)	.64 volts rms (1.8 volts p-p)
4	2.0 volts rms (5.7 volts p-p)	2.0 volts rms (5.7 volts p-p)	.64 volts rms (1.8 volts p-p)
5	.20 volts rms (057 volts p-p)	.64 volts rms (1.8 volts p-p)	.64 volts rms (1.8 volts p-p)
6	.64 volts rms (1.8 volts p-p)	2.0 volts rms (5.7 volts p-p)	.64 volts rms (1.8 volts p-p)
7	.064 volts rms (0.18 volts p-p)	.64 volts rms (1.8 volts p-p)	.64 volts rms (1.8 volts p-p)
8	.20 volts rms (.57 volts p-p)	2.0 volts rms (5.7 volts p-p)	.64 volts rms (1.8 volts p-p)
9	.020 volts rms (.057 volts p-p)	.64 volts rms (1.8 volts p-p)	.64 volts rms (1.8 volts p-p)
10	.064 volts rms (0.18 volts p-p)	2.0 volts rms (5.7 volts p-p)	.64 volts rms (1.8 volts p-p)
11	.0064 volts rms (.018 volts p-p)	.64 volts rms (1.8 volts p-p)	.64 volts rms (1.8 volts p-p)
12	.020 volts rms (.057 volts p-p)	2.0 volts rms (5.7 volts p-p)	.64 volts rms (1.8 volts p-p)
13	.002 volts rms (.0057 volts p-p)	.64 volts rms (1.8 volts p-p)	.64 volts rms (1.8 volts p-p)
14	.0064 volts rms (.018 volts p-p)	2.0 volts rms (5.7 volts p-p)	.64 volts rms (1.8 volts p-p)

Data Segment	Narrowband Autorange Amplifier A4 TP3	Narrowband Autorange Amplifier A4 TP 1	Narrowband fine Attenuator A4 TP2
15	.00064 volts rms (.0018 volts p-p)	.64 volts rms (1.8 volts p-p)	.64 volts rms (1.8 volts p-p)
16	.002 volts rms (.0057 volts p-p)	2.0 volts rms (5.7 volts p-p)	.64 volts rms (1.8 volts p-p)

Note: For segments 9 through 16, the signal reads the value given for the first few seconds, then it may be distorted by noise.

8-26. MODE 6: Frequency Counter and Crystal Check (A14, A17, A8)

This mode connects the self test signal ST16 from A15 directly to the A4 input multiplexer. A 625 Hz, .775 Vrms sine wave is transmitted and measured by the A8 frequency counter. The transmitter is then driven in sequence by the following clock signals.

- A 10 kHz clock derived from the 1 MHz system clock
- The 16 kHz clock from A11
- The 131 kHz clock from A14
- The 16 kHz from A11
- The 131 kHz from a crystal on A14
- The 524 kHz from the crystal on A14
- The 1 MHz from the crystal on A14

This helps to isolate bad oscillators as well as verifying A8 operation. Since the transmitter output is 1000 Hz with the 16 kHz clock, it is measured in both narrowband and wideband channels.

Diagnostics - Mode 6

Following is a summary of the Mode 6 tests.

Data Segment	Test	Results Displayed	Path
1	625 Hz from A17 (wide)	625 +/- 0	1
2	1000 Hz from A17 (narrow)	1000 +/- 0	2
3	1000 Hz from A17 (wide)	1000 +/- 0	3
4	8192 Hz from A17 (wide)	8192 +/- 0	4
5	32768 Hz from A17 (wide)	3276 +1/-0	5
6	65536 Hz from A17 (wide)	6553 +1/-0	6

7 thru 16 not used

A signal from A17 sets the transmitter to the frequency for the particular segment. The signal level is .775 Vrms. The signal is input to the receiver at the A1 multiplexer. The frequency is read at the A8 wideband channel for paths 1 and 3 through 6. The narrowband channel is used for path 2.

General Mode 6 Troubleshooting

If all the paths fail, A8 is not functioning.

If path 2 fails, suspect the narrowband frequency measuring circuit.

If path 1 and segments 3 through 6 fail, the wideband frequency circuit isn't working.

If an individual path fails, the corresponding transmitter clock is bad.

A failure of only the high frequency paths may indicate receiver or transmitter bandwidth problems.

Following is a description of the Mode 6 paths.

Path 1

A 625 Hz, .775 Vrms sine wave from A15 is input to the A4 multiplexer and measured using the A8 wideband channel.

To isolate a failure, first verify the transmitter output at A15 TP2. Look for a 625 Hz sine wave at 12.6 volts peak-to-peak. Due to slow sampling rate, the stair-steps are not filtered out.

If the transmitter output is good, check the following.

Check A4 TP5 for a 625 Hz sine wave, 2.2 volts p-p. Due to slow sampling rate, the stair-steps are not filtered out.

Check A8 U104 pin 10 for a 625 Hz square wave (2 millisecond period).

Check A8 U101 pin 4 for repetitive bursts of the 625 Hz square wave.

Check A8 U205 pin 10 for a 262 kHz square wave (3.8 microsecond period). This is the A14 clock reference. If this reference is bad, check the oscillator, A14 U400 pin 10 and A14 U701 pin 8 for the 262 kHz square wave.

Check A8 U102 pin 4 for repetitive bursts of the 262 kHz square wave.

If the above checks are good, suspect A8 U102 and U103, or the decoding circuits, A8 U204, U304, U305, U404 and U504.

If the transmitter output is bad, check the following.

Check A14 U700 pin 4 for a 1 MHz square wave from A1 (1 microsecond period).

Check A14 U600 pin 15 (TP 10K) for a 10 kHz square wave (100 microsecond period. A14 U703 pin 8 should have the same signal

Check A15 TP3 for a stair-step approximation of the 625 Hz sine wave. See Figure Mode 6 - 1.

Path 2

A 1000 Hz, .775 Vrms signal from A15 is input to the A4 multiplexer and measured using the A8 narrowband channel.

To isolate a failure, first verify the transmitter output by checking A15 TP2 for a 1000 Hz sine wave, 12.6 volts p-p.

If the transmitter output is good, check the following.

Check A4 TP1 for a 1000 Hz sine wave, 2.2 volts p-p. Due to slow sampling rate, stair-steps are not filtered out.

Check A8 U105 pin 9 for a 1000 Hz square wave (1 millisecond period).

Check A8 U103 pin 4 for repetitive bursts of the 1000 Hz square wave.

Check A8 U205 pin 10 for a 262 kHz square wave (3.8 microsecond period). This is the A14 clock reference. If this reference is bad, check the oscillator, A14 U400 pin 10 and A14 U701 pin 8 for the 262 kHz square wave.

Check A8 U102 pin 4 for repetitive bursts of the 262 kHz square wave.

If the above checks are good, suspect A8 U102 and U103, or the decoding circuits, A8 U204, U304, U305, U404 and U504.

If the transmitter output is bad, check the following.

Check A14 U700 pin 4 for a 1 MHz square wave from A1 (1 microsecond period).

Check A14 U600 pin 13 (TP 16K) for a 16 kHz square wave (62.5 microseconds period). A14 U702 pin 8 should have the same signal.

Check A15 TP3 for a stair-step approximation of the 1000 Hz sine wave. Similar to Figure Mode 6 - 1.

Path 3

A 1000 Hz, .775 Vrms signal from A15 is input to the A4 multiplexer and measured using the A8 wideband channel.

To isolate a failure, first verify the transmitter output by checking A15 TP2 for a 1000 Hz sine wave, 12.6 volts p-p.

If the transmitter output is good, check the following.

Check A4 TP5 for a 1000 Hz sine wave, 2.2 volts p-p. Due to slow sampling rate, stair-steps are not filtered out.

Check A8 U104 pin 10 for a 1000 Hz square wave (1 millisecond period).

Check A8 U103 pin 4 for repetitive bursts of the 1000 Hz square wave.

Check A8 U205 pin 10 for a 262 kHz square wave (3.8 microsecond period). This is the A14 clock reference. If this reference is bad, check the oscillator, A14 U400 pin 10 and A14 U701 pin 8 for the 262 kHz square wave.

Check A8 U102 pin 4 for repetitive bursts of the 262 kHz square wave.

If the above checks are good, suspect A8 U102 and U103, or the decoding circuits, A8 U204, U304, U305, U404 and U504.

If the transmitter output is bad, check the following.

Check A14 U700 pin 4 for a 1 MHz square wave from A1 (1 microsecond period).

Check A14 U600 pin 13 (TP 16K) for a 16 kHz square wave (62.5 microseconds period). A14 U702 pin 8 should have the same signal.

Check A15 TP3 for a stair-step approximation of the 1000 Hz sine wave. Similar to Figure Mode 6 - 1.

Path 4

A 8192 Hz, .775 Vrms signal from A15 is input to the A4 multiplexer and measured using the A8 wideband channel.

To isolate a failure, first verify the transmitter output by checking A15 TP2 for a 8192 Hz sine wave, 12.6 volts p-p.

If the transmitter output is good, check the following.

Check A4 TP5 for a 8192 Hz sine wave, 2.2 volts p-p. Due to slow sampling rate, stair-steps are not filtered out.

Check A8 U104 pin 10 for a 8192 Hz square wave (122 microsecond period).

Check A8 U103 pin 4 for repetitive bursts of the 8192 Hz square wave.

Check A8 U205 pin 10 for a 262 kHz square wave (3.8 microsecond period). This is the A14 clock reference. If this reference is bad, check the oscillator, A14 U400 pin 10 and A14 U701 pin 8 for the 262 kHz square wave.

Check A8 U102 pin 4 for repetitive bursts of the 262 kHz square wave.

If the above checks are good, suspect A8 U102 and U103, or the decoding circuits, A8 U204, U304, U305, U404 and U504.

If the transmitter output is bad, check the following.

Check A14 U400 pin 10 for a 4.19 MHz square wave (.238 microsecond period).

Check A14 U600 pin 3 for a 131 kHz square wave (7.6 microsecond period).
A14 U702 pin 8 should have the same signal.

Check A15 TP3 for a stair-step approximation of the 8192 Hz sine wave. Similar to Figure Mode 6 - 1.

Path 5

A 32768 Hz, .775 Vrms signal from A15 is input to the A4 multiplexer and measured using the A8 wideband channel.

To isolate a failure, first verify the transmitter output by checking A15 TP2 for a 32768 Hz sine wave, 12.6 volts p-p.

If the transmitter output is good, check the following.

Check A4 TP5 for a 32768 Hz sine wave, 2.2 volts p-p.

Check A8 U104 pin 10 for a 32768 Hz square wave (30.5 microsecond period).

Check A8 U103 pin 4 for repetitive bursts of the 32768 Hz square wave.

Check A8 U205 pin 10 for a 262 kHz square wave (3.8 microsecond period). This is the A14 clock reference. If this reference is bad, check the oscillator, A14 U400 pin 10 and A14 U701 pin 8 for the 262 kHz square wave.

Check A8 U102 pin 4 for repetitive bursts of the 262 kHz square wave.

If the above checks are good, suspect A8 U102 and U103, or the decoding circuits, A8 U204, U304, U305, U404 and U504.

If the transmitter output is bad, check the following.

Check A14 U400 pin 10 for a 4.19 MHz square wave (.238 microsecond period).

Check A14 U600 pin 4 for a 524 kHz square wave (1.9 microsecond period).

A14 U702 pin 8 should have the same signal.

Check A15 TP3 for a stair-step approximation of the 32768 Hz sine wave. Similar to Figure Mode 6 - 1.

Path 6

A 65536 Hz, .775 Vrms signal from A15 is input to the A4 multiplexer and measured using the A8 wideband channel.

To isolate a failure, first verify the transmitter output by checking A15 TP2 for a 65536 Hz sine wave, 12.6 volts p-p.

If the transmitter output is good, check the following.

Check A4 TP5 for a 65536 Hz sine wave, 2.2 volts p-p.

Check A8 U104 pin 10 for a 65536 Hz square wave (15.2 microsecond period).

Check A8 U103 pin 4 for repetitive bursts of the 66536 Hz square wave.

Check A8 U205 pin 10 for a 262 kHz square wave (3.8 microsecond period). This is the A14 clock reference. If this reference is bad, check the oscillator, A14 U400 pin 10 and A14 U701 pin 8 for the 262 kHz square wave.

Check A8 U102 pin 4 for repetitive bursts of the 262 kHz square wave.

If the above checks are good, suspect A8 U102 and U103, or the decoding circuits, A8 U204, U304, U305, U404 and U504.

If the transmitter output is bad, check the following.

Check A14 U400 pin 10 for a 4.19 MHz square wave (.238 microsecond period).

Check A14 U600 pin 2 for a 1 MHz square wave (1 microsecond period). A14 U702 pin 8 should have the same signal.

Check A15 TP3 for a stair-step approximation of the 65536 Hz sine wave. Similar to Figure Mode 6 - 1.

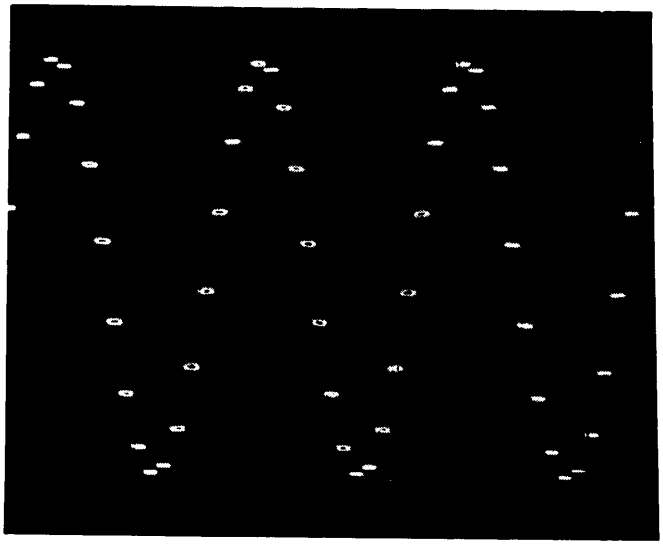

Vert: 1 V/div
Horiz: depends on frequency

Figure Mode 6-1

Figure 8-8. Mode 6 Waveforms

8-27. MODE 7: Transmitter Single Tone Check (A14, A15, A17, A8)

This mode connects the self test signal output from A15 directly to the A4 input multiplexer. A 32 Hz, .775 Vrms sine wave is transmitted and measured by the A8 frequency counter. The bits in the transmitter frequency counter are changed one at a time to produce higher subsequent frequencies. Any errors in the fractional-N synthesizer show up as frequency offsets during the test. The frequencies change in the order listed below.

Following is a summary of the Mode 7 tests.

Data Segment	Frequency and Results
1	32 +/- 0
2	33 +/- 0
3	34 +/- 0
4	36 +/- 0
5	40 +/- 0
6	48 +/- 0
7	64 +/- 0
8	128 +/- 0
9	256 +/- 0
10	512 +/- 0
11	1024 +/- 0
12	2048 +/- 0
13	4096 +/- 0
14	8192 +/- 0
15	16384 (display 1638 +0/-1)
16	32768 (display 3276 +1/-0)

The transmitter transmits frequencys sequentially in the order listed above. The signal level from A15 is .775 Vrms. The signal is input to A4 and is measured on the A8 wideband channel.

General Mode 7 Troubleshooting

If all paths fail, A8 is not functioning.

If one or several paths fail, one or more bits are stuck in the A14 synthesizer.

If only the high frequency paths fail, a bandwidth problem may exist in the receiver.

Diagnostics - Mode 7

Following is a description of the Mode 7 data segments.

To isolate a failure, first check the transmitter output, 15 TP2, for a sinewave of the frequency shown in the "Receiver Checks" table below.

If the transmitter output is good, proceed with the receiver checks.

If the transmitter output is not present or distorted, proceed with the transmitter checks.

For all segments:

Check A8 U205 pin 10 for a 262 kHz square wave (3.8 microsecond period). This is the reference from A14. If this signal is bad, check the A14 oscillator, A14 U400 pin 10 and A14 U701 pin 8, for the 262 kHz square wave.

Check A8 U102 pin 4 for repetitive bursts of the 262 kHz square wave.

If all the above checks are good, suspect A8 U102 and U103 or the decoding circuits A8 U204, U304, U305, U404 and U504.

Receiver Checks

Check the following points in the receiver.

Data Segment	Xmit Freq	Period	A15 TP2	A4 TP5	A8 U104 pin 10	A8 U103 pin 4
1	32 Hz	31 ms	sine wave 12.6 volts p-p	sine wave 2.2 volts p-p	square wave	repetitive bursts of the square wave
2	33 Hz	30 ms				
3	34 Hz	29 ms				
4	36 Hz	28 ms				
5	40 Hz	25 ms				
6	48 Hz	20 ms				
7	64 Hz	15 ms				
8	128 Hz	7.8 ms				
9	256 Hz	3.9 ms				
10	512 Hz	2 ms				
11	1024 Hz	1 ms				
12	2048 Hz	500 us				
13	4096 Hz	240 us				
14	8192 Hz	120 us				
15	16384 Hz	60 us				
16	32768 Hz	30 us				

Transmitter Checks

If the sine wave at A15 TP2 is not present or distorted, check A15 TP3 for A15 TP3 for stairstep approximation of the sine wave (frequency depends on data segment). See Figure MOde 7-1.

If this waveform is good, suspect the 175 kHz low pass filter on A15 (U102 and U204).

If the A15 TP3 waveform is not correct, then suspect the fractional-N synthesizer on A14 or the waveform ROM on A15.

No Transmitter Output

If A14 does not transmit in any test setup or in diagnostic modes 7 and 8, use the following procedure to verify the problem.

Set the transmitter to 65,536 Hz in Level/Frequency (or Mode 7 Segment 16).

Waveform address lines WA6 through WA9 should be square waves of increasing frequency. If the waveforms are present, then the problem is probably on A15 or A17.

If the waveforms are not present, then check the two clock lines. A14 U105 pin 11 and A14 U206 pin 12 should have a 524,270 Hz square wave.

The following control lines should be LOW.

U206 pin 13, U206 pin 14, U405 pin 4, U405 pin 5

Check the frequency latch data. All the MSB and LSB line should be low except for MSB7 which should be high.

When these conditions are met, the A14 synthesizer should be working.

If WA6 is not toggling, then the problem is in the adder/ accumulator loop.

A14 Synthesizer Checks

Use the following table to check the fractional-N synthesizer on A14. By noting the incorrect frequencies, a failure can be isolated.

Notice that only the upper address latches are being checked in the table. If an error occurs while using the table, the problem may be in the lower address latches. See the procedure after the table to check the lower address latches.

Diagnostics - Mode 7

Waveform ROM Address Bus

Seg	WA0	WA1	WA2	WA3	WA4	WA5	WA6	WA7	WA8	WA9	WA11
1	16384	8192	4096	2048	1024	512	256	128	64	32	16
2	16895	8448	4224	2112	1056	528	264	132	66	33	16.5
3	17408	8704	4352	2176	1088	544	272	136	68	34	17
4	18432	9216	4608	2304	1152	576	288	144	72	36	18
5	20480	10240	5120	2560	1280	640	320	160	80	40	20
6	24576	12288	6144	3072	1536	768	384	192	96	48	24
7	32768	16384	8192	4096	2048	1024	512	256	128	64	32
8	65536	32768	16384	8192	4096	2048	1024	512	256	128	64
9	131070	65536	32768	16384	8192	4096	2048	1024	512	256	128
10	262132	131070	65536	32768	16384	8192	4096	2048	1024	512	256
11	*	262132	131070	65536	32768	16384	8192	4096	2048	1024	512
12	*	*	262132	131070	65536	32768	16384	8192	4096	2048	1024
13	*	*	*	262132	131070	65536	32768	16384	8192	4096	2048
14	*	*	*	*	262132	131070	65536	32768	16384	8192	4096
15	*	*	*	*	*	262132	131070	65536	32768	16384	8192
16	*	*	*	*	*	*	262132	131070	65536	32768	16384

* Changes logic levels when the segment starts

Lower Address Latch Checks

To check the lower address latches, select the IMD test setup and check the following points for square waves.

U101 pins 2, 5, 6, 9, 12, 15, 16 and 19

U104 pins 2, 5, 6, 9, 12 and 15

Synthesizer Control Signals

If the synthesizer appears to be operating correctly, you might also want to check the control signals to the synthesizer.

Control signal states for various test setups and diagnostic modes are given in the table below.

Points to test

Instrument Setup Condition	Address Accumulator Select Lines		W EN	Frequency Latch Read Select		Address Latch Clock	WA-10
	U601 pin 5	U601 pin 9	U501 pin 10	U501 pin 1	U502 pin 11	U702 pin 8	U601 pin 11
Level/Freq	LOW	LOW	524 kHz	LOW	LOW	524 kHz	LOW
Env. Delay	LOW	LOW	524 kHz	LOW	LOW	524 kHz	LOW
IMD	65 kHz	32 kHz	131 kHz	65 kHz	32 kHz	131 kHz	LOW
P/AR	LOW	LOW	16 kHz	LOW	LOW	16 kHz	HIGH
Return Loss	LOW	LOW	10 kHz	LOW	LOW	10 kHz	LOW
Master/Slave	65 kHz	LOW	131 kHz	65 kHz	FSK	131 kHz	LOW
Diag Mode 7	LOW	LOW	524 kHz	LOW	LOW	524 kHz	LOW
Diag Mode 8	LOW	LOW	1.048 MHz	LOW	LOW	1.048 MHz	LOW
Diag Mode 18 Segment 7	65 kHz	LOW	131 kHz	65 kHz	LOW	131 kHz	LOW

Following is a summary of the control signals from the A14 transmit control latch, A14 U803.

Control signal states for various test setups and diagnostic mode 7 are given in the table below.

Points to test

Instrument Setup Condition	U803							
	pin 2	pin 5	pin 6	pin 9	pin 12	pin 15	pin 16	pin 19
Level/Freq	LOW	LOW	HIGH	HIGH	LOW	LOW	LOW	LOW
Env. Delay	LOW	LOW	HIGH	HIGH	LOW	LOW	LOW	HIGH
IMD	LOW	LOW	LOW	LOW	LOW	HIGH	LOW	LOW
P/AR	LOW	LOW	HIGH	HIGH	HIGH	HIGH	LOW	LOW
Return Loss	LOW	HIGH	HIGH	HIGH	LOW	LOW	LOW	LOW
Master/Slave	HIGH	LOW	HIGH	LOW	LOW	HIGH	LOW	LOW
Diag Mode 7	LOW	LOW	HIGH	HIGH	LOW	LOW	LOW	LOW

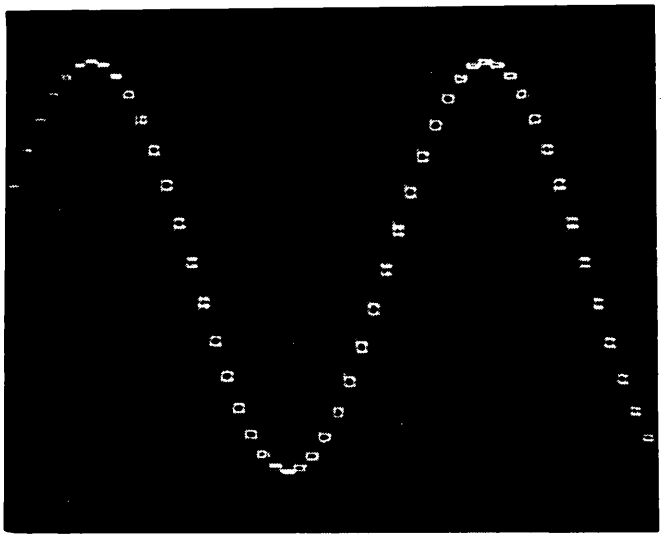

Vert: 1 V/div
Horiz: depends on frequency

Figure Mode 7-1

8-28. MODE 8: Transmitter Multi-tone Check (A14, A8)

This mode connects the A15 self test signal output directly to the A4 input multiplexer. Four frequencies are sequentially applied to A14 U402, U403, U404 and U405 with latch address 2 (01) selected. The test then repeats using latch addresses three (10) and four (11). These frequencies are read by the A8 frequency counter. Any errors in the multi-tone system appear as frequency offsets.

Following is a summary of the Mode 8 tests.

Data Segment	Test	Results Displayed	Path
1	Latch Add. 2, 15 Hz	15 +/- 0	1
2	Latch Add. 2, 240 Hz	240 +/- 0	2
3	Latch Add. 2, 3840 Hz	3840 +/- 0	3
4	Latch Add. 2, 61440 Hz	6144 +/- 0	4
5	not used		
6	Latch Add. 3, 15 Hz	15 +/- 0	5
7	Latch Add. 3, 240 Hz	240 +/- 0	6
8	Latch Add. 3, 3840 Hz	3840 +/- 0	7
9	Latch Add. 3, 61440 Hz	6144 +/- 0	8
10	not used		
11	Latch Add. 4, 15 Hz	15 +/- 0	9
12	Latch Add. 4, 240 Hz	240 +/- 0	10
13	Latch Add. 4, 3840 Hz	3840 +/- 0	11
14	Latch Add. 4, 61440 Hz	6144 +/- 0	12
15, 16	not used		

General Mode 8 Troubleshooting

If all segments fail, the A14 multi-tone switching control failed (U501, U502 and U601).

If one or several segments fail, one or more bits are stuck in one of the A14 frequency latches (U402, U403, U404 and U405).

If the high frequency segments fail, a bandwidth problem may exist in the receiver.

Following is a description of each Mode 8 path.

Paths 1 thru 4 (Data Segments 1 thru 4)

A .775 Vrms signal (at the frequency listed below) from A15 is sent to the A4 input multiplexer. The frequency is measured on A8 using the wideband channel. The frequency is generated on A14 using latch address 2.

Path	Frequency
1	15 Hz
2	240 Hz
3	3840 Hz
4	61440 Hz

Check A15 TP2 for a sine wave at the appropriate frequency, 6.6 volts p-p (See Figure Mode 8 - 1).

Check A15 TP3 for a stair-step approximation of the sine wave (Same as Figure Mode 3 - 2).

Paths 5 thru 8 (Data Segments 6 thru 9)

A .775 Vrms signal (at the frequency listed below) from A15 is sent to the A4 input multiplexer. The frequency is measured on A8 using the wideband channel. The frequency is generated on A14 using latch address 3.

Path	Frequency
5	15 Hz
6	240 Hz
7	3840 Hz
8	61440 Hz

Check A15 TP2 for a sine wave at the appropriate frequency, 6.6 volts p-p (See Figure Mode 8 - 1).

Check A15 TP3 for a stair-step approximation of the sine wave (Same as Figure Mode 3 - 2).

Paths 9 thru 12 (Data Segments 11 thru 14)

A .775 Vrms signal (at the frequency listed below) from A15 is sent to the A4 input multiplexer. The frequency is measured on A8 using the wideband channel. The frequency is generated on A14 using latch address 4.

Path	Frequency
9	15 Hz
10	240 Hz
11	3840 Hz
12	61440 Hz

Check A15 TP2 for a sine wave at the appropriate frequency, 6.6 volts p-p (See Figure Mode 8 - 1).

Check A15 TP3 for a stair-step approximation of the sine wave (Same as Figure Mode 3 - 2).

Following is a summary of the control latch outputs for each Mode 8 segment.

	A14 U803							
Segment	pin 2	pin 5	pin 6	pin 9	pin 12	pin 15	pin 16	pin 19
1 thru 4	LOW	HIGH	HIGH	LOW	LOW	HIGH	LOW	LOW
6 thru 9	LOW	HIGH	LOW	HIGH	LOW	HIGH	LOW	LOW
11 thru 14	LOW	HIGH	LOW	LOW	LOW	HIGH	LOW	LOW

	A14 U501		
Segment	pin 1	pin 4	pin 10
1 thru 4	LOW	HIGH	524 KHz
6 thru 9	HIGH	LOW	524 KHz
11 thru 14	HIGH	HIGH	524 KHz

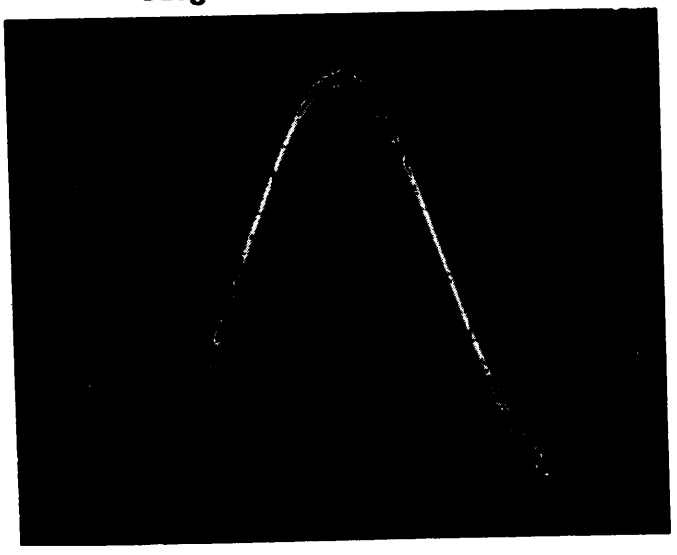

Vert: 1 V/div
Horiz: depends on frequency

Figure Mode 8-1

Figure 8-9. Mode 8 Waveforms

8-29. MODE 9: Transmitter Filter Sweep (A15)

This mode connects the A15 self test signal output to the A4 input multiplexer. Two frequencies are applied to the two A15 low pass filters and three frequencies are applied to the A15 IMD band-pass filter. These signals are at a .775 Vrms level. The level of each frequency is measured at the filter output to verify the filter performance. Errors in the midband gain and errors in the filter shapes should show up as level errors. Frequency errors indicate severe filter distortion or failure to pass the signal.

Following is a summary of the Mode 9 tests.

Data Segment	Test	Results Displayed	Path
1	2500 Hz	2500 +- 10	1
2	0.0 dBm	0.0 +- .5	1
3	10000 Hz	10000 +-10	2
4	-18.0 dBm	-18 +- 1	2
5	not used		
6	1200 Hz	1200 +- 10	3
7	1.5 dBm	+1.5 +- .5	3
8	4800 Hz	4800 +- 10	4
9	-21.0 dBm	-21 +- 1	4
10	not used		
11	500 Hz	500 +- 10	5
12	-30.0 dBm	-30 +- 2	5
13	1120 Hz	1120 +- 10	6
14	0.0 dBm	0.0 +- .5	6
15	1600 Hz	1600 +- 10	7
16	-9.0 dBm	-9 +- 1	7

General Mode 9 Troubleshooting

If all paths fail, the fixed gain offset may be wrong. Try adjusting the output level adjustment on A15.

If one or more of the paths fail, the corresponding filter is bad.

If only paths 5, 6 and 7 fail, the two adjustments in the IMD filter may need adjusting to correct the response curve.

Following is a description of the Mode 9 paths.

Path 1 (Data Segments 1 and 2)

A 2500 Hz, .775 Vrms sine wave is sent through the A15, 5 kHz low pass filter and then input to the A4 input multiplexer. The level is measured with the full wave average wideband detector and the frequency is measured on A8.

Check A15 U102 pin 6 for a 2500 Hz sine wave, 6.3 volts p-p. This is the filter input.

Check A15 U103 pin 1 for a 2500 Hz sine wave, 12.4 volts p-p. This is the filter output. The same signal should be on A15 TP2.

Check A15 U607 pin 6 for a 2500 Hz sine wave, 2.2 volts p-p. This verifies the analog switches and the fine attenuator.

Path 2 (Data Segments 3 and 4)

A 10000 Hz, .775 Vrms sine wave is sent through the A15, 5 kHz low pass filter and then input to the A4 input multiplexer. The level is measured with the full wave average wideband detector and the frequency is measured on A8.

Check A15 U102 pin 6 for a 10000 Hz sine wave, 6.3 volts p-p. This is the filter input.

Check A15 U103 pin 1 for a 10000 Hz sine wave, 1.5 volts p-p. This is the filter output. The same signal should be on A15 TP2.

Check A15 U607 pin 6 for a 10000 Hz sine wave, 0.27 volts p-p. This verifies the analog switches and the fine attenuator.

Path 3 (Data Segments 6 and 7)

A 1200 Hz, .775 Vrms sine wave is sent through the A15, R.L. low pass filter and then input to the A4 input multiplexer. The level is measured with the full wave average wideband detector and the frequency is measured on A8.

Check A15 U102 pin 6 for a 1200 Hz sine wave, 6.3 volts p-p. This is the filter input.

Check A15 U103 pin 7 for a 1200 Hz sine wave, 14.8 volts p-p. This is the filter output. The same signal should be on A15 TP2.

Check A15 U607 pin 6 for a 1200 Hz sine wave, 2.6 volts p-p. This verifies the analog switches and the fine attenuator.

Path 4 (Data Segments 8 and 9)

A 4800 Hz, .775 Vrms sine wave is sent through the A15, R.L. low pass filter and then input to the A4 input multiplexer. The level is measured with the full wave average wideband detector and the frequency is measured on A8.

Check A15 U102 pin 6 for a 4800 Hz sine wave, 6.3 volts p-p. This is the filter input.

Check A15 U103 pin 7 for a 4800 Hz sine wave, 1.1 volts p-p. This is the filter output. The same signal should be on A15 TP2.

Check A15 U607 pin 6 for a 4800 Hz sine wave, 0.2 volts p-p. This verifies the analog switches and the fine attenuator.

Path 5 (Data Segments 11 and 12)

A 500 Hz, .775 Vrms sine wave is sent through the A15, IMD band-pass filter and then input to the A4 input multiplexer. The level is measured with the full wave average wideband detector and the frequency is measured on A8.

Check A15 U102 pin 6 for a 500 Hz sine wave, 6.3 volts p-p. This is the filter input.

Check A15 U105 pin 1 for a 500 Hz sine wave, 4.5 volts p-p. This is the output of the first stage.

Check A15 U207 pin 1 for a 500 Hz sine wave, 0.63 volts p-p. This is the output of the second stage.

Check A15 U307 pin 1 for a 500 Hz sine wave, 0.4 volts p-p. This is the output of the third stage.

Check A15 U607 pin 6 for a 500 Hz sine wave, .075 volts p-p. This verifies the analog switches and the fine attenuator.

Path 6 (Data Segments 13 and 14)

A 1120 Hz, .775 Vrms sine wave is sent through the A15, IMD bandpass filter and then input to the A4 input multiplexer. The level is measured with the full wave average wideband detector and the frequency is measured on A8.

Check A15 U102 pin 6 for a 1120 Hz sine wave, 6.3 volts p-p. This is the filter input.

Check A15 U105 pin 1 for a 1120 Hz sine wave, 18 volts p-p. This is the output of the first stage.

Check A15 U207 pin 1 for a 1120 Hz sine wave, 12.2 volts p-p. This is the output of the second stage.

Check A15 U307 pin 1 for a 1120 Hz sine wave, 12.2 volts p-p. This is the output of the third stage.

Check A15 U607 pin 6 for a 1120 Hz sine wave, 2.2 volts p-p. This verifies the analog switches and the fine attenuator.

Path 7 (Data Segments 15 and 16)

A 1600 Hz, .775 Vrms sine wave is sent through the A15, IMD bandpass filter and then input to the A4 input multiplexer. The level is measured with the full wave average wideband detector and the frequency is measured on A8.

Check A15 U102 pin 6 for a 1600 Hz sine wave, 6.3 volts p-p. This is the filter input.

Check A15 U105 pin 1 for a 1600 Hz sine wave, 8.2 volts p-p. This is the output of the first stage.

Check A15 U207 pin 1 for a 1600 Hz sine wave, 9.3 volts p-p. This is the output of the second stage.

Check A15 U307 pin 1 for a 1600 Hz sine wave, 4.3 volts p-p. This is the output of the third stage.

Check A15 U607 pin 6 for a 1600 Hz sine wave, 7.5 volts p-p. This verifies the analog switches and the fine attenuator.

8-30. MODE 10: Transmitter Alternate Channel Check (A17)

This mode connects the A15 self test signal directly to the A4 input multiplexer. A sine wave at 1000 Hz, .775 Vrms is output through the phase jitter calibration attenuator in the transmitter's alternate channel. Then the FSK low pass filter is checked at three frequencies to insure proper attenuation of the mark and space frequencies as well as the high frequency roll-off. Any alternate channel problems should appear in at least one of the test paths.

Following is a summary of the Mode 10 tests.

Data Segment	Test	Results Displayed	Path
1	1000 Hz	1000 +- 0	1
2	-18.5 dBm	-18.5 +- .5	1
3	Not Used		
4	800 Hz	800 +- 0	2
5	-3.0 dBm	-3.0 +- 1	2
6	1200 Hz	1200 +- 0	3
7	-3.0 dBm	-3.0 +- 1	3
8	2000 Hz	2000 +- 0	4
9	-13.0 dBm	-13 +- 1	4

10 thru 16 not used

General Mode 10 Troubleshooting

If all the paths fail, the fixed gain offset may be incorrect. Try adjusting the alternate channel level on A15.

If only path 1 fails, check the phase jitter calibration path.

If paths 2, 3 and 4 fail, the FSK filter is not functioning.

Following is a description of each test path.

Path 1 (Data Segments 1 and 2)

A 1000 Hz, .775 Vrms sine wave is sent through the A15 PJ calibration pad and input to the A4 input multiplexer. The level is measured with the A4 full wave average wideband detector and the frequency is measured on A8.

Check the alternate channel output at A15 U306 pin 6. It should be a stair-step approximation of the 1000 Hz sine wave, 6.3 volts p-p (Similar to Figure Mode 3 - 2). This signal may be quite noisy, but the steps can still be seen.

If this waveform is good, verify the PJ Cal Pad by checking for the same stair-step waveform at A15 U506 pins 1 and 16. Check for ground at A15 U506 pins 8 and 9.

If this waveform is bad, check the data lines to the alternate channel DAC (A15 U205). The pins listed below should toggle at TTL levels and at the rates shown.

U205 pin 5	1 kHz
U205 pin 6	3 kHz
U205 pin 7	7 kHz
U205 pin 8	15 kHz
U205 pin 9	31 kHz
U205 pin 10	63 kHz
U205 pin 11	127 kHz
U205 pin 12	150.5 kHz

If one or more of the lines do not toggle, suspect the alternate channel data latch U303.

If none of the lines toggle, check the alternate channel clock output at A15 U601 pin 8. The clock should be 524 kHz. If not, suspect U601 or U303.

If all the lines into U205 are toggling at the proper rates, then suspect either U205 or U306.

Path 2 (Data Segments 4 and 5)

An 800 Hz, .775 Vrms sine wave is sent through the A15 FSK low pass filter and input to the A4 input multiplexer. The level is measured with the A4 full wave average wideband detector and the frequency is measured on A8.

Check the alternate channel output at A15 U306 pin 6. It should be a stair-step approximation of the 800 Hz sine wave, 6.3 volts p-p (Similar to Figure Mode 3 - 2). This signal may be quite noisy, but the steps can still be seen.

If this waveform is good, verify the FSK low pass filter by checking for an 800 Hz, 17 volt p-p sine wave at A15 U406 pin 6 and at A15 U506 pins 3 and 4. Check for ground at A15 U506 pins 8 and 9.

If this waveform is bad, check the data lines to the alternate channel DAC (A15 U205). The pins listed below should toggle at TTL levels and at the rates shown.

U205 pin 5	800 Hz
U205 pin 6	2.4 kHz
U205 pin 7	5.6 kHz
U205 pin 8	12 kHz
U205 pin 9	24.8 kHz
U205 pin 10	50.4 kHz
U205 pin 11	101.6 kHz
U205 pin 12	142 kHz

If one or more of the lines do not toggle, suspect the alternate channel data latch U303.

If none of the lines toggle, check the alternate channel clock output at A15 U601 pin 8. The clock should be 524 kHz. If not, suspect U601 or U303.

If all the lines into U205 are toggling at the proper rates, then suspect either U205 or U306.

Path 3 (Data Segments 6 and 7)

A 1200 Hz, .775 Vrms sine wave is sent through the A15 FSK low pass filter and input to the A4 input multiplexer. The level is measured with the A4 full wave average wideband detector and the frequency is measured on A8.

Check the alternate channel output at A15 U306 pin 6. It should be a stair-step approximation of the 1200 Hz sine wave, 6.3 volts p-p (Similar to Figure Mode 3 - 2). This signal may be quite noisy, but the steps can still be seen.

If this waveform is good, verify the FSK low pass filter by checking for an 1200 Hz, 17 volt p-p sine wave at A15 U406 pin 6 and at A15 U506 pins 3 and 4.
Check for ground at A15 U506 pins 8 and 9.

If this waveform is bad, check the data lines to the alternate channel DAC (A15 U205). The pins listed below should toggle at TTL levels and at the rates shown.

U205 pin 5	1.2 kHz
U205 pin 6	3.6 kHz
U205 pin 7	8.6 kHz
U205 pin 8	18 kHz
U205 pin 9	37.2 kHz
U205 pin 10	75.6 kHz
U205 pin 11	145 kHz
U205 pin 12	134.1 kHz

If one or more of the lines do not toggle, suspect the alternate channel data latch U303.

If none of the lines toggle, check the alternate channel clock output at A15 U601 pin 8. The clock should be 524 kHz. If not, suspect U601 or U303.

If all the lines into U205 are toggling at the proper rates, then suspect either U205 or U306.

Path 4 (Data Segments 8 and 9)

A 2500 Hz, .775 Vrms sine wave is sent through the A15 FSK low pass filter and input to the A4 input multiplexer. The level is measured with the A4 full wave average wideband detector and the frequency is measured on A8.

Check the alternate channel output at A15 U306 pin 6. It should be a stair-step approximation of the 2500 Hz sine wave, 6.3 volts p-p (Similar to Figure Mode 3 - 2). This signal may be quite noisy, but the steps can still be seen.

If this waveform is good, verify the FSK low pass filter by checking for an 1200 Hz, 5.7 volt p-p sine wave at A15 U406 pin 6 and at A15 U506 pins 3 and 4.
Check for ground at A15 U506 pins 8 and 9.

If this waveform is bad, check the data lines to the alternate channel DAC (A15 U205). The pins listed below should toggle at TTL levels and at the rates shown.

U205 pin 5	2 kHz
U205 pin 6	6 kHz
U205 pin 7	14 kHz
U205 pin 8	30 kHz
U205 pin 9	62 kHz
U205 pin 10	126 kHz
U205 pin 11	152.6 kHz
U205 pin 12	148.6 kHz

If one or more of the lines do not toggle, suspect the alternate channel data latch U303.

If none of the lines toggle, check the alternate channel clock output at A15 U601 pin 8. The clock should be 524 kHz. If not, suspect U601 or U303.

If all the lines into U205 are toggling at the proper rates, then suspect either U205 or U306.

8-31. MODE 11: Wideband Filter Calibration (A2)

A gain constant is generated for the PAR, Program and C-message filters on A2. The A17 test signal (ST17) is routed through the appropriate A2 filter (except for data segment 4), through the A4 wideband autorange, and then to the FWA detector. A reference measurement is made with no with no A2 filter to determine the absolute level variation. This reference value is subtracted from all filter measurements. The measured A2 filter constants are stored in non-volatile RAM on the A12 board.

Note

This mode is a calibration only mode and not intended for troubleshooting. Mode 12 provides more information if one of the filters fail. If mode 11 fails, mode 12 should also fail.

Here is a summary of the Mode 11 tests.

Data Segment	Test	Results Displayed	Path
1	1300 Hz, 0 dBm (600) PAR	0.0 +-1.0 dB	1
2	1004 Hz, 0 dBm (600) PRGM	0.0 +-1.0 dB	2
3	1004 Hz, 0 dBm (600) CMSG	0.0 +-1.0 dB	3
4	1004 Hz, 0 dBm (600)	0.0 +-1.0 db	4
5 thru 16	not used		

Here is a description of the Mode 11 paths.

Path 1 - A2 Input Mux Signal Path (Data Segment 1)

The PAR filter constant is tested. The gain in dB at 1300 Hz is measured and stored.

Check A2 TP1, TP2 and TP3 for a 1300 Hz sine wave, 2.2 volts p-p (.775 Vrms).

Path 2 - A2 Input Mux Signal Path (Data Segment 2)

The program filter constant is tested. The gain in dB at 1004 Hz is measured and stored.

Check A2 TP PRO and TP1 for a 1004 Hz sine wave, 2.2 volts p-p (.775 Vrms).

Path 3 - A2 Input Mux Signal Path (Data Segment 3)

The C-message filter constant is tested. The gain in dB at 1004 Hz is measured and stored.

Check A2 TP CMSG and TP1 for a 1004 Hz sine wave, 2.2 volts p-p (.775 Vrms).

Path 4 - A1 Wideband Channel Signal Path (Data Segment 4)

The offset from 0 dBm is measured through A1 to compensate for the noise to ground measurement. Normally this gain offset is matched by a loss in the active input, however noise to ground bypasses the active input. The last store gain offset on A1 is checked.

8-32. MODE 12: A2 Filter Sweeps (A2)

This mode does an abbreviated sweep of the A2 filters. The transmitter signal from A17 goes through the A2 multiplexer (U706) and through the selected filter. The signal goes through the A4 wideband autorange and then to the FWA detector on A5. All measurements are made relative to data segment 1.

Following is summary of the Mode 12 tests. All tests are done at a 0 dBm level and 600 ohm termination impedance.

Data Segment	Results Displayed	Test	Filter	Path
1	0.0 +-1.0 dB	1000 Hz	No filter	1
2	-3.0 +-1.8 dB	3000 Hz	3 kHz	2
3	-12.3 +-3.0 dB	6000 Hz	3 kHz	3
4	-3.0 +-1.8 dB	15.0 kHz	15 kHz	4
5	-12.3 +-3.0 dB	30.0 kHz	15 kHz	5
6	-1.1 +-1.0 dB	100 Hz	50 k-bit	6
7	0.0 +-1.0 dB	1000 Hz	50 k-bit	7
8	-8.3 +-2.0 dB	40.0 kHz	50 k-bit	8
9	-11.6 +-2.0 dB	300 Hz	Program	9
10	0.0 +-1.0 dB	1000 Hz	Program	10
11	7.2 +-2.0 dB	4000 Hz	Program	11
12	-16.3 +-2.0 dB	300 Hz	C-message	12
13	0.0 +-1.0 dB	1000 Hz	C-message	13
14	-15.0 +-2.0 dB	4000 Hz	C-message	14
15	-14.1 +-1.0 dB	800 Hz	P/AR	15
16	-3.0 +-1.0 dB	1526 Hz	P/AR	16

General Mode 12 Troubleshooting

Besides mode 11, this mode is the first mode to use A2 for measuring. If all the data segments fail, check A2 U405 and U706. It is possible for the A5 board to have a +-0.5 dB error at certain levels that previously had not been checked. If the output at A4 TP5 is correct, this could be the problem area.

For all modes, the transmit signal can be seen at A17 U408 pin 1. The measurement signal can be seen at A4 TP5. The signal input to A2 (A2 U706 pin 9) should be identical to the A17 output signal.

Here is a description of the Mode 12 paths.

Path 1

The gain at 1000 Hz with all amplifiers and filters switched out is measured. This segment provides a basic indication that the A2 board is functioning.

> Check A2 TP NWGT for a 1000 Hz sine wave, 2.2 volts p-p +-.27 volts (.775 Vrms).

Path 2

The gain at 1000 Hz is measured with the 3 kHz low pass filter switched in.

> Check A2 TP 3 kHz for a 1 kHz sine wave, 1.6 volts p-p +-.36 volts (.545 Vrms).

Path 3

The gain at 6 kHz is measured with the 3 kHz low pass filter switched in.

> Check A2 TP 3 kHz for a 6 kHz sine wave, 0.53 volts p-p +-.22 volts (.186 Vrms).

Path 4

The gain at 15 kHz is measured with the 15 kHz low pass filter switched in.

> Check A2 TP 15 kHz for a 15 kHz sine wave, 1.55 volts p-p +-.36 volts (.550 Vrms).

Path 5

The gain at 30 kHz is measured with the 15 kHz low pass filter switched in.

Check A2 TP 15 kHz for a 30 kHz sine wave, .53 volts p-p +-.22 volts (.188 Vrms).

Path 6

The gain at 100 Hz is measured with the 50 k-bit filter switched in.

Check the following points on A2 for a 100 Hz sine wave, 1.95 volts p-p (.676 Vrms). The tolerance at TP 50 k-bit is +-.24 volts p-p.

TP 50 k-bit, U400 pin 1, U400 pin 7, U401 pin 1

Path 7

The gain at 1 kHz is measured with the 50 k-bit filter switched in.

Check the following points on A2 for a 1 kHz sine wave, 2.2 volts p-p (.775 Vrms). The tolerance at TP 50 k-bit is +-.27 volts p-p.

TP 50 k-bit, U400 pin 1, U400 pin 7, U401 pin 1

Path 8

The gain at 140 kHz is measured with the 50 k-bit filter switched in.

Check the following points on A2 for a 140 kHz sine wave, 0.85 volts p-p (.313 Vrms). The tolerance at TP 50 k-bit is +-.22 volts p-p.

TP 50 k-bit, U400 pin 7, U401 pin 1

The level at U400 pin 1 is 2.2 volts p-p (.775 Vrms)

Path 9

The gain at 300 Hz is measured with the Program filter switched in.

Check the following points on A2 for a 300 Hz sine wave, 2.2 volts p-p (.776 Vrms).

U702 pin 1, U702 pin 14, U702 pin 8

The level at A2 TP PRO is 0.58 volts p-p +- .12 volts (.204 Vrms).

Path 10

The gain at 1 kHz is measured with the Program filter switched in.

Check the following points on A2 for a 1 kHz sine wave;

U702 pin 1 and A2 TP PRO should be 2.2 volts p-p (.775 Vrms) The tolerance at TP PRO is +-.27 volts p-p.

U702 pin 14 and pin 8 should be 2.25 volts p-p (.787 Vrms)

Path 11

The gain at 4 kHz is measured with the Program filter switched in.

Check the following points on A2 for a 4 kHz sine wave;

U702 pin 1 and A2 TP PRO should be 2.2 volts p-p (.775 Vrms). The tolerance at TP PRO is +-.27 volts p-p.

U702 pin 8 should be 2.9 volts p-p (1.0 Vrms)

U702 pin 14 should be 2.75 volts p-p (0.97 Vrms)

Path 12

The gain at 300 Hz is measured with the C-message filter switched in.

Check the following points on A2 for a 300 Hz sine wave;

TP CMSG should be .345 volts p-p +-.08 volts (0.12 Vrms)

U402 pin 1 should be 1.56 volts p-p (.543 Vrms)

U702 pin 14 should be 0.56 volts p-p (.195 Vrms)

U702 pin 8 should be 0.38 volts p-p (.132 Vrms)

Path 13

The gain at 1 kHz is measured with the C-message filter switched in.

Check the following points on A2 for a 1 kHz sine wave;

TP CMSG should be 2.22 volts p-p +-.27 volts (.783 Vrms)

U402 pin 1 should be 5.3 volts p-p (1.87 Vrms)

U402 pin 14 should be 7.25 volts p-p (2.53 Vrms)

U402 pin 8 should be 0.66 volts p-p (.240 Vrms)

Path 14

The gain at 4 kHz is measured with the C-message filter switched in.

Check the following points on A2 for a 4 kHz sine wave;

TP CMSG should be .395 volts p-p +-.10 volts (.137 Vrms)

U402 pin 1 should be 1.08 volts p-p (.383 Vrms)

U402 pin 14 should be 2.80 volts p-p (1.01 Vrms)

U402 pin 8 should be .019 volts p-p (.0065 Vrms)

Path 15

The gain at 800 Hz is measured with the P/AR filter switched in.

Check the following points on A2 for an 800 Hz sine wave;

TP P/AR should be 0.44 volts p-p +-.06 volts (.153 Vrms)

TP 2 should be 1.18 volts p-p (.344 Vrms)

Path 16

The gain at 1526 Hz is measured with the P/AR filter switched in.

Check the following points on A2 for a 1526 Hz sine wave;

TP P/AR should be 1.57 volts p-p +-.20 volts (.548 Vrms)

TP 2 should be 1.85 volts p-p (.652 Vrms)

8-33. MODE 13: A2 Filter Checks Continued (A2)

This mode continues the A2 filter checks. The signal is routed from A17 through A2. After passing through the selected filter, the signal goes through the wide-band autorange and then to the FWA detector on A5. For the phase jitter filter, the narrowband autorange path is used. All measurements are made relative to data segment 1.

Following is a summary of the Mode 13 tests. All tests are done with a 600 ohm termination impedance.

Data Segment	Results Displayed	Test	Filter	Path
1	0.0 +- 1.0 dB	1000 Hz	No filter	1
2	-55.0 /-99.0 dB	1010 Hz	Notch	2
3	-0.5 +- 1.0 dB	862 Hz	Notch	3
4	-0.5 +- 1.0 dB	1182 Hz	Notch	4
5	-2.7 +- 0.8 dB	10.0 kHz	10 kHz	5
6	-12.2 +- 1.0 dB	20.0 kHz	10 kHz	6
7	-21.0 +- 1.0 dB	60 Hz	60 Hz	7
8	0.0 +- 0.5 dB	400 Hz	60 Hz	8
9	0.0 +- 0.5 dB	1000 Hz	10 dB	9
10	-2.0 +- 0.5 dB	400 Hz	Phase Jitter	10
11	0.0 +- 0.5 dB	1000 Hz	Phase Jitter	11
12	-1.0 +- 0.5 dB	1450 Hz	Phase Jitter	12
13	-3.0 +- 0.5 dB	700 Hz	Transient	13
14	0.0 +- 0.5 dB	1000 Hz	Transient	14
15	-3.0 +- 0.5 dB	1300 Hz	Transient	15
16	not used			

General Mode 13 Troubleshooting

During the phase jitter filter segments, the narrowband channel is being used for the first time (not including calibration Mode 11).

Slow switching speeds and dc offsets of the analog switches can cause problems for any segment, but primarily the 10 dB amplifier.

The IMDI signal from A2 is buffered on A4 before going to the transient filter which is physically located on A4.

Following is a derscription of the Mode 13 paths.

Path 1

The gain at 1000 Hz is measured with all amplifiers and filters switched out is measured through the wideband autorange using the FWA wideband detector to establish a reference.

Check A2 TP NWGT for a 1000 Hz sine wave, 2.2 volts p-p +-.27 volts (.775 Vrms).

Path 2

The gain at 1010 Hz is measured with the 1010 Hz notch filter and the C-message filter switched in. The C-message filter is in to increase the measurement accuracy.

Check A2 TP NTCH3 for a 1010 Hz sine wave, .0048 volts p-p (.0017 Vrms). This value is calculated, too small to see on scope.

Check A2 TP NTCH2 for a 1010 Hz sine wave, .0051 volts p-p (.0018 Vrms). This value is calculated, too small to see on scope.

Check A2 TP NTCH1 for a 1010 Hz sine wave, 0.20 volts p-p (.068 Vrms).

Path 3

The gain at 862 Hz is measured with the 1010 Hz notch filter and the C-message filter switched in. The C-message filter is in to increase the measurement accuracy.

Check A2 TP NTCH3 for a 862 Hz sine wave, 2.0 volts p-p (.7.5 Vrms).

Check A2 TP NTCH2 for a 862 Hz sine wave, 3.25 volts p-p (1.10 Vrms).

Check A2 TP NTCH1 for a 862 Hz sine wave, 5.5 volts p-p (1.93 Vrms).

Path 4

The gain at 1182 Hz is measured with the 1010 Hz notch filter and the C-message filter switched in. The C-message filter is in to increase the measurement accuracy.

Check A2 TP NTCH3 for a 1182 Hz sine wave, 2.0 volts p-p (.707 Vrms).

Check A2 TP NTCH2 for a 1182 Hz sine wave, 0.62 volts p-p (.217 Vrms).

Check A2 TP NTCH1 for a 1182 Hz sine wave, 1.09 volts p-p (.383 Vrms).

Path 5

The gain at 10 kHz is measured with the 10 kHz low pass filter switched in.

Check A2 TP NWGT for a 10 kHz sine wave, 1.6 volts p-p +-.15 volts (.560 Vrms).

Path 6

The gain at 20 kHz is measured with the 10 kHz low pass filter switched in.

Check A2 TP NWGT for a 20 kHz sine wave, 0.53 volts p-p +-.06 volts (.188 Vrms).

Check A2 U706 pin 3 for a 20 kHz sine wave, 2.2 volts p-p (.775 Vrms).

Path 7

The gain at 60 Hz is measured with the 60 Hz high pass filter switched in.

Check A2 U707 pin 7 for a 60 Hz sine wave, .195 volts p-p (.067 Vrms).

Check A2 U707 pin 14 for a 60 Hz sine wave, 0.92 volts p-p (.324 Vrms).

Path 8

The gain at 400 Hz is measured with the 60 Hz high pass filter switched in.

Check A2 U707 pin 7 for a 400 Hz sine wave, 2.1 volts p-p (.735 Vrms).

Check A2 U707 pin 14 for a 400 Hz sine wave, 2.1 volts p-p (.735 Vrms).

Path 9

The gain at 1000 Hz is measured with the 10 dB amplifier switched in and the transmit signal attenuated to -10 dBm. Note that the 10 dB amplifier is bandlimited with a 3 dB point at 278 Hz.

Check A2 TP NWGT for a 1000 Hz sine wave, 2.2 volts p-p +-.27 volts (.775 Vrms).

Path 10

The gain at 400 Hz is measured with the phase jitter band pass filter switched in. The narrowband autorange is used but the detector is still the FWA wideband.

Check the following points for a 400 Hz sine wave.

Check A2 U701 pin 7 for 1.75 volts p-p (.613 Vrms).

Check A2 U701 pin 14 for 3.7 volts p-p (1.29 Vrms).

Check A2 U700 pin 7 for 3.2 volts p-p (1.12 Vrms).

Check A2 U700 pin 1 for 2.1 volts p-p (.735 Vrms).

Path 11

The gain at 1000 Hz is measured with the phase jitter band pass filter switched in. The narrowband autorange is used but the detector is still the FWA wideband.

Check the following points for a 1000 Hz sine wave.

Check A2 U701 pin 7 for 2.2 volts p-p (.775 Vrms).

Check A2 U701 pin 14 for 1.22 volts p-p (.43 Vrms).

Check A2 U700 pin 7 for 1.14 volts p-p (0.40 Vrms).

Check A2 U700 pin 1 for 1.35 volts p-p (0.48 Vrms).

Path 12

The gain at 1450 Hz is measured with the phase jitter band pass filter switched in. The narrowband autorange is used but the detector is still the FWA wideband.

Check the following points for a 1450 Hz sine wave.

Check A2 U701 pin 7 for 1.95 volts p-p (0.68 Vrms).

Check A2 U701 pin 14 for 0.52 volts p-p (0.18 Vrms).

Check A2 U700 pin 7 for 0.5 volts p-p (.175 Vrms).

Check A2 U700 pin 1 for 0.85 volts p-p (.295 Vrms).

Path 13

The gain at 700 Hz is measured with the transient bandpass filter switched in.

Check A4 U901 pin 8 for a 700 Hz sine wave, 1.55 volts p-p (.545 Vrms).

Check A4 U901 pin 1 for a 700 Hz sine wave, 2.9 volts p-p (1.0 Vrms).

Path 14

The gain at 1000 Hz is measured with the transient bandpass filter switched in.

Check A4 U901 pin 8 for a 1000 Hz sine wave, 2.2 volts p-p (.775 Vrms).

Check A4 U901 pin 1 for a 1000 Hz sine wave, 3.45 volts p-p (1.2 Vrms).

Path 15

The gain at 1300 Hz is measured with the transient bandpass filter switched in.

Check A4 U901 pin 8 for a 1300 Hz sine wave, 1.05 volts p-p (.54 Vrms).

Check A4 U901 pin 1 for a 700 Hz sine wave, 2.8 volts p-p (0.98 Vrms).

8-34. MODE 14: A1 and A18 Check

This mode tests the amplifier, attenuators, input stage and terminations on A1,the return loss transformer on A18, and the RTL bridge on A18. Segments 1,2, and 3 use the A17 test signal as the signal source. The other segments use the two-wire return loss path from the transmitter. The signal is then routed through A2 (no filters), A4 (wideband autorange) and A5 (FWA wideband detector). Since the transmit signal from the return loss bridge has not been tested, the termination test is also an A18 output check. This signal is routed from A18 to A1 without going through the active output, therefore the active output stage on A18 requires separate testing.

Here is a summary of the Mode 14 tests.

All tests use a 1000 Hz transmit frequency.

Data Segment	Results Displayed	Test	Path
1	0.0 +-1.0 dB	0.0 dBm (600) 0 Atten	1
2	0.0 +-1.0 dB	-20 dBm (600) 20dB Amp	2
3	-20.0 +-1.0 dB	0.0 dBm (600) 20 Atten	3
4	-15.7 +-1.0 dB	0.0 dBm (600) 135 Ohm	4
5	-11.3 +-1.0 dB	0.0 dBm (600) 600 Ohm	5
6	-10.7 +-1.0 dB	0.0 dBm (600) 900 Ohm	6
7	-10.4 +-1.0 dB	0.0 dBm (600) 1200 Ohm	7
8	-0.2 +-1.0 dB	0.0 dBm (600) Bridge	8
9	-12.4 +-1.0 dB	0.0 dBm (600) 900 Ref	9

10 thru 16 not used

General Troubleshooting For Segments 4 thru 9.

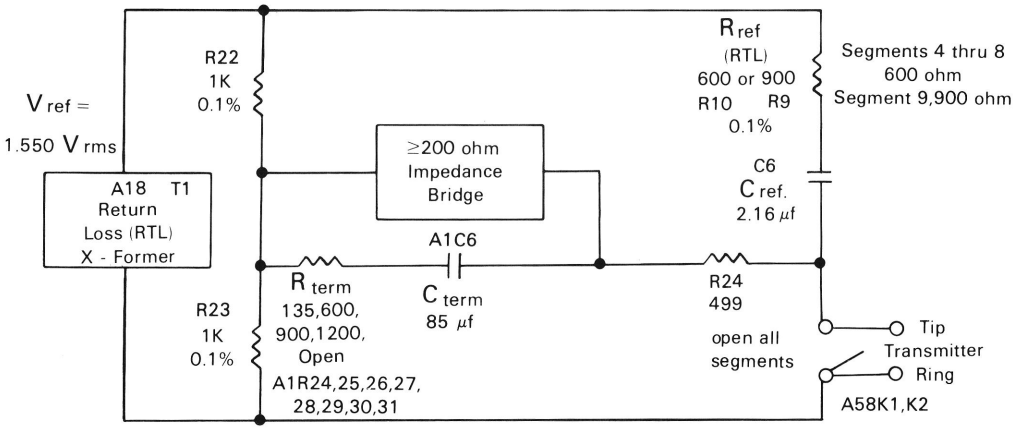

General Mode 14 Troubleshooting

This mode uses previously untested hardware extensively. A lot of probing may be required to isolate a problem.

If paths 4 through 9 fail by less than 1 dB, suspect any of the following:

Transmit level error

Receiver level measurement accuracy

Termination tolerance

20 dB preamp misadjustment

Bridging loss

If a few of the paths are off severely, suspect a relay fault (terminations do not switch), mismatch of the 5 k resistors or the 499 ohm resistor out of tolerance.

If paths 4 through 9 all fail, suspect a fault in the active input or output. One cause is the loss of the 100 volt supplies. Here are the points to check and the expected levels. In all cases a 1000 Hz sine wave is used. The levels are for segment 8.

Check A1 TP2 for 2.1 volts p-p (.730 Vrms).

Check A1 U302 pin 3 and U402 pin 3 for 1.08 volts p-p (.365 Vrms).

Check the base of A1 Q8 and Q9 for 0.34 volts p-p (0.12 Vrms).

Check A1 C6 for 1.7 volts p-p (0.6 Vrms).

Check A1 K606 pin 4 for 0.35 volts p-p (0.12 Vrms).

Check A1 K606 pin 13 for 1.7 volts p-p (0.6 Vrms).

Check A18 TP 7 for 0.35 volts p-p (0.12 Vrms).

Check A18 TP 8 for 1.7 volts p-p (0.6 Vrms).

Check A17 P1 pin 1 for 2.45 volts p-p (.855 Vrms).

Check A17 P1 pin 2 for 1.75 volts p-p (.615 Vrms).

If paths 4, 5, 6, 7 and 9 fail, suspect the A18 return loss bridge, A18T1, the A17 signal source, and the A18 relays.

Following is a description of the Mode 14 paths.

Path 1

The 0 dB configuration on A1 is tested. The signal goes through the 20 dB attenuator and then through the 20 dB adjustable amplifier.

Check the following points for a 1000 Hz sine wave.

Check A1 TP3 for 2.4 volts p-p (0.84 Vrms).

Check A1 TP4 for 2.3 volts p-p (0.81 Vrms).

Path 2

The transmitter signal is attenuated -20 dBm from path 1 and the A1 attenuator is set to 0 dB. The 20 dB amplifier on A1 is switched in to raise the measured level to 0 dBm. This measurement is made relative to path 1.

Check A1 TP3 for a 1000 Hz sine wave, 2.4 volts p-p (0.84 Vrms).

Path 3

The transmitter signal is 0 dBm, the A1 40 dB attenuator is switched in on A1 along with the 20 dB amplifier. The signal to A2 is attenuated by -20 dBm. This measurement is made relative to path 1.

Check A1 TP3 for a 1000 Hz sine wave, 0.24 volts p-p (.084 Vrms).

Path 4

The return loss bridge output is connected to the receiver as per the two-wire return loss measurement. This is the balanced output of the transmitter which is connected accross the 135 ohm receiver termination, through the bridge with the transmitter tip and ring open. The input receiver level is measured with respect to 135 ohms.

Check A1 TP3 for a 1000 Hz sine wave, .057 volts p-p (.019 Vrms).

Path 5

This path is identical to Path 4 except the receiver is terminated with 600 ohms. Check the termination value and the switching relays if this segment fails.

Check A1 TP3 for a 1000 Hz sine wave, 0.23 volts p-p (.077 Vrms).

Path 6

This path is identical to Path 4 except the receiver is terminated with 900 ohms. Check the termination value and the switching relays if this segment fails.

Check A1 TP3 for a 1000 Hz sine wave, .315 volts p-p (.110 Vrms).

Path 7

This path is identical to Path 4 except the receiver is terminated with 1200 ohms. Check the termination value and the switching relays if this segment fails.

Check A1 TP3 for a 1000 Hz sine wave, 0.40 volts p-p (.140 Vrms).

Path 8

This path is identical to Path 4 except the receiver input is bridged. The bridging impedance is assumed to be 200 k-ohms. That is why the nominal value for this path is -0.2 dBm instead of 0.0 dBm.

Check A1 TP3 for a 1000 Hz sine wave, 2.15 volts p-p (.755 Vrms)

Path 9

The return loss bridge output is terminated with 600 ohms at the receiver and the tip and ring of the transmitter are opened. This allows the level measurement to be influenced by the 900 REF resistor. Check the reference resistor and capacitor if this path fails.

Check A1 TP3 for a 1000 Hz sine wave, 0.20 volts p-p (0.07 Vrms).

8-35. MODE 15: IMD Hardware Check (A3)

This mode tests the A3 circuits. The signal is routed from A17 through A2 (with no A2 filters in) and through A3 where the signal can be picked off from the mixer input or after the 520 Hz bandpass filter. The A4 wideband autorange is used and the signal is detected with the A5 FWA wideband detector. Frequency is measured on A8.

Following is a summary of the Mode 15 tests.

Data Segment	Results Displayed	Test	Filter	Path
1	-25 / -90 dB	1380 Hz, 0 dBm(600)	Notch	1
2	-25 / -90 dB	860 Hz, 0 dBm(600)	Notch	2
3	-30 / -90 dB	2940 Hz, 0 dBm(600)	Notch	3
4	-30 / -90 dB	3280 Hz, 0 dBm(600)	Notch	4
5	5.0 +-2.0 dB	490 Hz, 0 dBm(600)	BPF	5
6	5.4 +-2.0 dB	520 Hz, 0 dBm(600)	BPF	6
7	4.9 +-2.0 dB	550 Hz, 0 dBm(600)	BPF	7
8	5.4 +-2.0 dB	520 Hz, -30 dBm(600)	Mixer	8
9	1.7 +-2.0 dB	1900 Hz, 0 dBm(600)	Mixer	9
10	520 +-5 Hz	1900 Hz, 0 dBm(600)	Mixer	9
11	3.1 +-2.0 dB	2240 Hz, 0 dBm(600)	Mixer	10
12	520 +-5 Hz	2240 Hz, 0 dBm(600)	Mixer	10
13	see Note	No detect/detect at 1380 Hz		1
14	see Note	No detect/detect at 860 Hz		2
15, 16	not used			

Note: For data segments 13 and 14:

0 = no tones detected
1 = 1380 Hz tone detected
2 = 860 Hz tone detected
3 = both tones detected

General Mode 15 Troubleshooting

If the 30 dB amplifier can not be switched out, the first two notch checks will be way off while the rest of the level measurements will not be drastically affected.

Small errors in the bandpass filter checks could indicate filter misadjustment or clipping in one of the filter sections (anti-aliasing or BPF sections).

Following is a description of the Mode 15 paths.

Path 1, 1380 Hz Notch and Tone Detect (Data Segments 1 and 13)

A 1380 Hz signal from A17 is sent to A3. The mixer input signal is sent to the detector for measurement to determine the depth of the notch. The tone detect latch is read to check its operation. Notice that the notch depth level readings for paths 1, 2 and 3 are 5 to 6 dB higher than the actual depths due to the gain in one of the anti-aliasing filter sections.

Check the following points for a 1380 Hz sine wave.

Check A3 P1 pin 39 for 2.2 volts p-p (.775 Vrms).

Check A3 U505 pin 8 for .028 volts p-p (.008 Vrms).

Check A3 U405 pin 1 for .041 volts p-p (.014 Vrms).

Check A4 TP5 for 1.25 volts p-p (.433 Vrms).

Check A3 U700 pin 2 for a high TTL level (+5 volts) indicating a detected tone. A low (0 volts) indicates no tone tetect.

Path 2, 860 Hz Notch and Tone Detect (Data Segments 2 and 14)

An 860 Hz signal from A17 is sent to A3. The mixer input signal is sent to the detector for measurement to determine the depth of the notch. The tone detect latch is read to check its operation. Notice that the notch depth level readings for paths 1, 2 and 3 are 5 to 6 dB higher than the actual depths due to the gain in one of the anti-aliasing filter sections.

Check the following points for an 860 Hz sine wave.

Check A3 U504 pin 1 for .042 volts p-p (.015 Vrms).

Check A3 U405 pin 1 for .055 volts p-p (.016 Vrms).

Check A3 U700 pin 4 for a high TTL level (+5 volts) indicating a detected tone. A low (0 volts) indicates no tone detect.

Path 3, 2940 Hz Notch (Data Segment 3)

An 2940 Hz signal from A17 is sent to A3. The mixer input signal is sent to the detector for measurement to determine the depth of the notch. Notice that the notch depth level readings for paths 1, 2 and 3 are 5 to 6 dB higher than the actual depths due to the gain in one of the anti-aliasing filter sections.

Check the following points for a 2940 Hz sine wave.

Check A3 U408 pin 14 for .009 volts p-p (.004 Vrms).

Check A3 U306 pin 7 for .012 volts p-p (.007 Vrms).

Check A3 U306 pin 8 for .0085 volts p-p (calculated, can't see on scope), .003 Vrms.

Path 4, 3280 Hz Notch (Data Segment 4)

An 3280 Hz signal from A17 is sent to A3. The mixer input signal is sent to the detector for measurement to determine the depth of the notch.

Check the following points for a 3280 Hz sine wave.

Check A3 U408 pin 14 for .095 volts p-p (.033 Vrms).

Check A3 U306 pin 7 for .195 volts p-p (.070 Vrms).

Check A3 U306 pin 8 for .039 volts p-p (.013 Vrms.

Path 5 (Data Segment 5)

A 490 Hz signal is used to check the frequency response of the 520 Hz band-pass filter. The mixer is used for the first time with a mixing frequency of 0 Hz to produce only the input frequency.

Check the following points for a 490 Hz sine wave.

Check A3 TP3 for 12.4 volts p-p (4.3 Vrms).

Check A3 TP4 for 12.2 volts p-p (4.17 Vrms).

Check A3 TP5 for 10.2 volts p-p (3.55 Vrms).

Check A3 TP6 for 4.1 volts p-p (1.4 Vrms).

Path 6 (Data Segment 6)

A 520 Hz signal is used to check the frequency response of the 520 Hz band-pass filter. The mixer is used for the first time with a mixing frequency of 0 Hz to produce only the input frequency.

Check the following points for a 520 Hz sine wave.

Check A3 TP3 for 18 volts p-p (6.25 Vrms).

Check A3 TP4 for 15.8 volts p-p (5.6 Vrms).

Check A3 TP5 for 18 volts p-p (6.25 Vrms).

Check A3 TP6 for 4.3 volts p-p (1.5 Vrms).

Path 7 (Data Segment 7)

A 550 Hz signal is used to check the frequency response of the 520 Hz band-pass filter. The mixer is used for the first time with a mixing frequency of 0 Hz to produce only the input frequency.

Check the following points for a 550 Hz sine wave.

Check A3 TP3 for 27 volts p-p (9.5 Vrms).

Check A3 TP4 for 18 volts p-p (6.25 Vrms).

Check A3 TP5 for 26 volts p-p (9 Vrms).

Check A3 TP6 for 4.1 volts p-p (1.4 Vrms).

Path 8 (Data Segment 8)

A 520 Hz signal is attenuated by 30 dB. The 30 dB amplifier is switched into the path and the output is taken from the 520 Hz bandpass filter.

Check A3 U505 pin 8 for a 520 Hz sine wave, .08 volts p-p (.025 Vrms).

Check A3 U608 pin 6 for a 520 Hz sine wave, 2.4 volts p-p (.815 Vrms).

Path 9 (Data Segments 9 and 10)

The transmitter transmits at 520 Hz. The mixing frequency is set to 2420 Hz and the 1900 Hz difference frequency is applied to the 1900 Hz bandpass filter. The level and frequency are measured. Because of the mixing, the measured frequency is 520 Hz. If paths 5, 6 and 7 pass, a failure in this segment indicates trouble with the mixer or trouble with mixer frequency generation.

Check A3 U405 pin 1 for a 1900 Hz sine wave, 4.5 volts p-p (1.55 Vrms). Expect some phase jitter.

Check A3 U404 pin 15 for a 2420 Hz square wave (+5 volt).

Check A3 U204 pin 1 for a 520 Hz chopped sine wave (See Figure Mode 15 - 1).

Check A4 TP5 for a 520 Hz sine wave, 2.8 volts p-p (0.97 Vrms).

Path 10 (Data Segments 11 and 12)

The transmitter transmits at 520 Hz. The mixing frequency is set to 2760 Hz and the 2240 Hz difference frequency is applied to the 2240 Hz bandpass filter. The level and frequency are measured. Because of the mixing, the measured frequency is 520 Hz.

Check A3 U405 pin 1 for a 2240 Hz sine wave, 5.1 volts p-p (1.8 Vrms). Expect some phase jitter.

Check A3 U404 pin 15 for a 2760 Hz square wave (+5 volt).

Check A3 U204 pin 1 for a 520 Hz chopped sine wave (See Figure Mode 15 - 1).

Check A4 TP5 for a 520 Hz sine wave, 3.25 volts p-p (1.1 Vrms).

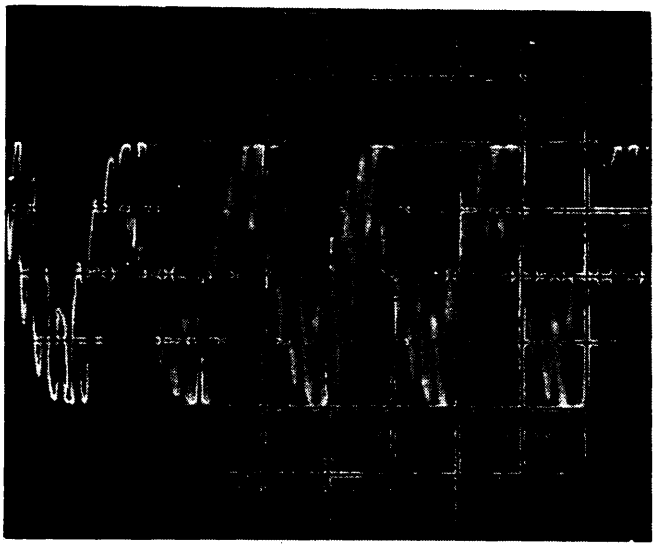

Vert: 1 V/div
Horiz: depends on frequency

Figure Mode 15-1

Figure 8-10. Mode 15 Waveforms

8-36. MODE 16: IMD Filter Calibration (A3)

This mode tests the gain constant of the three bandpass filters used in IMD, and the noise floor of each filter. There is actually only one bandpass filter which is preceeded by the A3 mixer. The mixer can generate a 520 Hz component from a 1990 or 2240 Hz signal. The resultant 520 Hz component has an amplitude proportional to the 1900 or 2240 Hz signal (depending on the mixing signal). Thus, there are three different gain constants for the same filter. Because of the different passband frequencies, the noise floors of each filter are not equal.

For Data Segments 1 - 3:

The transmit signal is sent from A17 to the A2 input multiplexer, through A2 on the IMDI line to A3. The signal level is measured with the wideband autorange and the rms detector. All level measurements are made relative to the level measured when the appropriate frequency tone is sent from A2 directly to the wideband autorange (bypassing A3).

For Data Segments 4 - 6:

The 4 tone IMD signal at 40 dBm is routed through the return loss bridge into the receiver. The signal then follows the usual IMD measurement path to the wideband autorange and RMS detector. The result displayed is the negative value of the noise plus one (for example, 114 displayed is - 115 dB 600).

Here is a summary of the Mode 16 tests.

Data Segment	Results Displayed	Test	Filter	Path
1	5.4 +—1.0 dB	520 Hz, 0.0 dBm(600)	520 Hz BPF	1
2	1.7 +—1.0 dB	1900 Hz, 0.0 dBm(600)	1900 Hz BPF	2
3	3.1 +—1.0 dB	2240 Hz, 0.0 dBm(600)	2240 Hz BPF	3
4	113.5 +—13.5 dB	IMD , -40 dBm (600)	520 Hz noise	4
5	113.5 +—13.5 dB	IMD , -40 dBm (600)	1400 Hz noise	4
6	113.5 +—13.5 dB	IMD , -40 dBm (600)	2240 Hz noise	4
7 thru 16	not used			

Here is a description of the Mode 16 paths.

Path 1

The level of the reference 520 Hz signal is subtracted from the level of the 520 Hz signal passed through the 520 Hz bandpass filter on A3 with the mixer frequency set to 0 Hz.

Check A4 TP5 for a 520 Hz sine wave, 4.3 volts p-p (1.1 Vrms).

Path 2

The level of the reference 1900 Hz signal is subtracted from the level of the 1900 Hz signal passed through the 520 Hz bandpass filter on A3 with the mixer frequency set to 2420 Hz.

Check A4 TP5 for a 520 Hz sine wave, 2.8 volts p-p (.97 Vrms).

Path 3

The level of the reference 2240 Hz signal is subtracted from the level of the 2240 Hz signal passed through the 520 Hz bandpass filter on A3 with the mixer frequency set to 2760 Hz.

Check A4 TP5 for a 520 Hz sine wave, 3.2 volts p-p (1.1 Vrms).

8-37. MODE 17: Jitter Digital and Phase Lock Loop Check (A6)

This mode checks the communication path on A6 (read/write test). The A6 A to D converter is also checked. The phase lock loop, lock time is measured and the capture range of the phase jitter phase lock loop is checked.

Following is a summary of the mode 17 tests.

Data Segment	Test	Results Displayed	Path
1	Read/Write Test	1=PASS,0=FAIL	1
2	not used		
3	Read A Ground	128 +-10	1
4	Read D Ground	128 +-10	1
5	Read V REF	255 +0,-10	1
6	not used		
7	20Hz PLL Lock	0 +10,-0	2
8	4Hz PLL Lock	0 +10,-0	2
9	not used		
10	not used		
11	not used		
12	20Hz PLL Lock	0 +10,-0	3
13	4Hz PLL Lock	0 +10,-0	3
14	not used		
15	20Hz PLL Lock	0 +10,-0	4
16	4Hz PLL Lock	0 +10,-0	4

Following is a description of the mode 17 paths.

Path 1 (Data Segment 1)

A read/write test is performed on A6, giving a pass (1) or fail (0) indication. Every possible 8-bit combination is written to the input latch U700, then read back through output latch U600, and then checked for accuracy.

If this segment fails, try the Receiver Signature Analysis loop and check A6 U400, U500, U600 and U700.

Path 1 (Data Segment 3)

The analog ground on A6 is selected on U302 pin 5 and is read by the A to D converter U402. This test checks the ground as well as the A to D converter. The test returns 128 +-10 which translates to 0.0 volts +- .40 volts.

Check TP1 for waveform "Mode 17 - 1" when path 1 is being run repetitively.

If this segment fails, suspect the analog ground signal at U302 pin 5.

If segments 3, 4 and 5 fail, check U302, U402 and U502.

Path 1 (Data Segment 4)

The digital ground on A6 is selected on U302 pin 6 and is read by the A to D converter U402. This test checks the ground as well as the A to D converter. The test returns 128 +-10 which translates to 0.0 volts +- .40 volts.

Check TP1 for waveform "Mode 17 - 1" when path 1 is being run repetitively.

If this segment fails, suspect the digital ground signal at U302 pin 6.

If segments 3, 4 and 5 fail, check U302, U402 and U502.

Path 1 (Data Segment 5)

The +5 volt reference on A6 is selected on U302 pin 7 and is read by the A to D converter U402. This test checks the reference as well as the A to D converter. The test returns 255 +0/-10 which translates to +5.0 volts for 255 and +4.6 volts for 245.

Check TP1 for waveform "Mode 17 - 1" when path 1 is being run repetitively.

If this segment fails, suspect the +5 volt reference signal at U302 pin 7. If it is not +5 volts, check the voltage reference U300 and U200.

If segments 3, 4 and 5 fail, check U302, U402 and U502.

Path 2 checks the 20 Hz and 4 Hz phase lock loops at 1004 Hz.

Path 2 (Data Segment 7)

At the start of this test, the A1 input multiplexer is shorted to ground for one second. The transmitter is set to a 1004 Hz single tone. The input multiplexer is switched to the transmitter signal and after one second, the 20 Hz phase lock loop is checked for lock. 0 (0.00 volts) should be displayed. The maximum number displayed is 10 which indicates +0.40 volts. The loop is locked if the reading is less than 10.

Note: This path switches between segments 7 and 8 at a 5 second rate. Where two signal levels are given, they switch at this 5 second rate.

First check the input signal at TP PJIN for a 1004 Hz sine wave at 2.2 volts peak-to-peak and 3.8 volts peak-to-peak symmetrical about ground.

Check the output of the sine-to-square wave converter at TP SWI. There should be a 1004 Hz, 0 to 5 volt square wave.

Check TP L20 for loop lock, indicated by a stable dc voltage of approximately +2.9 volts appearing less than one second after the 1004 Hz sine wave is applied.

If the loop is not locking, it may be easier to use Mode 18 path 4 where the signal is constant and not changing as it is here.

Path 2 (Data Segment 8)

This data segment is a continuation of path 2 after data segment 7 is completed.

Wait one second and check the 4 Hz phase lock loop lock. 0 (0.00 volts) should be displayed. The maximum number displayed is 10 which indicates +0.40 volts. The loop is locked if the reading is less than 10.

Note: this path switches between segments 7 and 8 at a 5 second rate. Where two signal levels are given, they switch at this 5 second rate.

First check the input signal at TP PJIN for a 1004 Hz sine wave at 2.2 volts peak-to-peak and 3.8 volts peak-to-peak symmetrical about ground.

Check the output of the sine-to-square wave converter at TP SWI. There should be a 1004 Hz, 0 to 5 volt square wave.

Check TP L4 for loop lock, indicated by a stable dc voltage of < +0.3 volts appearing less than two seconds after the 1004 Hz sine wave is applied

Check the out-of-lock detection circuit at U205 pin 1. This point should be at +15 volts for one second (unlocked) and then at -15 volts for 13 seconds (locked).

If the loop is not locking, it may be easier to use Mode 18 path 4 where the signal is constant and not changing as it is here.

Path 3 checks both the 20 Hz and 4 Hz phase lock loops at 990 Hz.

Path 3 (Data Segment 12)

At the start of this test, the A1 input multiplexer is shorted to ground for one second. The transmitter is set to a 990 Hz single tone. The input multiplexer is switched to the transmitter signal and after one second, the 20 Hz phase lock loop is checked for lock. 0 (0.00 volts) should be displayed. The maximum number displayed is 10 which indicates +0.40 volts. The loop is locked if the reading is less than 10.

Note: This path switches between segments 12 and 13 at a 5 second rate. Where two signal levels are given, they switch at this 5 second rate.

First check the input signal at TP PJIN for a 990 Hz sine wave at 2.2 volts peak-to-peak and 3.8 volts peak-to-peak symmetrical about ground.

Check the output of the sine-to-square wave converter at TP SWI. There should be a 990 Hz, 0 to 5 volt square wave.

Check TP L4 for loop lock, indicated by a stable dc voltage of approximately +2.9 volts appearing less than one second after the 990 Hz sine wave is applied.

If the loop is not locking, it may be easier to use Mode 18 path 4 where the signal is constant and not changing as it is here.

Path 3 (Data Segment 13)

This data segment is a continuation of path 3 after data segment 12 is completed.

Wait one second and check the 4 Hz phase lock loop lock. 0 (0.00 volts) should be displayed. The maximum number displayed is 10 which indicates +0.40 volts. The loop is locked if the reading is less than 10.

Note: This path switches between segments 12 and 13 at a 5 second rate. Where two signal levels are given, they switch at this 5 second rate.

First check the input signal at TP PJIN for a 990 Hz sine wave at 2.2 volts peak-to-peak and 3.8 volts peak-to-peak symmetrical about ground.

Check the output of the sine-to-square wave converter at TP SWI. There should be a 990 Hz, 0 to 5 volt square wave.

Check TP L4 for loop lock, indicated by a stable dc voltage of +1.1 volts appearing less than two seconds after the 990 Hz sine wave is applied.

Check the out-of-lock detection circuit at U205 pin 1. This point should be at +15 volts for one second (unlocked) and then at -15 volts for 13 seconds (locked).

If the loop is not locking, it may be easier to use Mode 18 path 4 where the signal is constant and not changing as it is here.

Path 4 checks both the 20 Hz and 4 Hz phase lock loops at 1303 Hz.

Path 4 (Data Segment 15)

At the start of this test, the A1 input multiplexer is shorted to ground for one second. The transmitter is set to a 1030 Hz single tone. The input multiplexer is switched to the transmitter signal and after one second, the 20 Hz phase lock loop is checked for lock. 0 (0.00 volts) should be displayed. The maximum number displayed is 10 which indicates +0.40 volts. The loop is locked if the reading is less than 10.

Note: This path switches between segments 15 and 16 at a 5 second rate. Where two signal levels are given, they switch at this 5 second rate.

First check the input signal at TP PJIN for a 1030 Hz sine wave at 2.2 volts peak-to-peak and 3.8 volts peak-to-peak symmetrical about ground.

Check the output of the sine-to-square wave converter at TP SWI. There should be a 1030 Hz, 0 to 5 volt square wave.

Check TP L20 for loop lock, indicated by a stable dc voltage of approximately +2.9 volts appearing less than one second after the 1030 Hz sine wave is applied.

If the loop is not locking, it may be easier to use Mode 18 path 4 where the signal is constant and not changing as it is here.

Path 4 (Data Segment 16)

This data segment is a continuation of path 4 after data segment 15 is completed.

Wait one second and check the 4 Hz phase lock loop lock. 0 (0.00 volts) should be displayed. The maximum number displayed is 10 which indicates +0.40 volts. The loop is locked if the reading is less than 10.

Note: This path switches between segments 15 and 16 at a 5 second rate. Where two signal levels are given, they switch at this 5 second rate.

First check the input signal at TP PJIN for a 1030 Hz sine wave at 2.2 volts peak-to-peak and 3.8 volts peak-to-peak symmetrical about ground.

Check the output of the sine-to-square wave converter at TP SWI. There should be a 1030 Hz, 0 to 5 volt square wave.

Check TP L4 for loop lock, indicated by a stable dc voltage of - 1.5 volts appearing less than two seconds after the 1030 Hz sine wave is applied.

Check the out-of-lock detection circuit at U205 pin 1. This point should be at +15 volts for one second (unlocked) and then at -15 volts for 13 seconds (locked).

If the loop is not locking, it may be easier to use Mode 18 path 2 where the signal is constant and not changing as it is here.

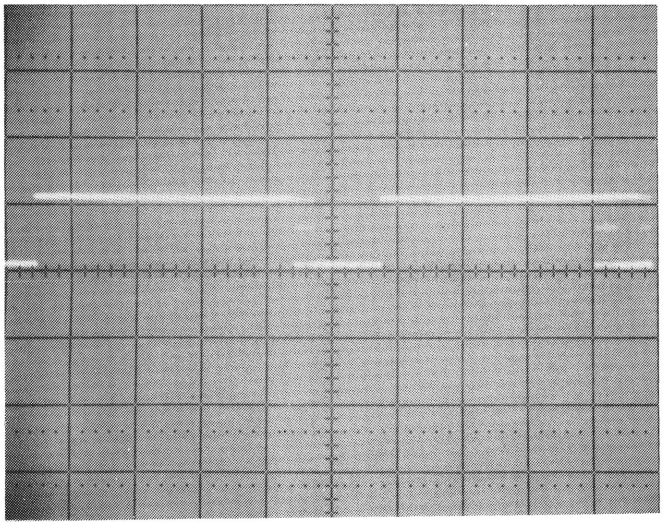

Vert: 5 V/div
Horiz: 20 msec/div

Mode 17 - 1

Figure 8-11. Mode 17 Waveforms

8-38. MODE 18: Jitter Calibration (A6)

This mode calibrates the jitter circuits with signals from the transmitter and then checks the resulting calibration constants to within reasonable limits. This test is a functional test as opposed to a performance test.

Following is a summary of the Mode 18 tests.

Data Segment	Test	Results Displayed	Path
1	AJ OFFSET 4-300HZ	0 +10,-0	1
2	PJ OFFSET 4-300HZ	0 +10,-0	2
3	AJ OFFSET 20-300HZ	0 +10,-0	3
4	PJ OFFSET 20-300HZ	0 +10,-0	4
5	AJ OFFSET 4-20HZ	0 +10,-0	5
6	PJ OFFSET 4-20HZ	0 +10,-0	6
7	AJ GAIN 4-300HZ	11000 +-2000	7
8	PJ GAIN 4-300HZ	11000 +-2000	8
9	AJ GAIN 20-300HZ	11000 +-2000	9
10	PJ GAIN 20-300HZ	11000 +-2000	10
11	AJ GAIN 4-20HZ	11000 +-2000	11
12	PJ GAIN 4-20HZ	11000 +-2000	12

13 thru 16 not used

Diagnostics - Mode 18

Following is a description of the Mode 18 paths.

Path 1

The transmitter is set to 1004 Hz single tone. Offset is measured for amplitude jitter in the 4 to 300 Hz band.

First check for the proper input signal at TP AJIN. This signal should be a +1.1 or +1.9 volt, full wave rectified signal, at 2008 Hz, switching between the two voltage levels at a 5 second rate.

Check the output of the 4 Hz high pass filter, U504 pin 1. Look for a +1.1 volt or a +1.9 volt, full wave rectified signal with -0.3 volt offset, switching between the two voltage levels at a 5 second rate.

If the previous check is good, check TP JOUT for a 2.2 volt or 3.8 volt, inverted, full wave rectified signal with a +0.7 volt offset, switching between the two voltage levels at a 5 second rate.

Check the output of the level shifter, U104 pin 7, for the same signal as the previous check.

This signal is applied to the 300 Hz low pass filter. The filter output at TP JTR300 should be a dc voltage near ground (+-0.5 volts). The multiplexer output at TP1 should be near ground also.

Path 2

The transmitter is set to 1004 Hz single tone. Offset is measured for phase jitter in the 4 to 300 Hz band.

First check for the proper input signal at TP PJIN. This signal should be a 2.2 volt or 3.8 volt peak-to-peak sine wave, at 1004 Hz, with no dc offset. The signal levels alternately switch at a 5 second rate.

Check the output of the sine-to-square wave converter at TP SWI. This should be a 0 to +5 volt square wave at 1004 Hz.

If the previous checks are correct, check the phase lock loop output at U406 pin 1. This signal should be a 0 to +5 volt square wave at 2008 Hz. This signal is applied to the level shifter.

Check the output of the level shifter, U104 pin 1, for the previous square wave except here it is symmetrical about ground.

This level shifted signal is applied to the 300 Hz low pass filter. The filter output at TP JTR300 should be a dc voltage near ground (+-0.5 volts). The multiplexer output at TP1 should be near ground also.

Path 3

The transmitter is set to 1004 Hz single tone. Offset is measured for amplitude jitter in the 20 to 300 Hz band.

First check for the proper input signal at TP AJIN. This signal should be a +1.1 or +1.9 volt, full wave rectified signal, at 2008 Hz, switching between the two voltage levels at a 5 second rate.

Check the output of the 20 Hz high pass filter, U504 pin 8. Look for a +1.1 volt or a +1.9 volt, full wave rectified signal with -0.3 volt offset, switching between the two voltage levels at a 5 second rate.

If the previous check is good, check TP JOUT for a 2.2 volt or 3.8 volt, inverted, full wave rectified signal with a +0.7 volt offset, switching between the two voltage levels at a 5 second rate.

Check the output of the level shifter, U104 pin 7, for the same signal as the previous check.

This signal is applied to the 300 Hz low pass filter. The filter output at TP JTR300 should be a dc voltage near ground (+-0.5 volts). The multiplexer output at TP1 should be near ground also.

Path 4

The transmitter is set to 1004 Hz single tone. Offset is measured for phase jitter in the 20 to 300 Hz band.

First check for the proper input signal at TP PJIN. This signal should be a 2.2 volt or 3.8 volt peak-to-peak sine wave, at 1004 Hz, with no dc offset. The signal levels alternately switch at a 5 second rate.

Check the output of the sine-to-square wave converter at TP SW1. This should be a 0 to +5 volt square wave at 1004 Hz.

If the previous checks are correct, check the phase lock loop output at U406 pin 1. This signal should be a 0 to +5 volt square wave at 2008 Hz. This signal is applied to the level shifter.

Check the output of the level shifter, U104 pin 1, for the previous square wave except here it is symmetrical about ground.

This level shifted signal is applied to the 300 Hz low pass filter. The filter output at TP JTR300 should be a dc voltage near ground (+-0.5 volts). The multiplexer output at TP1 should be near ground also.

Path 5

The transmitter is set to 1004 Hz single tone. Offset is measured for amplitude jitter in the 4 to 20 Hz band.

First check for the proper input signal at TP AJIN. This signal should be a +1.1 or +1.9 volt, full wave rectified signal, at 2008 Hz, switching between the two voltage levels at a 5 second rate.

Check the output of the 4 Hz high pass filter, U504 pin 8. Look for a +1.1 volt or a +1.9 volt, full wave rectified signal with -0.3 volt offset, switching between the two voltage levels at a 5 second rate.

If the previous check is good, check TP JOUT for a 2.2 volt or 3.8 volt, inverted, full wave rectified signal with a +0.7 volt offset, switching between the two voltage levels at a 5 second rate.

Check the output of the level shifter, U104 pin 7, for the same signal as the previous check.

This signal is applied to the 20 Hz low pass filter. The filter output at TP JTR200 should be a dc voltage near ground (+-0.5 volts). The multiplexer output at TP1 should be near ground also.

Path 6

The transmitter is set to 1004 Hz single tone. Offset is measured for phase jitter in the 4 to 20 Hz band.

First check for the proper input signal at TP PJIN. This signal should be a 2.2 volt or 3.8 volt peak-to-peak sine wave, at 1004 Hz, with no dc offset. The signal levels alternately switch at a 5 second rate.

Check the output of the sine-to-square wave converter at TP SW1. This should be a 0 to +5 volt square wave at 1004 Hz.

If the previous checks are correct, check the phase lock loop output at U406 pin 1. This signal should be a 0 to +5 volt square wave at 2008 Hz. This signal is applied to the level shifter.

Check the output of the level shifter, U104 pin 1, for the previous square wave except here it is symmetrical about ground.

This level shifted signal is applied to the 20 Hz low pass filter. The filter output at TP JTR200 should be a dc voltage near ground (+-0.5 volts). The multiplexer output at TP1 should be near ground also.

Path 7

The transmitter is set for a 1004 Hz carrier and a second tone at 1104 Hz that is 20 dB down from the carrier. The gain constant is measured for amplitude jitter in the 4 to 300 Hz band.

First check for the proper input signal at TP AJIN. This signal should be a +1.1 or +1.9 volt, full wave rectified signal, at 2008 Hz, switching between the two voltage levels at a 5 second rate. See figure "Mode 18 - 1". The 100 Hz difference frequency is riding on the carrier.

Check the output of the 4 Hz high pass filter, U504 pin 1. Look for the same signal as in the previous check with a slight dc offset.

If the previous check is good, check TP JOUT for a 2.2 volt or 3.8 volt, inverted, full wave rectified signal with a +0.7 volt offset, switching between the two voltage levels at a 5 second rate. See Figure "Mode 18 - 2". The signal frequency is 2008 Hz with a 100 Hz envelope.

Check the output of the level shifter, U104 pin 7, for the same signal as the previous check.

This signal is applied to the 300 Hz low pass filter. The filter output at TP JTR300 should be a 100 Hz sine wave switching between 2.4 volts and 4.0 volts. The multiplexer output at TP1 should be the same signal.

Path 8

The transmitter is set for a 1004 Hz carrier and an 1104 Hz second tone 20 dB down from the carrier. The phase jitter gain constant is measured in the 4 to 300 Hz band.

First check for the proper input signal at TP PJIN. This signal should be a 2.3 volt or 3.9 volt peak-to-peak sine wave, at 1004 Hz, with no dc offset. The 100 Hz difference frequency is riding on the carrier. See Figure "Mode 18 - 3". The signal levels alternately switch at a 5 second rate.

Check the output of the sine-to-square wave converter at TP SW1. This should be a 0 to +5 volt square wave at 1004 Hz.

If the previous checks are correct, check the phase lock loop output at U406 pin 1. This signal should be a 0 to +5 volt square wave at 2008 Hz. This signal is applied to the level shifter.

Check the output of the level shifter, U104 pin 1, for the previous square wave except here it is symmetrical about ground.

This level shifted signal is applied to the 300 Hz low pass filter. The filter output at TP JTR300 should be a 100 Hz sine wave at 2.8 volts peak-to-peak. The multiplexer output at TP1 should be the same signal.

Path 9

The transmitter is set for a 1004 Hz carrier and a second tone at 1104 Hz that is 20 dB down from the carrier. The gain constant is measured for amplitude jitter in the 20 to 300 Hz band.

First check for the proper input signal at TP AJIN. This signal should be a +1.1 or +1.9 volt, full wave rectified signal, at 2008 Hz, switching between the two voltage levels at a 5 second rate. See figure "Mode 18 - 1". The 100 Hz difference frequency is riding on the carrier.

Check the output of the 20 Hz high pass filter, U504 pin 8. Look for the same signal as in the previous check with a slight dc offset.

If the previous check is good, check TP JOUT for a 2.2 volt or 3.8 volt, inverted, full wave rectified signal with a +0.7 volt offset, switching between the two voltage levels at a 5 second rate. See Figure "Mode 18 - 2". The signal frequency is 2008 Hz with a 100 Hz envelope.

Check the output of the level shifter, U104 pin 7, for the same signal as the previous check.

This signal is applied to the 300 Hz low pass filter. The filter output at TP JTR300 should be a 100 Hz sine wave switching between 2.4 volts and 4.0 volts. The multiplexer output at TP1 should be the same signal.

Path 10

The transmitter is set for a 1004 Hz carrier and an 1104 Hz second tone 20 dB down from the carrier. The phase jitter gain constant is measured in the 20 to 300 Hz band.

First check for the proper input signal at TP PJIN. This signal should be a 2.3 volt or 3.9 volt peak-to-peak sine wave, at 1004 Hz, with no dc offset. The 100 Hz difference frequency is riding on the carrier. See Figure "Mode 18 - 3". The signal levels alternately switch at a 5 second rate.

Check the output of the sine-to-square wave converter at TP SW1. This should be a 0 to +5 volt square wave at 1004 Hz.

If the previous checks are correct, check the phase lock loop output at U408 pin 1. This signal should be a 0 to +5 volt square wave at 2008 Hz. This signal is applied to the level shifter.

Check the output of the level shifter, U104 pin 1, for the previous square wave except here it is symmetrical about ground.

This level shifted signal is applied to the 300 Hz low pass filter. The filter output at TP JTR300 should be a 100 Hz sine wave at 2.8 volts peak-to-peak. The multiplexer output at TP1 should be the same signal.

Path 11

The transmitter is set for a 1004 Hz carrier and a second tone at 1014 Hz that is 20 dB down from the carrier. The gain constant is measured for amplitude jitter in the 4 to 20 Hz band.

First check for the proper input signal at TP AJIN. This signal should be a +1.1 or +1.9 volt, full wave rectified signal, at 2008 Hz, switching between the two voltage levels at a 5 second rate. The signal is similar to figure "Mode 18 - 1", except the 10 Hz difference frequency is riding on the carrier (hard to detect on scope).

Check the output of the 4 Hz high pass filter, U504 pin 8. Look for the same signal as in the previous check with a slight dc offset.

If the previous check is good, check TP JOUT for a 2.2 volt or 3.8 volt, inverted, full wave rectified signal with a +0.7 volt offset, switching between the two voltage levels at a 5 second rate. The signal is similar to Figure "Mode 18 - 2" except the 10 Hz difference frequency is riding on the carrier (hard to detect on scope).

Check the output of the level shifter, U104 pin 7, for the same signal as the previous check.

This signal is applied to the 20 Hz low pass filter. The filter output at TP JTR200 should be a 10 Hz sine wave switching between 2.4 volts and 4.0 volts. The multiplexer output at TP1 should be the same signal.

Path 12

The transmitter is set for a 1004 Hz carrier and an 1014 Hz second tone 20 dB down from the carrier. The phase jitter gain constant is measured in the 4 to 20 Hz band.

First check for the proper input signal at TP PJIN. This signal should be a 2.3 volt or 3.9 volt peak-to-peak sine wave, at 1004 Hz, with no dc offset. The 10 Hz difference frequency is riding on the carrier. This signal is similar to Figure "Mode 18 - 3", except the envelope frequency is 10 Hz (hard to detect on scope). The signal levels alternately switch at a 5 second rate.

Check the output of the sine-to-square wave converter at TP SW1. This should be a 0 to +5 volt square wave at 1004 Hz.

If the previous checks are correct, check the phase lock loop output at U406 pin 1. This signal should be a 0 to +5 volt square wave at 2008 Hz. This signal is applied to the level shifter.

Check the output of the level shifter, U104 pin 1, for the previous square wave previous square wave except here it is symmetrical about ground.

This level shifted signal is applied to the 20 Hz low pass filter. The filter output at TP JTR200 should be a 10 Hz sine wave at 2.8 volts peak-to-peak. The multiplexer output at TP1 should be the same signal.

Mode 18 Common Failure Trends

Failed Segments	Suspect
2, 6, 8 and 12	4 Hz Phase Lock Loop
4 and 10	20 Hz Phase Lock Loop
1, 5, 7 and 11	4 Hz High Pass Filter
3 and 9	20 Hz High Pass Filter
5, 6, 11 and 12	20 Hz Low Pass Filter
1, 2, 3, 4, 7, 8, 9 and 10	300 Hz Low Pass Filter
2, 4, 6, 8, 10 and 12	Sine-to-Square Wave Converter or the Phase Jitter Level Shifter
1, 3, 5, 7, 9 and 11	Amplitude Jitter Level Shifter

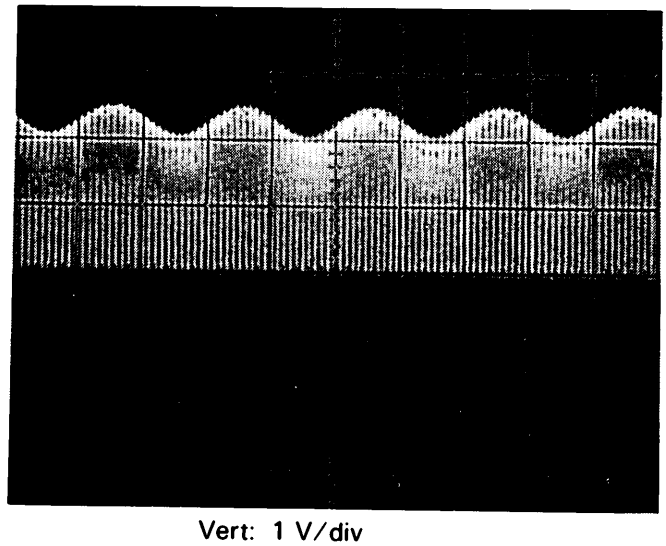

Vert: 1 V/div
Horiz: depends on frequency

Mode 18 - 1

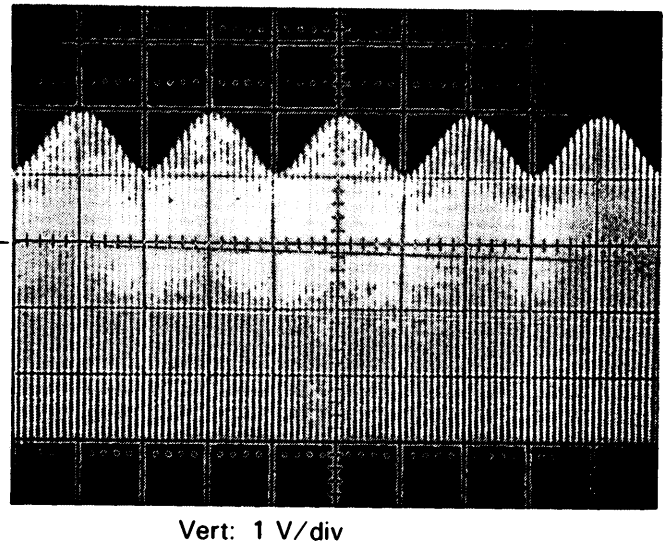

Vert: 1 V/div
Horiz: depends on frequency

Mode 18 - 2

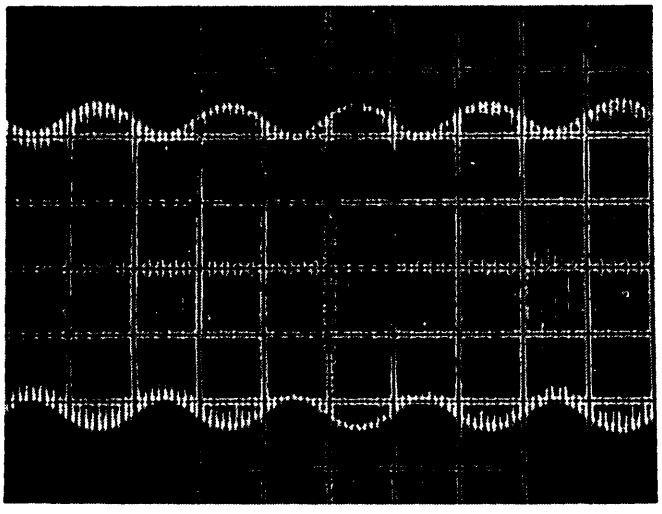

Vert: 1 V/div
Horiz: 1 msec/div

Mode 18 - 3

Figure 8-12. Mode 18 Waveforms

8-39. MODE 19: Envelope Delay Hardware Check (A7)

This mode attempts to verify the A7 hardware and its accuracy. A transmit signal from A17 is sent to the A4 input multiplexer. The signal is sent through the A4 wideband amplifier to A7 where it goes through the HI-Q filter and then to the A5 FWA wideband detector.

Be sure to run Mode 2 (detector calibration) before running this mode.

If inconsistent calibration data is used (e.g., default calibration constants), this mode is sensitive enough to have errors occur. This sensitivity is due to the fact that the A7 output signals route directly to A5 with no autoranging done.

Following is a summary of the Mode 19 tests.

Data Segment	Results Displayed	Transmit Signal	Test	Path
1	6.6 +- 2.0 dB	EDD CAL, 9 dBm(600)	HI-Q/CAL	1
2	10.3 +- 2.0 dB	41.75 Hz, 0 dBm(600)	HI-Q/AGC	2
3	0.0 +-0.5 dB	41.75 Hz, 5 dBm(600)	HI-Q/AGC	3
4	6.0 +-1.0 dB	41.0 Hz, 0 dBm(600)	HI-Q	4
5	5.0 +-1.0 dB	42.25 Hz, 0 dBm(600)	HI-Q	5
6	13.25 +-1.5 dB	40.75 Hz, 0 dBm(600)	TUNING	6
7	not used			
8	.03 +-2.5 dB	2000 Hz, -34 dBm(600)	FSK BPF	7
9	-3.5 +-1.0 dB	1845 Hz, -34 dBm(600)	FSK BPF	8
10	-3.5 +-1.0 dB	2166 Hz, -34 dBm(600)	FSK BPF	9
11	not used			
12	0 +12000/-0 usec	ED/1 kHz, 0 dBm(600)	Delay	10
13	3000 +-30 usec	ED/1 kHz 0 dBm(600)	Delay	10
14	3000 +-30 usec	ED/1 kHz 0 dBm(600)	Delay	10
15	3000 +-30 usec	ED/1 kHz 0 dBm(600)	Delay	10
16	3000 +-30 usec	ED/1 kHz 0 dBm(600)	Delay	10

General Mode 19 Troubleshooting

The filter sweeps for the A7 board are not like any other mode. The HI-Q filter tunes itself to any signal within +-5 Hz of 83 1/3 Hz. To measure the frequency response, the self tuning feature must be disabled. However, disabling the self tuning does not lock the filter in a stable configuration.

When the full mode is being run, the filter first tunes itself then paths 2 through 6 are performed.

When only one segment is being run, the filter goes through a 5 second tuning period followed by a 5 second test period to keep the filter from drifting.

In the first four paths, the test is attempting to establish the same path as when the jumper at the top of the board is placed in the CAL position.

The 2 kHz BPF is a special case because it preceeds the AGC in the filter path. A signal level that is too low for the AGC to amplify correctly must be applied to insure a constant gain through the AGC. An envelope delay signal is used because only the amplitude of the modulation is measured. The change in modulation level does not correspond directly to the filter attenuation of the different carrier frequencies because the modulation sidebands have different weightings depending on where it falls on the filter characteristic.

If paths 2 through 6 fail, suspect filter misadjustment, bad tuning FET, slow optoisolator, filter component failures, bad integrator and misplaced jumpers.

Following is a description of the Mode 19 paths.

Path 1 (Data Segment 1)

The EDD calibration signal from A14 is sent to the HI-Q input via the analog switch on A7. The HI-Q output is connected to the FWA wideband detector. This checks the modulation level and the HI-Q center frequency gain. The cal signal is attenuated 12.5 dB on A7.

Check the following points on A7 for an 83.3 Hz sine wave.

Check A7 JU10 for 1.46 volts p-p (0.5 Vrms).

Check A7 TP207 for 2.9 volts p-p (1 Vrms).

Check A7 TP106 for 5.9 volts p-p (2 Vrms).

Check A7 TP1 for 2.85 volts p-p (1 Vrms).

Check A7 TP2 for 5.4 volts p-p (1.87 Vrms).
(Occasional blinking of signal)

Check A7 TP100 for a tuning voltage of 4.08 volts dc.

Path 2 (Data Segment 2)

A 41.75 Hz sine wave from A17 is routed through A4 to A7 to check the level characteristics of the HI-Q filter. Half the desired frequency is used because the full wave rectifier on A7 doubles the fundamental frequency. The signal is routed to A5 for measurement.

Check A7 TP1 for an 83.5 Hz sine wave, 2.8 or 3.9 volts p-p (1.0 or 1.35 Vrms). The signal cycles between these two levels.

Check A7 TP2 for an 83.5 Hz sine wave, 5.4 or 7.4 volts p-p (1.85 or 2.55 Vrms). The signal cycles between these two levels.

Path 3 (Data Segment 3)

A 41.75 Hz sine wave from A17 is routed through A4 to A7 to check the level characteristics of the HI-Q filter. This path is the same as path 2 except that the level is increased by 5 dB for an AGC check. Half the desired frequency is used because the full wave rectifier on A7 doubles the fundamental frequency. The signal is routed to A5 for measurement.

Check A7 TP1 for an 83.5 Hz sine wave, 2.8 or 3.9 volts p-p (1.0 or 1.35 Vrms). The signal cycles between these two levels.

Check A7 TP2 for an 83.5 Hz sine wave, 5.4 or 7.4 volts p-p (1.85 or 2.55 Vrms). The signal cycles between these two levels.

Path 4 (Data Segment 4)

A 41 Hz sine wave from A17 is routed through A4 to A7 to check the level characteristics of the HI-Q filter. Half the desired frequency is used because the full wave rectifier on A7 doubles the fundamental frequency. The signal is routed to A5 for measurement.

Check A7 TP1 for an 82 Hz sine wave, 2.8 or 3.9 volts p-p (1.0 or 1.35 Vrms). The signal cycles between these two levels.

Check A7 TP2 for an 82 Hz sine wave, 5.4 or 7.4 volts p-p (1.85 or 2.55 Vrms). The signal cycles between these two levels.

Path 5 (Data Segment 5)

A 42.25 Hz sine wave from A17 is routed through A4 to A7 to check the level characteristics of the HI-Q filter. Half the desired frequency is used because the full wave rectifier on A7 doubles the fundamental frequency. The signal is routed to A5 for measurement.

Check A7 TP1 for an 84.5 Hz sine wave, 2.8 or 3.9 volts p-p (1.0 or 1.35 Vrms). The signal cycles between these two levels.

Check A7 TP2 for an 84.5 Hz sine wave, 5.4 or 7.4 volts p-p (1.85 or 2.55 Vrms). The signal cycles between these two levels.

Path 6 (Data Segment 6)

A 40.75 Hz sine wave from A17 is routed through A4 to A7. The HI-Q filter is tuned to 84 Hz and the response is checked at 81.5 Hz. This checks the tuning function and response time. The signal is routed to A5 for measurement.

Check A7 TP1 for an 81.5 Hz sine wave, 1.5 or 3.6 volts p-p (0.5 or 1.30 Vrms). The signal cycles between these two levels.

Check A7 TP2 for an 81.5 Hz sine wave, 1.5 or 6.1 volts p-p (.53 or 2.13 Vrms). The signal cycles between these two levels.

Path 7 (Data Segment 8)

An EDD waveform with a 2000 Hz carrier frequency is internally looped to A7 and passes through the 2 kHz bandpass filter before being applied to the AGC. By measuring the amplitude of the 83 1/3 Hz modulation, the filter response is obtained indirectly. The AGC would normally compensate for any amplitude variation, however, the output is attenuated beyond the AGC range (-15 dBm 600). The AGC locks up at maximum gain.

Check the following points on A7 for a 2000 Hz sine wave modulated by the 83 1/3 Hz signal.

Check A7 TP807 for 0.6 volts p-p (0.15 Vrms).

Check A7 TP507 for 0.58 volts p-p (0.15 Vrms).

Check A7 TP505 for 0.57 volts p-p (0.15 Vrms).

Check A7 TP407 for 0.56 volts p-p (0.15 Vrms).

Path 8 (Data Segment 9)

An EDD waveform with a 1845 Hz carrier frequency is internally looped to A7 and passes through the 2 kHz bandpass filter before being applied to the AGC. By measuring the amplitude of the 83 1/3 Hz modulation, the filter response is obtained indirectly. The AGC would normally compensate for any amplitude variation, however, the output is attenuated beyond the AGC range (-34 dBm 600). The AGC locks up at maximum gain.

Check the following points on A7 for a 1845 Hz sine wave modulated by the 83 1/3 Hz signal.

Check A7 TP807 for 0.6 volts p-p (0.15 Vrms).

Check A7 TP507 for 0.48 or 0.58 volts p-p (0.12 or 0.15 Vrms).

Check A7 TP505 for 0.39 or 0.57 volts p-p (0.1 or 0.15 Vrms).

Check A7 TP407 for 0.32 or 0.56 volts p-p (0.08 or 0.15 Vrms).

Path 9 (Data Segment 10)

An EDD waveform with a 2166 Hz carrier frequency is internally looped to A7 and passes through the 2 kHz bandpass filter before being applied to the AGC. By measuring the amplitude of the 83 1/3 Hz modulation, the filter response is obtained indirectly. The AGC would normally compensate for any amplitude variation, however, the output is attenuated beyond the AGC range (-15 dBm 600). The AGC locks up at maximum gain.

Check the following points on A7 for a 2166 Hz sine wave modulated by the 83 1/3 Hz signal.

Check A7 TP807 for 0.6 volts p-p (0.15 Vrms).

Check A7 TP507 for 0.48 or 0.58 volts p-p (0.12 or 0.15 Vrms).

Check A7 TP505 for 0.39 or 0.57 volts p-p (0.1 or 0.15 Vrms).

Check A7 TP407 for 0.32 or 0.56 volts p-p (0.08 or 0.15 Vrms).

Path 10 (Data Segments 12 thru 16)

An EDD waveform with an 1804 Hz carrier frequency is sent to A7. A delay measurement is taken and used as a start reference. The 1 MHz transmitter clock is delayed 3000 microseconds, four times. After each measurement, the result of the previous measurement is subtracted from it. Each subtraction should yield -3000. This checks the accuracy of the zero delay circuit, the linearity of the phase measurement circuit, and the general digital functions.

The software averages 32 readings for each A7 reading so the signals monitored below should appear in groups of 32. There is a 5 second settling period between each set of measurements when this segment is run continuously. If data segment 12 remains constant (+-5 microseconds) when running the segment continuously, then the zero delay circuit is working, the 1 MHz clock is present and the counters function.

If the segments all read the same, or zero, the tri-state buffers could be stuck in one position.

If data segments 13 through 16 fail, check the following points on A7.

Check A7 TP600 for a gated 1 MHz TTL signal (See Figure Mode 19-1). The duty cycle depends on the delay.

Check A7 TP602 for a positive TTL spike about every 12 milliseconds. See Figure Mode 19 - 2.

Check A7 U500 pin 9 for an 83.33 Hz square wave.

Check A7 U602 pin 8 for a 1 MHz square wave.

Check A7 U802 pin 9 for a negative TTL spike about every 12 milliseconds (See Figure Mode 19 - 3).

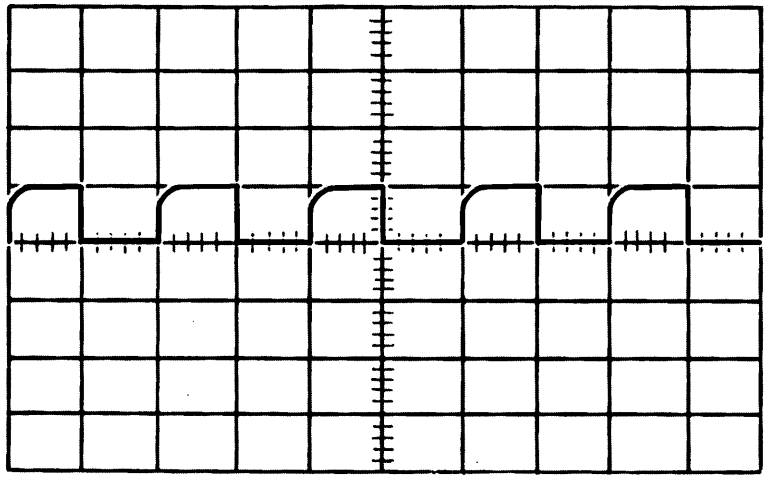

Vert: 5 V/div
Horiz: .5 μsec/div

Figure Mode 19-1

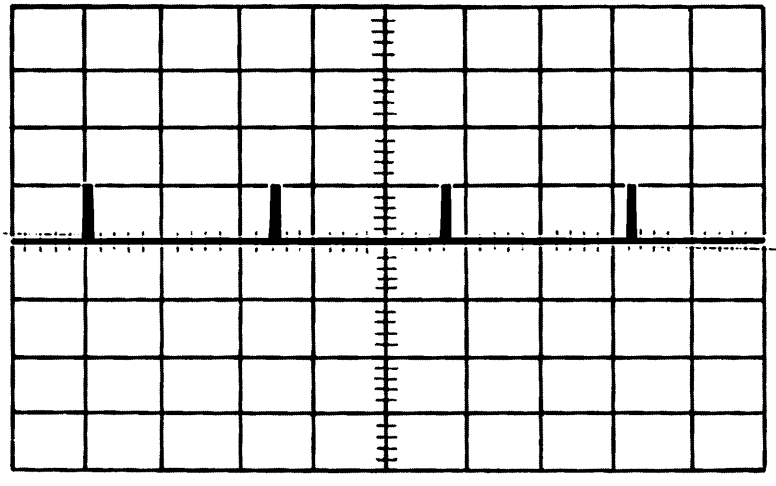

Vert: 5 V/div
Horiz: 5 msec/div

Figure Mode 19-2

Figure Mode 19-3

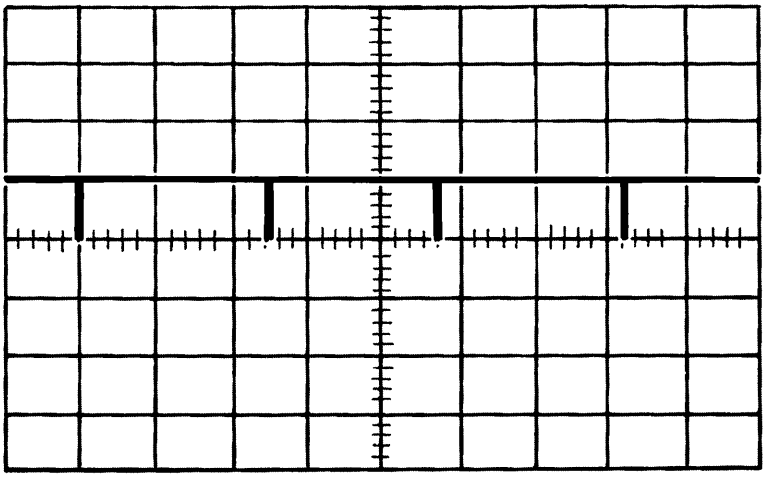

Vert: 5 V/div
Horiz: 5 msec/div

Figure 8-13. Mode 19 Waveforms

8-40. MODE 20: Envelope Delay Calibration

Envelope delay calibration is software compensation for the 4945's receiver and transmitter deviation from linear phase. The deviation is measured by comparing the delay at 1804 Hz to the delays at frequencies from 200 to 840 Hz at 64 Hz intervals. These values are stored in a table and used to correct envelope delay measurements taken at frequencies covered in the table. Interpolation is used to calculate intermediate values. The correction provides a delay flatness of +-4 microseconds. At frequencies above 840 Hz, delay flatness is assumed not to be a problem.

The transmitter signal is routed from A17 to the A1 multiplexer, through A2 and A4 (wideband autorange) and then to A7.

Following is a summary of the Mode 20 tests.

Data Segment	Results Displayed	Test	Path
1	0 +- 70 usec	200 Hz, 0 dBm(600)	1
2	0 +- 50 usec	264 Hz, 0 dBm(600)	2
3	0 +- 40 usec	328 Hz, 0 dBm(600)	3
4	0 +- 30 usec	392 Hz, 0 dBm(600)	4
5	0 +- 30 usec	456 Hz, 0 dBm(600)	5
6	0 +- 20 usec	520 Hz, 0 dBm(600)	6
7	0 +- 20 usec	584 Hz, 0 dBm(600)	7
8	0 +- 20 usec	648 Hz, 0 dBm(600)	8
9	0 +- 10 usec	712 Hz, 0 dBm(600)	9
10	0 +- 10 usec	776 Hz, 0 dBm(600)	10
11	0 +- 10 usec	840 Hz, 0 dBm(600)	11
12 thru 16	not used		

General Mode 20 Troubleshooting

Although this is a calibration mode, this mode does check the envelope delay distortion of boards A2 through A7 (A1 partially) in conjunction with the ST17 signal delay distortion. A failure here could indicate poor low frequency response of the receiver, faulty ac coupling or excessive delay or other distortion in the transmit signal. If this mode fails, the previous modes can be used to isolate the problem.

Following is a description of the test paths.

Path 1

The delay at 200 Hz is measured. The reference delay at 1804 Hz is subtracted from the 200 Hz delay to produce a stored offset.

Path 2

The delay at 264 Hz is measured. The reference delay at 1804 Hz is subtracted from the 264 Hz delay to produce a stored offset.

Path 3

The delay at 328 Hz is measured. The reference delay at 1804 Hz is subtracted from the 328 Hz delay to produce a stored offset.

Path 4

The delay at 392 Hz is measured. The reference delay at 1804 Hz is subtracted from the 392 Hz delay to produce a stored offset.

Path 5

The delay at 456 Hz is measured. The reference delay at 1804 Hz is subtracted from the 456 Hz delay to produce a stored offset.

Path 6

The delay at 520 Hz is measured. The reference delay at 1804 Hz is subtracted from the 520 Hz delay to produce a stored offset.

Path 7

The delay at 584 Hz is measured. The reference delay at 1804 Hz is subtracted from the 584 Hz delay to produce a stored offset.

Path 8

The delay at 648 Hz is measured. The reference delay at 1804 Hz is subtracted from the 648 Hz delay to produce a stored offset.

Path 9

The delay at 712 Hz is measured. The reference delay at 1804 Hz is subtracted from the 712 Hz delay to produce a stored offset.

Path 10

The delay at 776 Hz is measured. The reference delay at 1804 Hz is subtracted from the 776 Hz delay to produce a stored offset.

Path 11

The delay at 840 Hz is measured. The reference delay at 1804 Hz is subtracted from the 840 Hz delay to produce a stored offset.

8-41. MODE 21: Transient Measurements Check (A9)

A 1004 Hz, .775 Vrms sine wave from A17 is sent to the A1 input multiplexer. Impulse noise is monitored through the wideband autorange with the C-message filter and the 1010 Hz notch filter switched in and measured on A8. Gain hits, phase hits and dropouts are monitored through the narrowband autorange with the transients filter switched in. Phase impairments are generated by programming frequency transitions into the transmitter and checked with the 20 degree phase hit detector. The gain hits detector is checked at the 2 dB and 6 dB threshold settings and checked against the receiver fine attenuator. The 12 dB dropout detector is also checked against the fine attenuator. The transmitter is then set to 1800 Hz to bypass the notch filter and the impulse noise thresholds are checked at 2 dB and 6 dB levels. In this case, the transmitter fine attenuator provides the reference. The fast count rate is checked by allowing a five second impulse noise count at 100 counts per second on a signal which should count all the time.

Following is a summary of the Mode 21 tests.

Data Segment	Test	Results Displayed	Path
1	PLL Balance Constant	0 +- 1	1
2	+20 Degree P.H. Constant	9 +- 4	1
3	-20 Degree P.H. Constant	9 +- 4	1
4	+2 dB Gain Hit Constant	88 +- 30	2
5	-2 dB Gain Hit Constant	88 +- 30	2
6	-6 dB Gain Hit Constant	56 +- 30	3
7	+6 dB Gain Hit Constant	56 +- 30	3
8	12 dB Dropout Constant	67 +- 25	4
9	95 dBrn I.N. HI Constant	10 +- 6	5
10	93 dBrn I.N. MID Constant	21 +- 5	5
11	91 dBrn I.N. LOW Constant	30 +- 4	5
12	101 dBrn I.N. HI Constant	10 +- 7	6
13	95 dBrn I.N. MID Constant	64 +- 6	6
14	89 dBrn I.N. LOW Constant	91 +- 4	6
15	100 Counts/sec Constant	500 +- 10	7
16	not used		

General Mode 21 Troubleshooting

If all paths fail, A9 may not be communicating with the receiver processor. A power-on self check error number 609 confirms this.

The impulse noise circuit is located on A8 while the rest of the detectors are on A9 with the transients processor. The transients filter is on A4 and can be checked with Mode 13. Impulse noise can be affected by a bad notch, bad C-message filter or gain offsets in the wideband channel.

If paths 2 and 3 fail, the gain hit detector is not working. If only one of these fail, suspect a digital problem in the threshold latch.

If path 4 fails, the dropout detector is not functioning.

If paths 5 and 6 fail, the impulse noise detectors on A8 are not working. If only one of these paths fail, or the same part on both paths fails , the corresponding threshold D to A convertor is not working.

If path 7 fails, the 2 MHz clock crystal, driving the transients processor is out of specifications.

Following is a description of each Mode 21 path.

Path 1 (Data Segments 1, 2 and 3)

A transmitter signal at 1004 Hz, .775 Vrms is sent to the A1 multiplexer. First the phase lock loop constant is checked. The 1004 Hz signal is varied (up and down) until the 20 degree phase hit count is triggered.

If the first part of path 1 fails, check the A9 R28 adjustment. Data segment 1 should be 0 and can be set to 0 with A9R28. Data segments 2 and 3 should read 8 or 9 which is the number of cycles of frequency shift forward and backward to test phase hit detection. If all three numbers fail, or the last two numbers fail and the first passes, the phase lock loop failed to lock or the bandwidth is altered due to component failure.

If the phase lock loop does not function properly, check the following points while running Mode 21, Data Segment 3.

Check A9 U405 pin 7 for a 1004 Hz sine wave, 2.2 volts p-p (.775 Vrms).

Check A9 U405 pin 1 for a half wave rectified signal (Figure Mode 21 - 2).

Check A9 U704 pin 8 for a 1004 Hz square wave.

Check A9 U606 pin 1 for a 1004 Hz square wave (level shifted).

Check A9 U606 pin 7 for a 1004 Hz square wave riding on a +3 volt dc bias.

Check A9 U605 pin 6 for the VCO ramp voltage (Figure Mode 21 - 3).

Check A9 U605 pin 3 for the pulse modulated VCO output (Figure Mode 21 - 4).

Check A9 U704 pin 13 for a 1004 Hz square wave.

Check A9 U704 pin 12 for a 1004 Hz square wave.

Check A9 TP2 for the waveforms shown in Figure Mode 21-1 A and B. 21-1A is seen in Data Segment 1. The square wave is steady when the phase lock loop is locked. 21-1B is seen in Data Segments 2 and three when the loop is out-of-lock. This occurs when the frequency is shifted back and forth.

Check A9 TP1 for the waveform shown in Figure Mode 21 - 5. This figure is a composite photo. It takes several sweeps for the whole cycle to be seen. The output ramp (shown in the middle) gets successively larger until the threshold (shown at the right) is reached, at which point the ramp flattens out (ringing is normal). Then the same pattern starts over.

Path 2 (Data Segments 4 and 5)

A transmitter signal at 1004 Hz, .775 Vrms is sent to the A1 multiplexer and the receiver fine attenuator. The attenuator is used to generate gain hits until the 2 dB counts stop.

Check A9 U703 pin 1 for the waveform shown in Figure Mode 21 - 6. In successive sweeps, the bottom of the waveform rises until the square wave disappears, and the dc level pulses to ground with large pulse widths. Then the pattern starts over.

Check A9 U703 pin 14 for a waveform similar to Figure Mode 21 - 6 except the squre wave is riding on a negative dc level. The top of the waveform falls until the square wave disappears and the dc level pulses about 0.8 volts positive.

Check A9 U504 pin 2 for the waveform shown in Figure Mode 21 - 7. At times phase jitter will be present because of the cycling self test.

Check A9 U504 pin 10 for a waveform similar to Figure Mode 21 - 6. The bottom of the waveform rises until the square wave disappears and the dc level pulses about 0.6 volts negative.

Path 3 (Data Segments 6 and 7)

A transmitter signal at 1004 Hz, .775 Vrms is sent to the A1 multiplexer and the receiver fine attenuator. The attenuator is used to generate gain hits until the 6 dB counts stop.

Check A9 U504 pin 2 for the waveform shown in Figure Mode 21 - 7. At times phase jitter may be present.

Check A9 U504 pin 10 for a waveform similar to Figure Mode 21 - 6. The bottom of the waveform rises until the square wave disappears and the dc level pulses about 0.2 volts negative.

Path 4 (Data Segment 8)

A transmitter signal at 1004 Hz, .775 Vrms is sent to the A1 multiplexer and the receiver fine attenuator. The attenuator is used to generate gain hits until dropout counts occur.

Check A9 U504 pin 4 for the waveform shown in Figure Mode 21 - 8. The signal begins to decrease, jumps to a +3.5 volt peak level and then the pattern starts over.

Check A9 U504 pin 5 for +0.87 volts dc.

Check A9 U803 pin 3 for the waveform shown in Figure Mode 21 - 4. The waveform is interrupted by bursts of a square wave.

Check A9 U504 pin 1 for a +5 volt level interrupted by burst of a square wave and negative pulses. A logic 0 is a dropout.

Check A9 U805 pin 4 for the waveform shown in Figure Mode 21 - 4, except the width of the pulses is larger.

Path 5 (Data Segments 9, 10 and 11)

A transmitter signal at 1800 Hz, 0 Vrms is sent to the A1 multiplexer through a 10dcB pad. The transmitter level is increased until all the impulse noise detectors on A8 count.

Check A8 U506 pin 7 for +1.43 volts dc.

Check A8 U506 pin 5 for +1.13 volts dc.

Check A8 U506 pin 9 for +0.89 volts dc.

Check A8 U402 pins 5 and 13 for the waveform shown in Figure Mode 21 - 11. The waveform slowly cycles between the pulse shown and ground.

Check A8 U503 pin 13 for a waveform similar to Figure Mode 21 - 11.

Check A8 U506 pin 6 for the waveform shown in Figure Mode 21 - 9. The waveform starts at 0 volts dc and increases to the pattern shown.

Path 6 (Data Segments 12, 13 and 14)

A transmitter signal at 1800 Hz, 0 Vrms is sent to the A1 multiplexer through a 10 dB pad. The transmitter level is increased until all the impulse noise detectors on A8 count.

Check A8 U506 pin 7 for +8.94 volts dc.

Check A8 U506 pin 5 for +4.46 volts dc.

Check A8 U506 pin 9 for +2.22 volts dc.

Check A8 U506 pin 6 for the waveform shown in Figure Mode 21 - 10. The waveform starts at 0 volts dc and increases to the pattern shown.

Path 7 (Data Segment 15)

A transmitter signal at 1800 Hz, 2.45 Vrms is sent to the A1 multiplexer through a 10 dB pad. The impulse noise counts are measured for five seconds at the fast count rate.

Check A8 U506 pin 6 for the waveform shown in Figure Mode 21 - 10. The waveform cycles between 0 volts and the pattern shown.

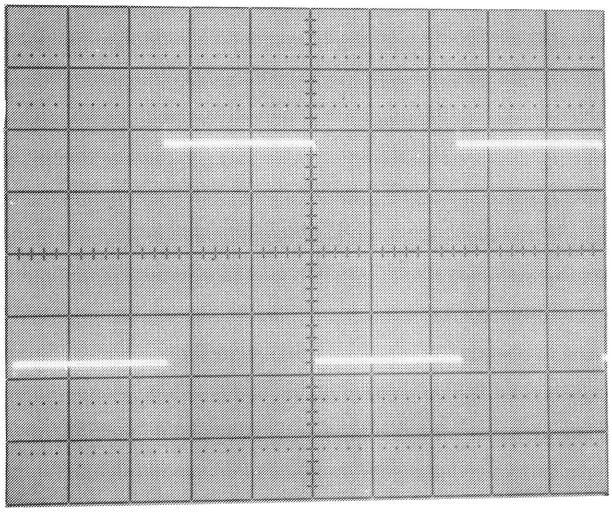

Vert: 2 V/div
Horiz: .2 msec/div

Figure Mode 21-1A

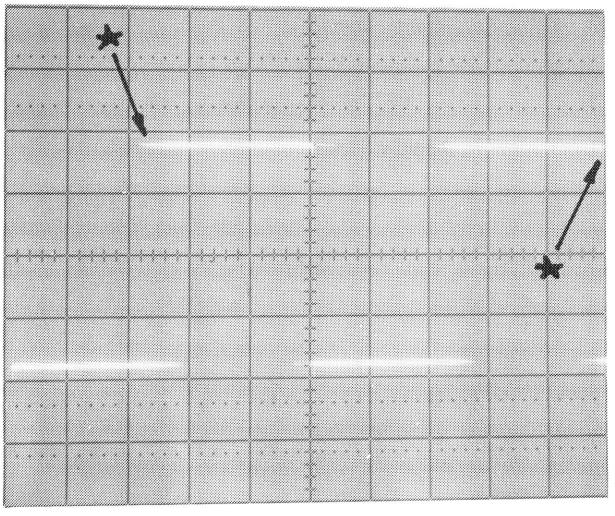

Vert: 5 V/div
Horiz: .5 msec/div

Figure Mode 21-1B

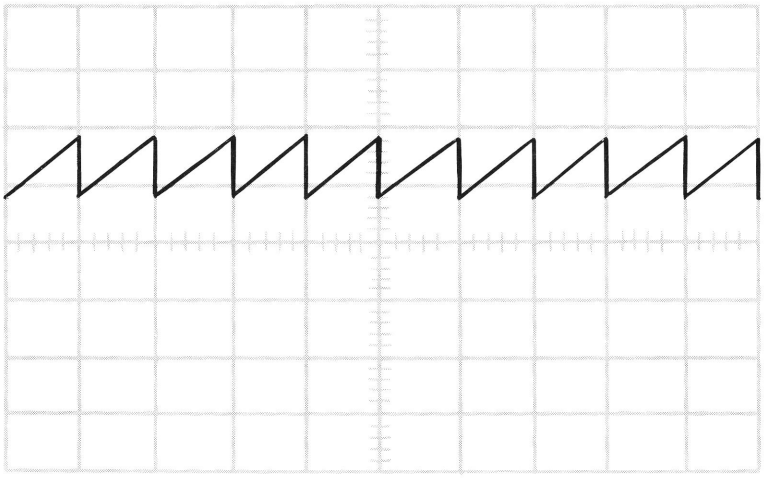

Vert: 2 V/div
Horiz: .5 msec/div

Figure Mode 21-3

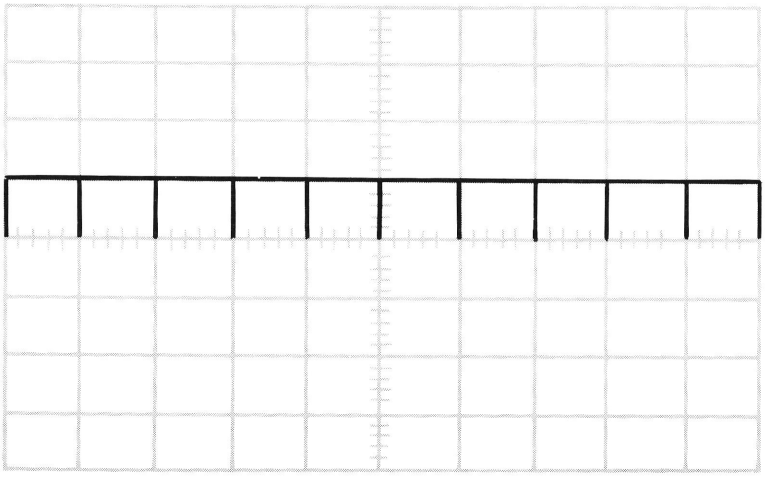

Vert: 5 V/div
Horiz: .5 msec/div

Figure Mode 21-4

Vert: 2 V/div
Horiz: 10 msec/div

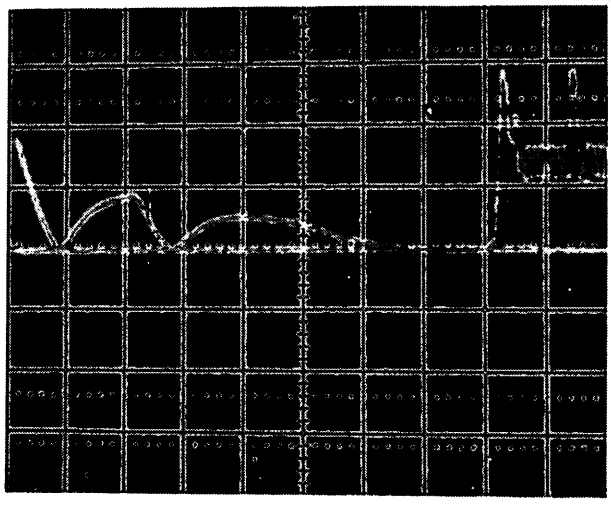

Figure Mode 21-5

Vert: 1 V/div
Horiz: 10 msec/div

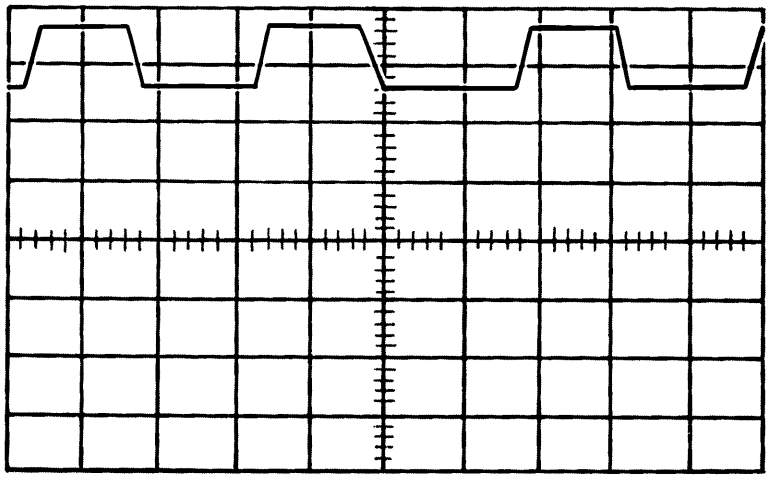

Figure Mode 21-6

Vert: 5 V/div
Horiz: .5 msec/div

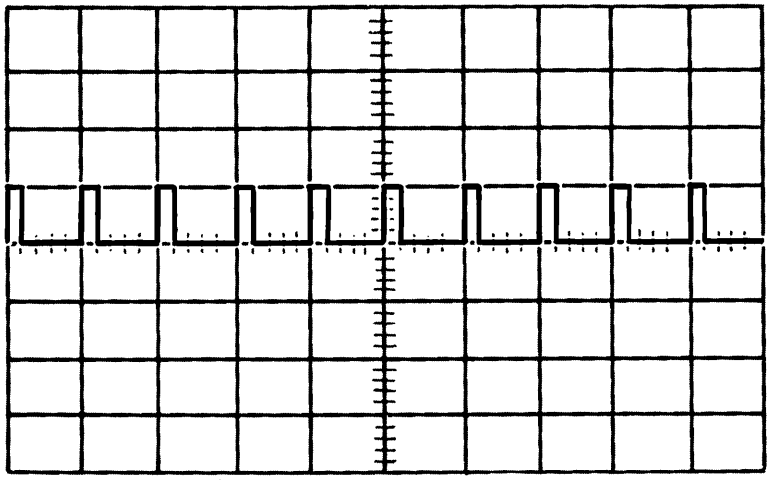

Figure Mode 21-7

Vert: 1 V/div
Horiz: .5 msec/div

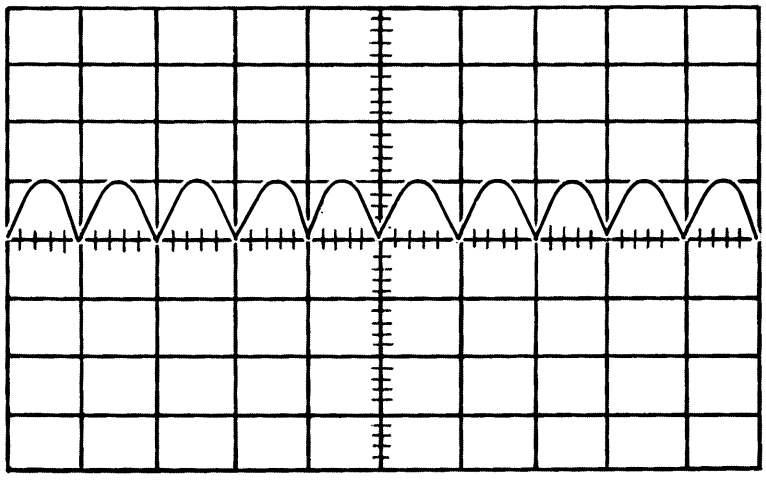

Figure Mode 21-8

Vert: 1 V/div
Horiz: .2 msec/div

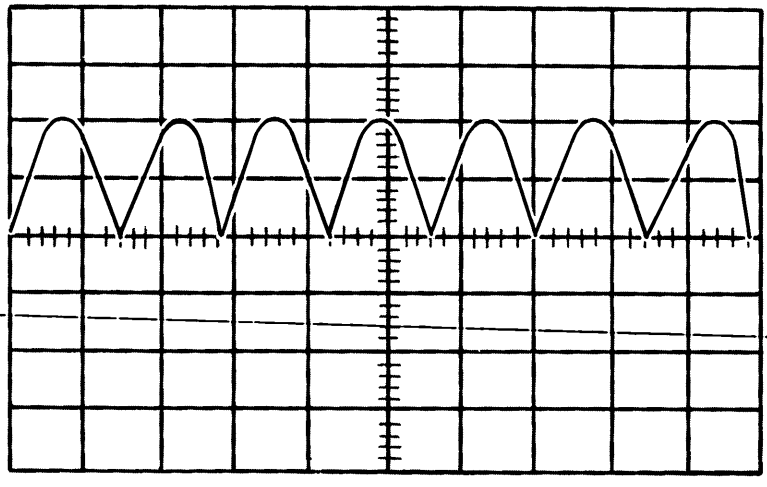

Figure Mode 21-9

Vert: 5 V/div
Horiz: .2 msec/div

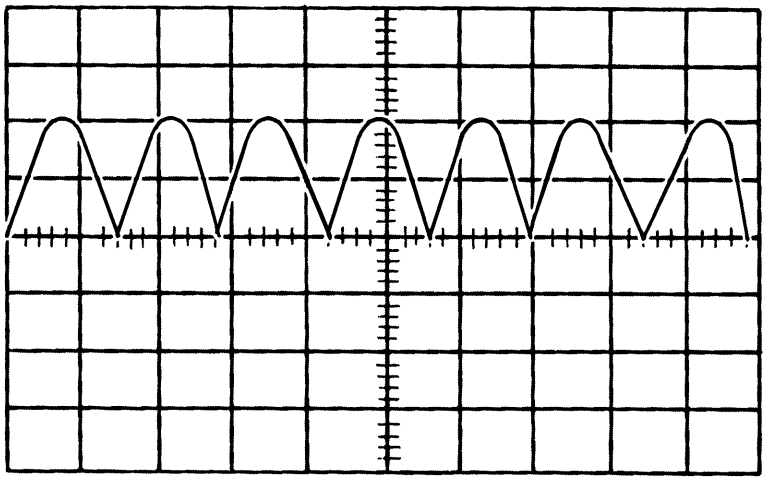

Figure Mode 21-10

Vert: 2 V/div
Horiz: .2 msec/div

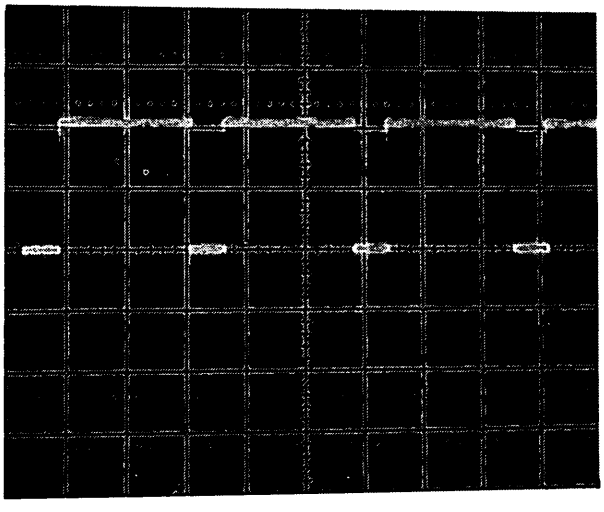

Figure Mode 21-11

Figure 8-14. Mode 21 Waveforms

8-42. MODE 22: A3 FSK Demodulation Check

The self test signal from A17 is connected directly to the A2 input multiplexer. A FSK signal at .775 Vrms is sent through the FSK demodulator on A3. Data is sent by the transmitter through the ACIA chip on A14. The data is decoded and compared to ensure a match. If the demodulation circuit is not working, an error shows as an unmatched data pair or an error flag indicating bad parity, overrun or framing.

Following is a summary of the Mode 22 tests.

Data Segment	Test	Results Displayed
1	01 ACIA Data	1
2	02 ACIA Data	2
3	04 ACIA Data	4
4	08 ACIA Data	8
5	10 ACIA Data	16
6	20 ACIA Data	32
7	40 ACIA Data	64
8	80 ACIA Data	128
9	FE ACIA Data	254
10	FD ACIA Data	253
11	FB ACIA Data	251
12	F7 ACIA Data	247
13	EF ACIA Data	239
14	DF ACIA Data	223
15	BF ACIA Data	151
16	7F ACIA Data	127

General Mode 22 Troubleshooting

The output data in this mode is actually two bytes. The MSB is the ACIA status word and the LSB is the ACIA data. If the MSB is zero (display data less than 256), then the ACIA has not detected an error.

Following is a description of the status byte. This will help you to decode the error number generated by the status register byte.

Bit	Decimal Value	Definition
0	256	Receive data register is not full
1	512	Transmit data register is not empty
2	1024	Data carrier not detected
3	2048	Not clear to send
4	4096	Framing error
5	8192	Receiver over run
6	16384	Parity error
7	32768	Interrupt request

If any segment fails, the number that appears can be used to isolate the problem.

If the number is less than 255, the 800 Hz or 1200 Hz phase lock loop is not operating properly, or the 800 Hz and 1000 Hz tones are not being transmitted.

If the number is between 256 and 511, the receive data register never got a complete word or there was a transmission problem.

If the number is between 512 and 1023, the transmit data was not sent, indicating a problem on A14.

If the number is between 1024 and 2047, the pilot tone detect circuit on A3 has failed. Also, the 1990 Hz pilot tone or the 800 Hz and 1200 Hz pilot tones are not being transmitted.

If the number is between 2048 and 4095, the ACIA on A14 is not functioning.

If the number is between 4096 and 8191, a framing error occurred. Possible transmitter error.

If the number is between 8192 and 16383, a receiver overrun error occurred. Possible A3 error.

If the number is between 16384 and 32767, a parity error occurred.

If the number is greater than 32768, the ACIA on A14 is bad.

Following is a description of each Mode 22 path.

Path 1

FSK data 01 hex is transmitted, read by the ACIA and compared for accuracy.

Path 2

FSK data 02 hex is transmitted, read by the ACIA and compared for accuracy.

Path 3

FSK data 04 hex is transmitted, read by the ACIA and compared for accuracy.

Path 4

FSK data 08 hex is transmitted, read by the ACIA and compared for accuracy.

Path 5

FSK data 10 hex is transmitted, ready by the ACIA and compared for accuracy.

Path 6

FSK data 20 hex is transmitted, ready by the ACIA and compared for accuracy.

Path 7

FSK data 40 hex is transmitted, ready by the ACIA and compared for accuracy.

Path 8

FSK data 80 hex is transmitted, read by the ACIA and compared for accuracy.

Path 9

FSK data FE hex is transmitted, read by the ACIA and compared for accuracy.

Path 10

FSK data FD hex is transmitted, read by the ACIA and compared for accuracy.

Path 11

FSK data FB hex is transmitted, read by the ACIA and compared for accuracy.

Path 12

FSK data F7 hex is transmitted, read by the ACIA and compared for accuracy.

Path 13

FSK data EF hex is transmitted, ready by the ACIA and compared for accuracy.

Path 14

FSK data DF hex is transmitted, ready by the ACIA and compared for accuracy.

Path 15

FSK data BF hex is transmitted, ready by the ACIA and compared for accuracy.

Path 16

FSK data 7F hex is transmitted, read by the ACIA and compared for accuracy.

For any segment failure, check the following points.

Check A14 TP902 for a pulsing square wave when data is being transmitted.

Check A17 U408 pin 1 for the waveform shown in Figure Mode 22 - 1.

Check A3 P1 pin 33 (or R116) for the waveform shown in Figure Mode 22 - 1.

Check A3 U300 pin 6 for the same waveform as Figure Mode 22 - 1 except only 1.1 volts p-p.

Check A3 TP1 for a 1990 Hz square wave (+- 10 Hz).

Check A3 U101 pin 8 for a logic 0, which indicates detect.

Check A3 U201 pin 7 for the waveform shown in Figure Mode 22 - 2.

Check A3 U601 pin 4 for a logic 0, which indicates detect. Pulses to a square wave when not detecting.

Check A3 U601 pin 2 for a pulsing square wave when data is being received.

Check A14 U902 pin 23 for a logic 0, which indicates detect. Pulses to a square wave when not detecting.

Check A14 TP901 for a pulsing square wave when data is being received.

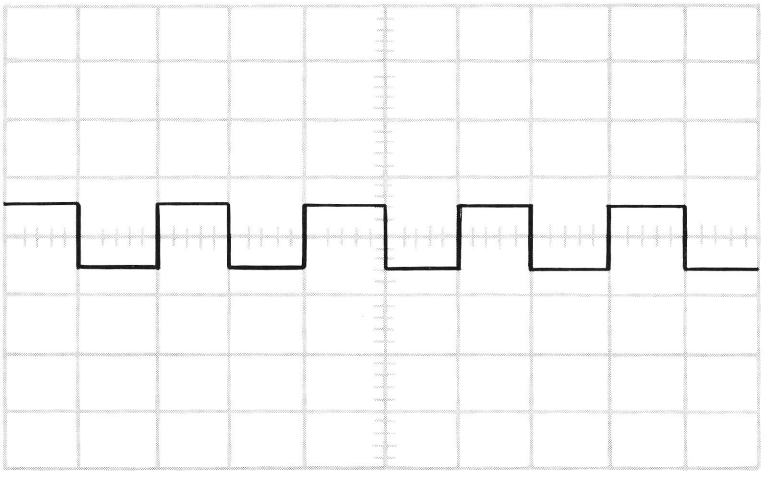

Figure Mode 22-1

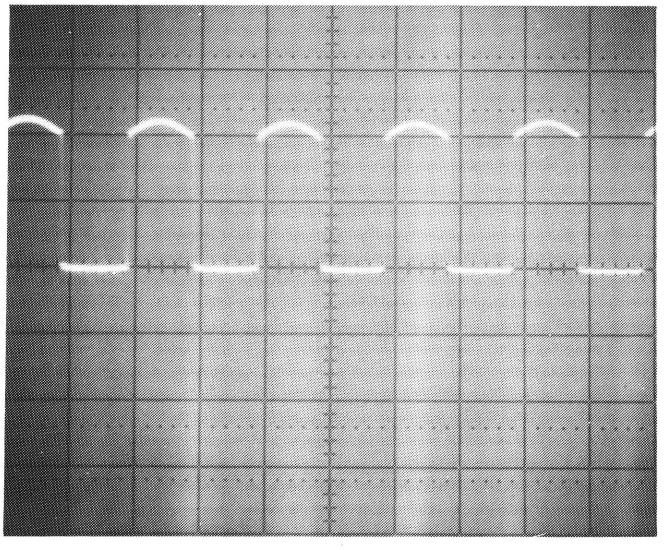

Figure Mode 22-2

Figure 8-15. Mode 22 Waveforms

8-43. PERFORMANCE VERIFICATION AND SERVICE AID MODE

Several modes of operation are available within the 4945A receiver to assist in evaluating the 4945A performance and troubleshooting the receiver measurements. As with the diagnostic self-checks, these modes are accessed through the self-test menu. These modes allow high resolution measurements through the receiver, independent of the 4945A measurement restrictions. These modes allow static set-up conditions for troubleshooting.

8-44. MODE 46: Filter Response Checks

This performance verification mode uses the receiver as a voltmeter and uses a different filter for each path. An external signal is input to the receiver. Depending on the path selected, one of the 4945A filters is switched into the signal path. By varying the signal frequency, the response of the filter can be checked by comparing the dB readings displayed with the values given in the response charts (See Chapter 4, Filter Tests) The true voltage and power of the signal are given. These measurements assume ideal termination impedances within the receiver.

Following is a summary of the Mode 46 tests.

Path	Channel Filters Wideband	Narrowband	Measured value in
1	Flat	Flat	FW average wideband
2	P/AR	P/AR	rms
3	1010 Hz notch 15 kHz	Flat	rms
4	50 kbit	Flat	rms
5	15 kHz	Flat	rms
6	3 kHz	Flat	rms
7	Program	Flat	rms
8	C-message	Flat	rms
9	Phase Jitter	Phase Jitter	rms
10	IMD 520 Hz	Flat	rms
11	IMD 1900 Hz	Flat	rms
12	IMD 2240 Hz	Flat	rms
13	IMD notch	Flat	rms
14	10 kHz LP	10 kHz LP	rms
15	60 Hz HP 3 kHz	60 Hz HP	rms
16	Flat	Transients filter	FW average narrowband

Following is a summary of the information displayed for the various paths.

Line	Display
1	XXXXXX rms voltage (wideband channel)
2	XXXXXX rms power (wideband channel)
4	XXXXXX average voltage (wideband channel)
5	XXXXXX rms equivalent power (wideband channel)
7	XXXXXX average voltage (narrowband channel)
8	XXXXXX rms equivalent power (narrowband channel)
10	XXXXXX peak voltage (wideband channel)
11	XXXXXX peak power in dBm (wideband channel)
14	XXXXXX peak power (narrowband channel)
15	XXXXXX peak power in dBm (narrowband channel)

8-45. MODE 47: DC Offset Settling Time (Narrowband)

This mode checks the dc offset settling times in the narrowband autorange amplifier when the gain is being switched in 10 dB steps. The receiver input at the A1 multiplexer is set to ground as well as the input to the A4 narrowband autorange amplifier.

When running the whole test, paths 1 through 8 evaluate the true settling time of the amplifier by waiting 500 msec between gain switching. Segments 9 through 16 use the programmed settling times to ensure that the times in paths 1 through 8 are correct.

When running a particular segment, the receiver enters a loop within the path that repeatedly switches the gain between two states. The voltage spike generated by the gain switching can be monitored at A4 TP5.

8-46. MODE 48: DC Offset Settling Time (Wideband)

This mode checks the dc offset settling times in the wideband autorange amplifier when the gain is being switched in 10 dB steps. The receiver input at the A1 multiplexer is set to ground as well as the input to the A4 wideband autorange amplifier.

When running the whole test, paths 1 through 8 evaluate the true settling time of the amplifier by waiting 500 msec between gain switching. Segments 9 through 16 use the programmed settling times to ensure that the times in paths 1 through 8 are correct.

When running a particular segment, the receiver enters a loop within the path that repeatedly switches the gain between two states. The voltage spike generated by the gain switching can be monitored at A4 TP5.

8-47. MODE 49: Filter Path Checks

This performance verification mode uses the receiver as a voltmeter and uses a different filter for each path. The signal level measured is referred to the receiver input weighted by the appropriate filter. The ac signal is measured for peak, average or rms value. The true voltage and power of the signal are given. These measurements assume ideal termination impedances within the receiver. Only some of the detector readings are displayed.

Following is a summary of the Mode 49 tests.

Path	Channel Filters	
	Wideband	Narrowband
1	Flat	Flat
2	P/AR	P/AR
3	1010 Hz notch kHz	Flat 15
4	50 kbit	Flat
5	15 kHz	Flat
6	3 kHz	Flat
7	Program	Flat
8	C-message	Flat
9	Phase Jitter	Phase Jitter
10	IMD 520 Hz	Flat
11	IMD 1900 Hz	Flat
12	IMD 2240 Hz	Flat
13	IMD notch	Flat
14	10 kHz LP	10 kHz LP
15	60 Hz HP	60 Hz HP 3 kHz
16	Flat	Transients filter

Following is a summary of the information displayed on the various display lines.

Line	Display
1	XXXXXX rms voltage (wideband channel)
2	XXXXXX rms power (wideband channel)
4	XXXXXX average voltage (wideband channel)
5	XXXXXX rms equivalent power (wideband channel)
7	XXXXXX average voltage (narrowband channel)
8	XXXXXX rms equivalent power (narrowband channel)
10	XXXXXX peak voltage (wideband channel)
11	XXXXXX peak power in dBm (wideband channel)
14	XXXXXX peak power (narrowband channel)
15	XXXXXX peak power in dBm (narrowband channel)

8-48. MODE 50: Super P/AR

This performance mode gives you a P/AR measurement with much higher resolution and accuracy than the standard measurement. This mode evaluates the hardware/ software performance in measuring the P/AR value. The displayed results are in thousandths of a P/AR unit.

8-49. MODE 51: Receiver Troubleshooting

This mode can assist you in troubleshooting the receiver. The receiver is used as a voltmeter and each path sets a different autorange amplifier gain so the autoranging is held at one static gain condition. This is useful for checking detector linearity and signal path continuity. Voltages are displayed if the detectors need to be checked.

Following is a summary of the Mode 51 tests.

Path	Gain (both amplifiers)
1	-10 dB
2	0 dB
3	10 dB
4	20 dB
5	30 dB
6	40 dB
7	50 dB
8	60 dB

Following is a summary of the information displayed on the various display lines.

Line	Display
1	XXXXXX rms voltage (wideband channel)
2	XXXXXX rms power (wideband channel)
4	XXXXXX average voltage (wideband channel)
5	XXXXXX rms equivalent power (wideband channel)
7	XXXXXX average voltage (narrowband channel)
8	XXXXXX rms equivalent power (narrowband channel)
10	XXXXXX peak voltage (wideband channel)
11	XXXXXX peak power in dBm (wideband channel)
14	XXXXXX peak power (narrowband channel)
15	XXXXXX peak power in dBm (narrowband channel)

8-50. MODE 52: IMD Relative Tone Adjustment

Level measurements are taken internally for the 1380 Hz tone pair and the 860 Hz tone pair. The two levels are subtracted and the results are displayed.

This mode can be used for adjusting the tone pairs to the same relative level (IMD Flatness). The level can be set to within +-0.1 dB of each other.

When the level difference is +-.5 dB or greater, the difference is displayed in inverse video to indicate a gross failure.

8-51. PROCESSORS/MEMORY SECTION

This section is the brains of the 4945A and contains three digital PC boards.

- A10 Receiver Processor (04945-60010)
- A11 System Processor (04945-60011)
- A12 System Memory (04945-60012)

The keyboard and the front panel decoder (A25) is also included in this section.

This section controls the activities of the other 4945A sections.

The System Processor directly controls the display section, the I/O interfaces and the transmitter section. The receiver section is controlled by the Receiver Processor. Control of the System Processor comes from the keyboard and the I/O interfaces.

Refer to the 4945A Block Diagram, the PC board block diagrams in this section and the schematic diagrams when reading this section.

8-52. System Processor (A11)

The system processor board (A11) is the master controller of the 4945A. It interfaces with the following instrument sections:

- The keyboard and the LED's (through A25)
- The display (through A13)
- The I/O interfaces
- The receiver (through A10)
- The transmitter (through A14)

The system microprocessor is a MC68B00. The associated microprocessor circuits include the power-on reset circuit, signature analysis jumpers. amd and buffers for the address bus, data bus and control signals.

Clock Generator

The system clock is based on a master clock of 16 MHz. A 16 MHz crystal is used with oscillator U503 to produce a TTL clock which is subsequently divided down and decoded (U201, U303 and U403) to produce 16 time shifted pulses of 62.5 ns duration. The pulses are used to set or reset J-K flip-flops(U102, U103, U202, U203 and U302) which are clocked at 16 MHz. This produces various 1 MHz clocks whose edges can be chosen in 62.5 increments. The flip-flops are all clocked by the same 16 MHz clock and are all synchronous with each other. There are nine different 1 MHz clocks produced along with an 8 MHz clock, and a 16 KHz clock.

The 1 MHz signals (from U203 and U205) are the PHI1 and PHI2 clocks which are used for write enable gating pulses on A11, A12 and A13, enable clock for the 6800 family chips, load/shift pulse for the A13 character generator, data transceiver enable gating pulse for A12 and A13, character clock for A13, and data bus enable (DBE) for the system microprocessor.

The PHI1 and PHI2 are also used by the receiver processor on A10. A11's PHI1 is A10's PHI2 and vice versa.

Before the two microprocessor clocks leave A11, they are buffered and inverted by a 50 ohm line driver (U205).

The 8 MHz clock is used by the A13 character generator for the dot clock.

The PHI1 and PHI2 clocks go through a clock shaping circuit (U600) before going to the system processor chip.

The 16 KHz clock is used by the transmitter to generate P/AR waveforms and the envelope delay distortion measurement's 83-1/3 Hz modulation frequency.

Microprocessor Bus Buffers

The 8 bit microprocessor data bus is buffered by a transceiver (U803), U801 and U802 buffer the 16 bit address bus, and part of U804 buffers the control signals.

Reset

The reset circuit resets all elements in the system. There are two ways to do a reset. The first is by power-up which is detected by an RC tied to the positive going input of one-shot U406 which in turn drives the reset input on the system processor. The second is by pressing the reset switch on A11.

Address Decoding

Several decoders are used to decode addresses (U500, U502, U601, U602 and U800). The decoders provide chip select signals for the various chips on A11 as well as board select signals for A10, A12, A13, A14 and the I/O modules. One decoder ouput has a special function, the receiver NMI.

Memory

The RAM on A11 is two, 2K x 8 static RAMs. One RAM is used as the system base page (U204). The other RAM is part of bank 0 (U404).

The ROM on A11 is a 4K x 8 EPROM (U604), mapped into the top 4K of address space. It is used for the microprocessor reset and interrupt vectors, system digital power-on self check software, and diagnostic SA routines.

Peripheral Interface Adapter

The peripheral interface adapter (PIA, U703) has two ports. Port A is used for outputs to the front panel LED's (7 bits) and a software controllable start/stop for diagnostic SA (1 bit). Port B receives inputs from the keyboard and IRQ line. The port

A outputs are buffered by U706 in order to produce the current to drive the LED's. Each line contains a series current-limiting resistor,100 ohm. Port B consists of 6 bits for the decoded keystroke, bit 7 is the keystrobe from A25 which indicates whether a key is still depressed, and bit 6 is the system IRQ line. The keystrobe pulse tells the PIA to interrupt the microprocessor.

Programmable Timer Module

The programmable timer module is U606. It has three counters that are cascaded together to allow timeouts for software timing, between 1 msec and several days.

Memory Bank Switching

The bankswitch latch (U607) is used to select a 16 K segment of the address space to be accessed. Only 1 bit of the 8 bit byte is allowed to be low (to enable a bank of memory) at any one time. The latch's output is enabled only when something in the 16 K segment is being addressed. This paging technique gives the microprocessor the capability of addressing 176 K bytes.

System Test Register

The system test register is the other half of the control line buffer U804. A set of four switches sets the inputs of the buffer high or low allowing for 15 loops of SA diagnostics.

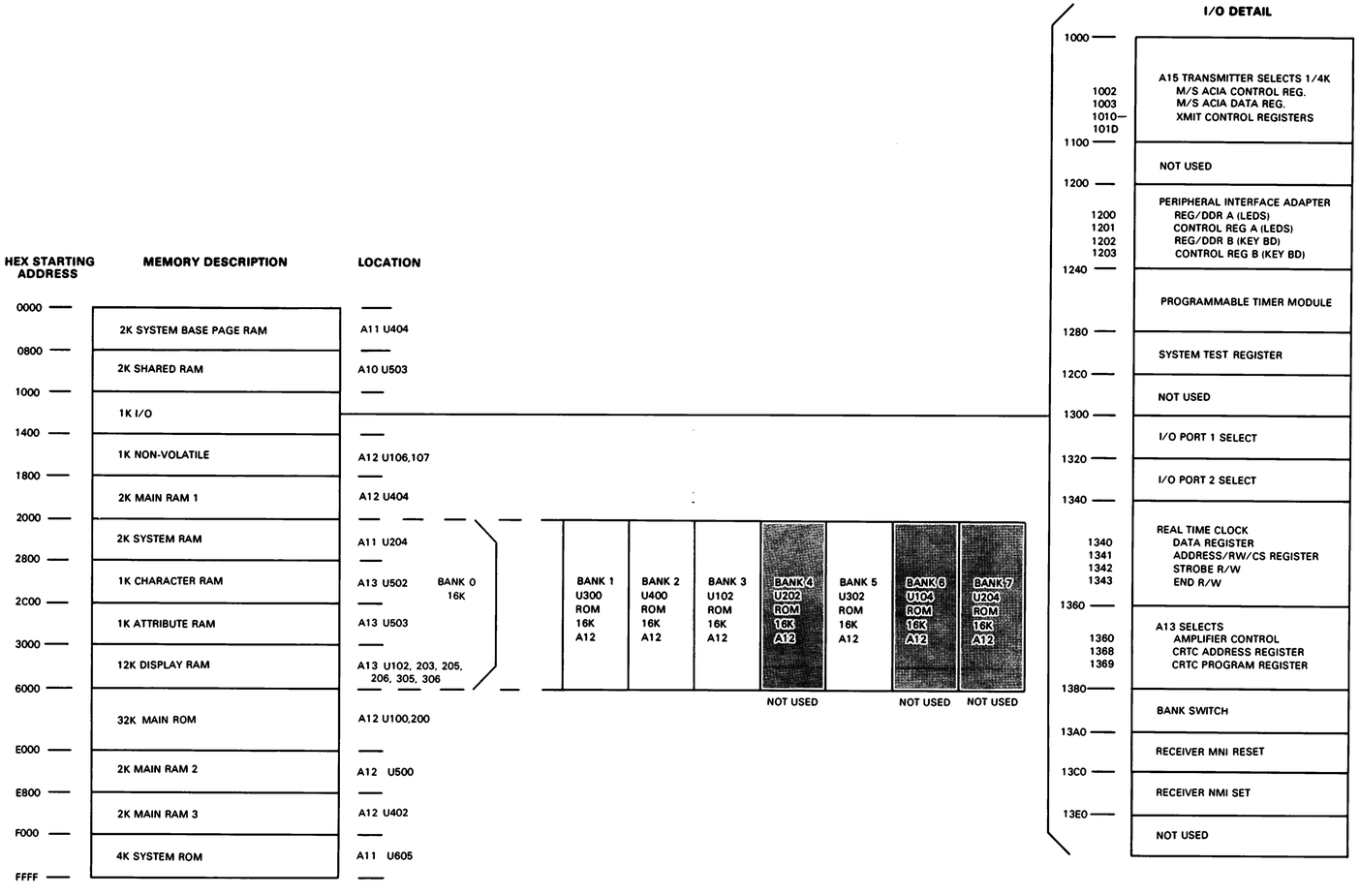

Figure 8-16. 4945A Memory Map

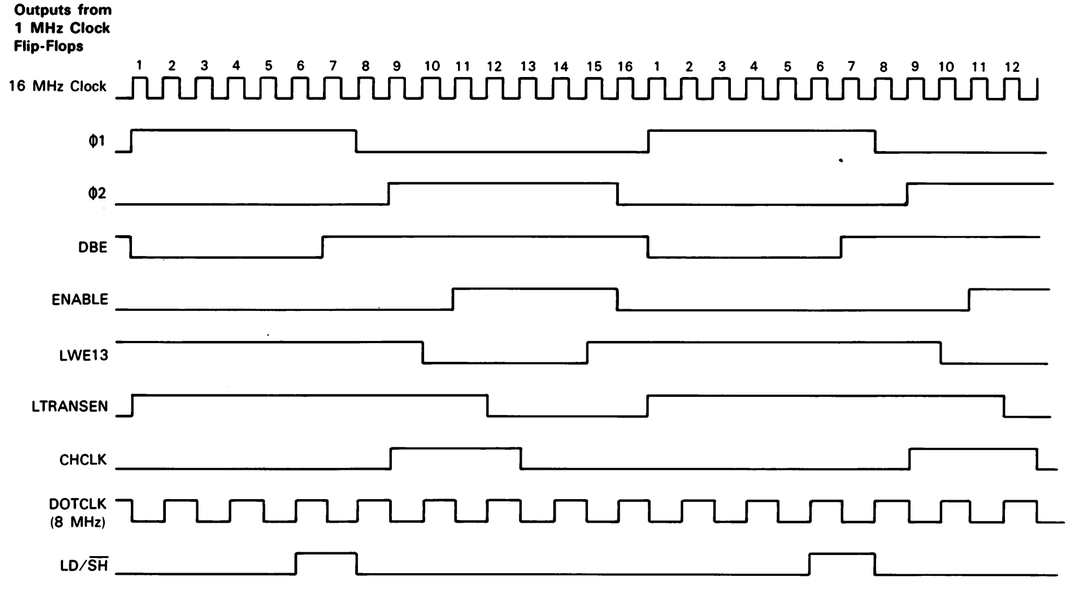

A11 System Timing

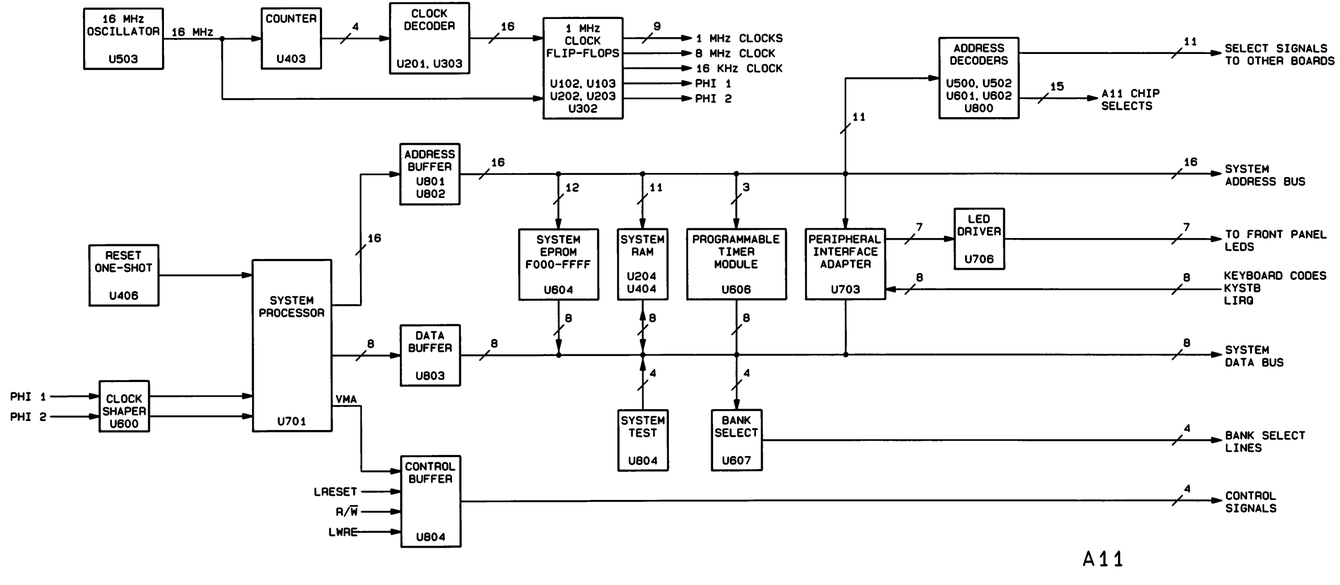

Figure 8-17. A11 System Processor Block Diagram

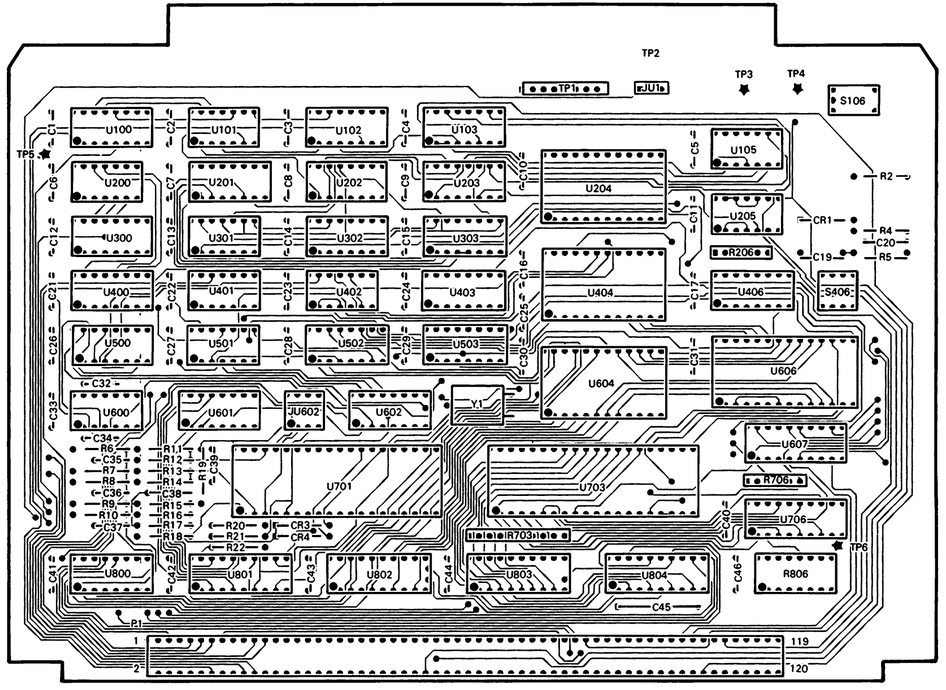

04945-60011 O-9/83 REV. A-2311

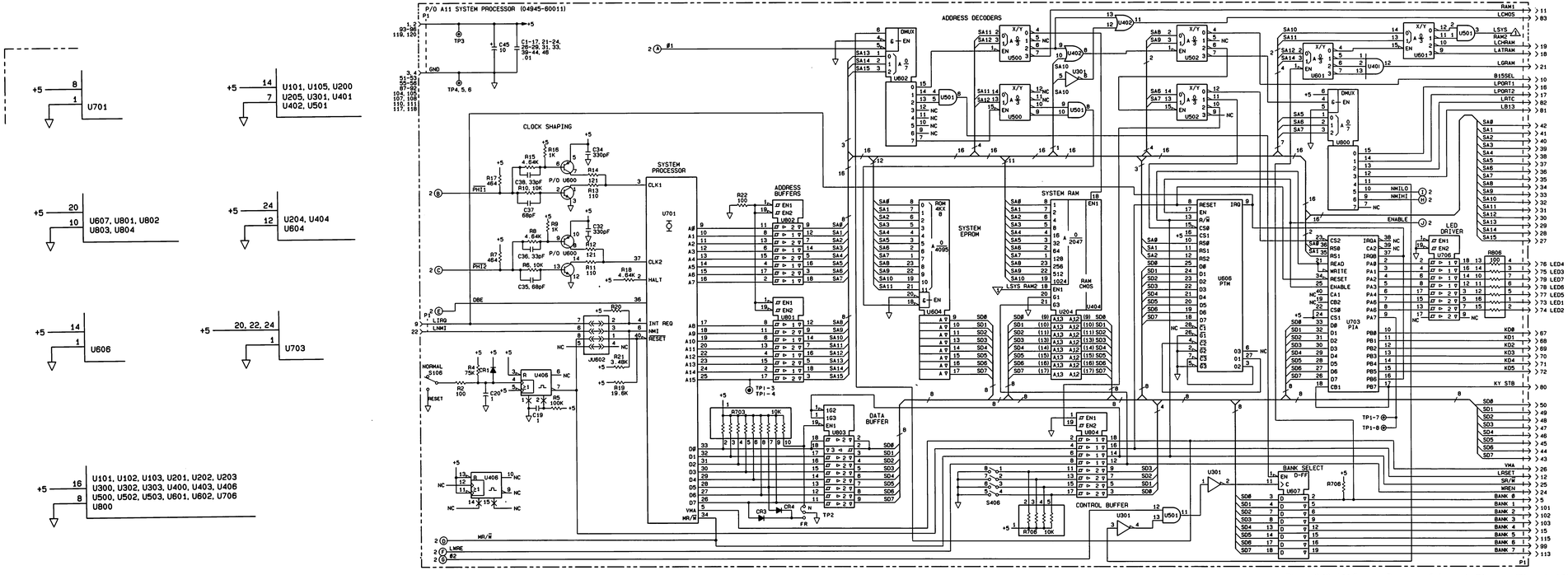

Figure 8-18. A11 System Processor Schematic Diagram (Sheet 1 of 2)

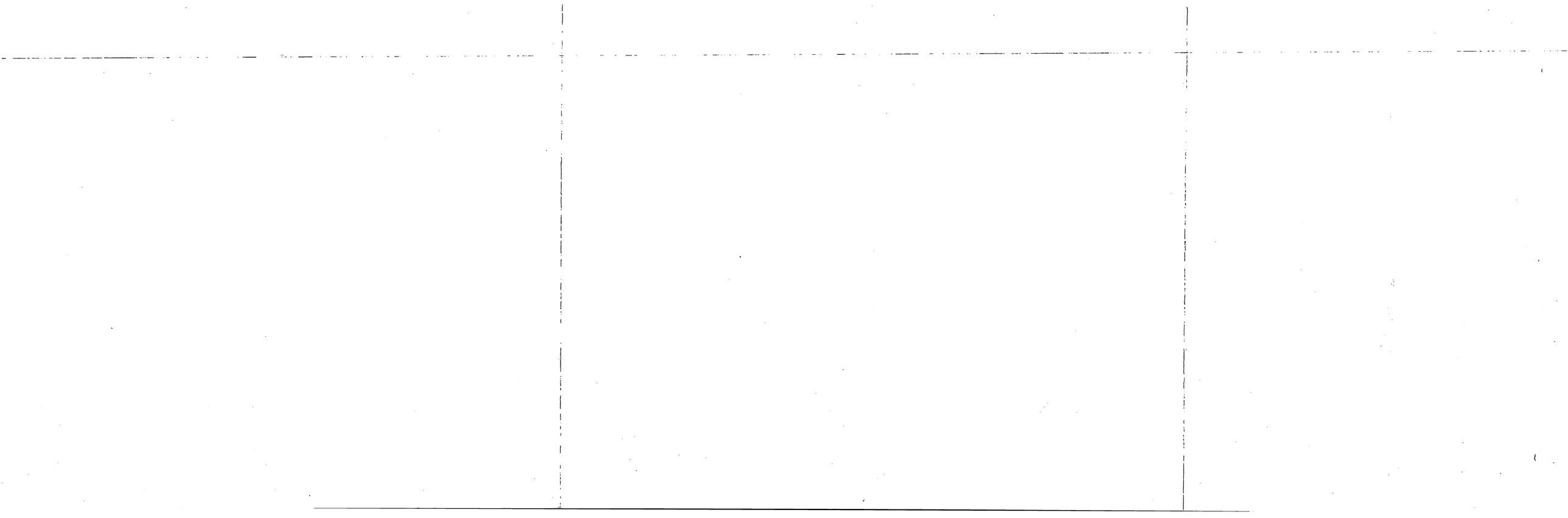

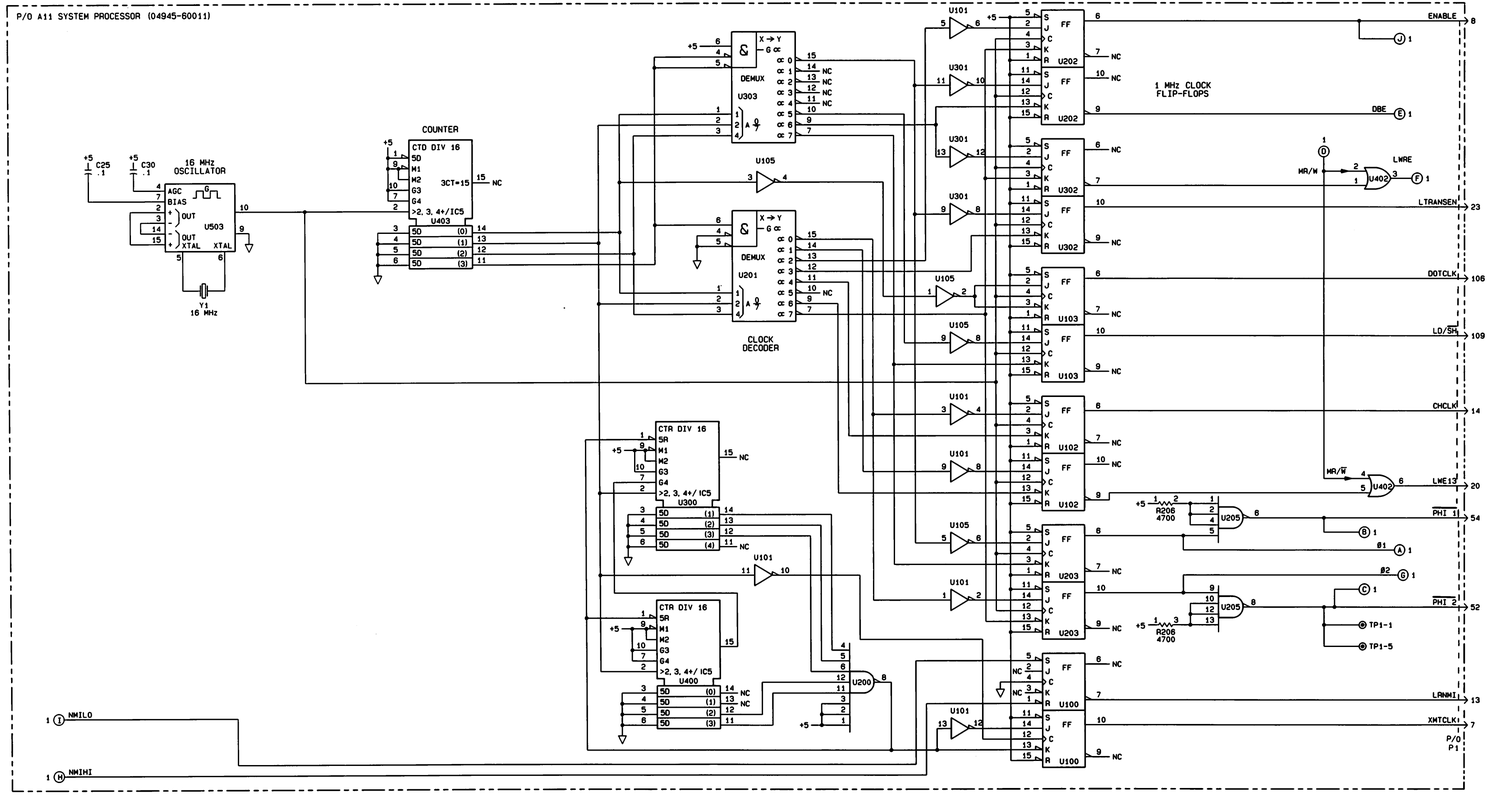

Figure 8-18. A11 System Processor Schematic Diagram (Sheet 2 of 2)

8-53. System Memory (A12)

The system memory board contains all the system program memory (except the 4 K ROM on A11), some of the system RAM, the nonvolatile memory a the realtime clock.

The address decoder performs two functions. It decodes down to chip level (chip select logic) for the program ROM (U604, U606) and the RAM on A12 and it generates a board select signal used to enable the data transceiver. Both address decoding circuits use the system PHI1 (inverted) clock to enable them. The board select is derived by gating various chip selects with an A11 clock, TRANSEN.

The address bus is buffered by U702 and U703. The data bus is buffered by transceiver U704. Several control signals and clocks are also buffered by U700.

Memory

The program ROM consists of a 32 K segment in the main memory map (U100, U200, U300 and U400) and 6 banks of 16 K bytes (U102, U104, U202, U204, U302 and U304) selectable via the bank switch on A11.

There is 6 K of static RAM located on A12. The three chips (U402, U404 and U500 are all addressed in the main segment.

The non-volatile memory consists of two, 1K x 4 static RAMs (U106, U107). This RAM stores the instrument's state so that upon power-up it reconfigures itself to the set-up it was in before power down. A power-up/down circuit prevents the RAM from being inadvertently altered during a powerup or powerdown sequence. Power is supplied by a 3.0 V lithium/ thionyl-choride battery.

NOTE: THE A12 BATTERY SHOULD BE REPLACED WHEN THE VOLTAGE GOES BELOW 2.6 VOLTS.

Each EPROM contains a 16 bit checksum in the first two bytes, an 8 bit location code in the third byte, and an 8 bit revision code in the fourth byte.

Real Time Clock

The real-time clock is single chip (U308). To read the clock, the address, chip select, and R/W (high for read) must be latched into address latch (U307). Next the RD line is strobed by addressing R/W start and then R/W end. Finally the data is read from data latch, U206. To perform a write, the address chip select, and R/W (low for write) are latched into the address latch (U307). The write data is latched into data latch, U306 and WR is strobed.

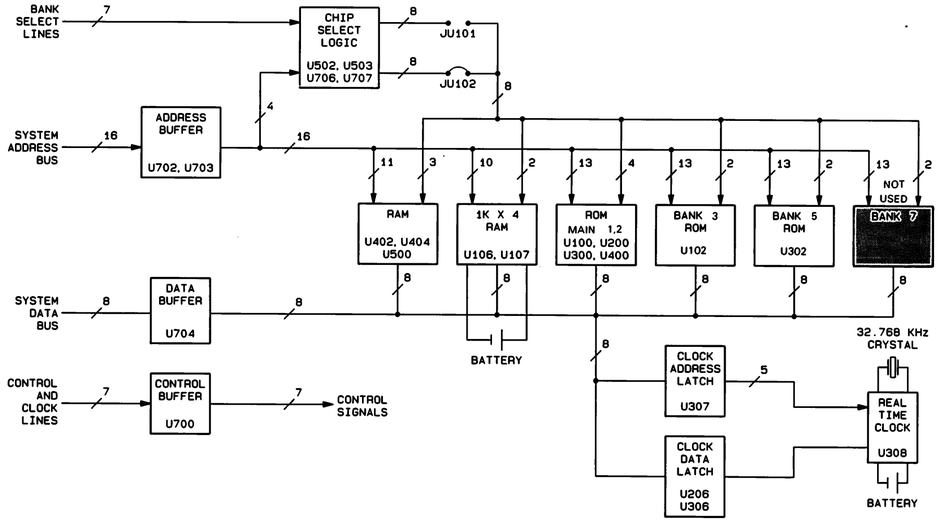

Figure 8-19. A12 System Memory Block Diagram

A12 TP2 Mnemonics

TP2-1	LRTC	- Chip select for real-time clock
TP2-2	LDTE	- A12 data transceiver enable
TP2-3	6000	- Address > or = 6000
TP2-4	CMOS	- Chip select for non-volatile Ram
TP2-5	CIRQ	- A12 Real-time clock interrupt request to A11 System Processor
TP2-6	VSTBY	- Standby voltage for A12 non-volatile Ram
TP2-7	PWDN	- Power down indicator input to A12 real-time clock

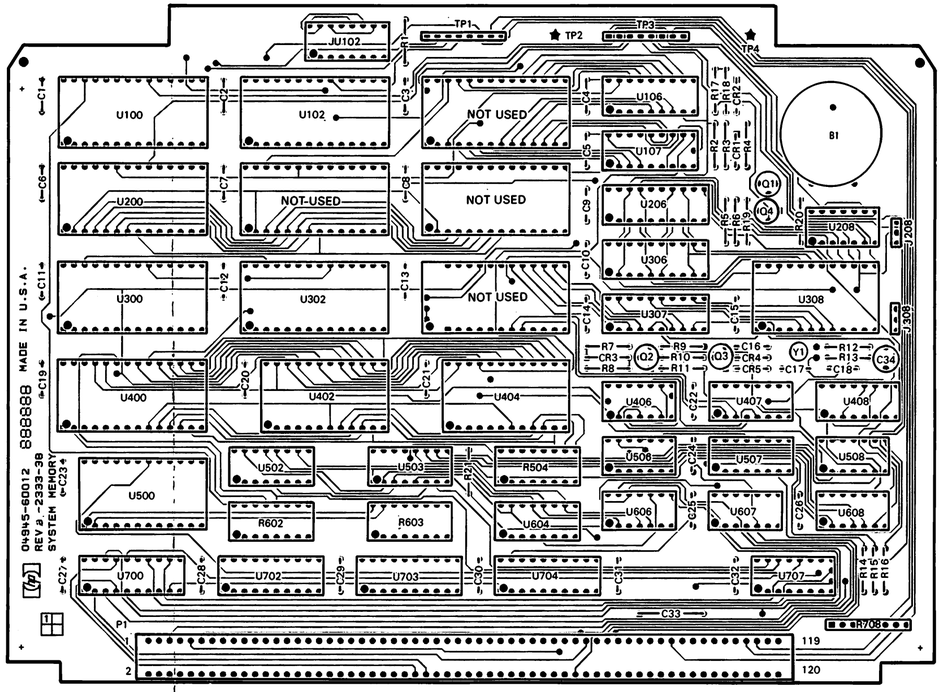

04945-60012 O-9/83 REV. A-2333

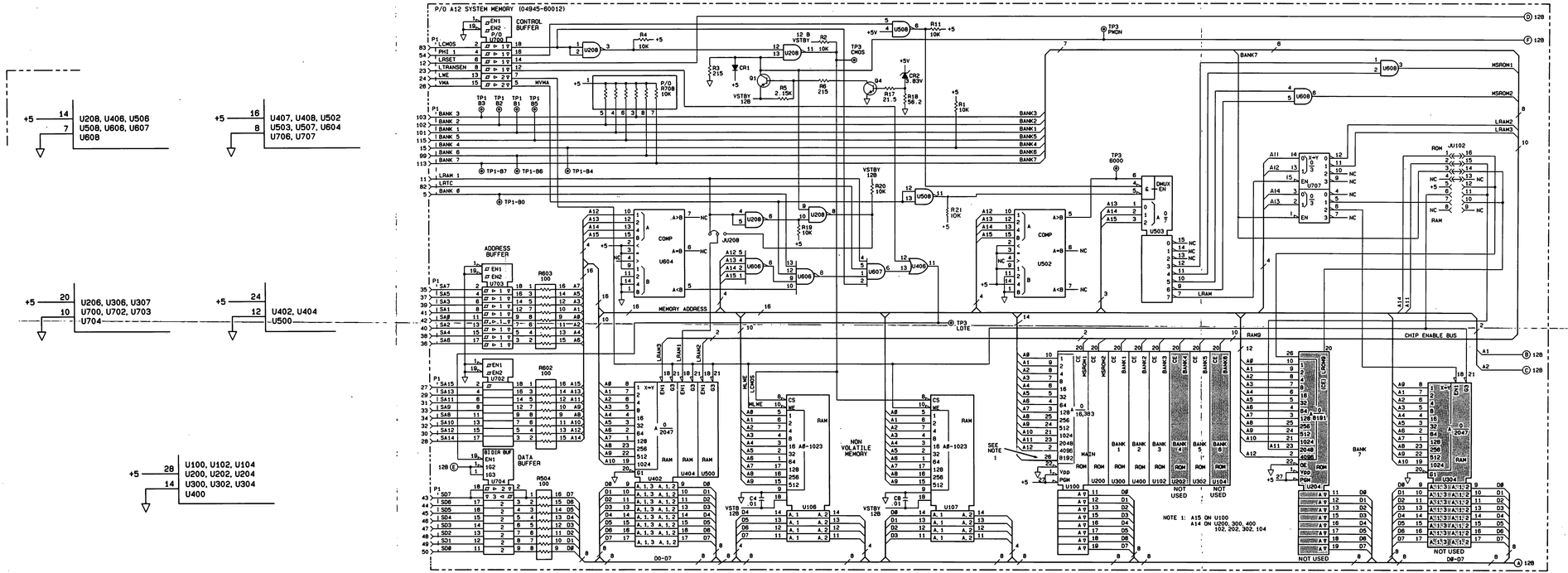

Figure 8-20. A12 System Memory Schematic Diagram (Sheet 1 of 2)

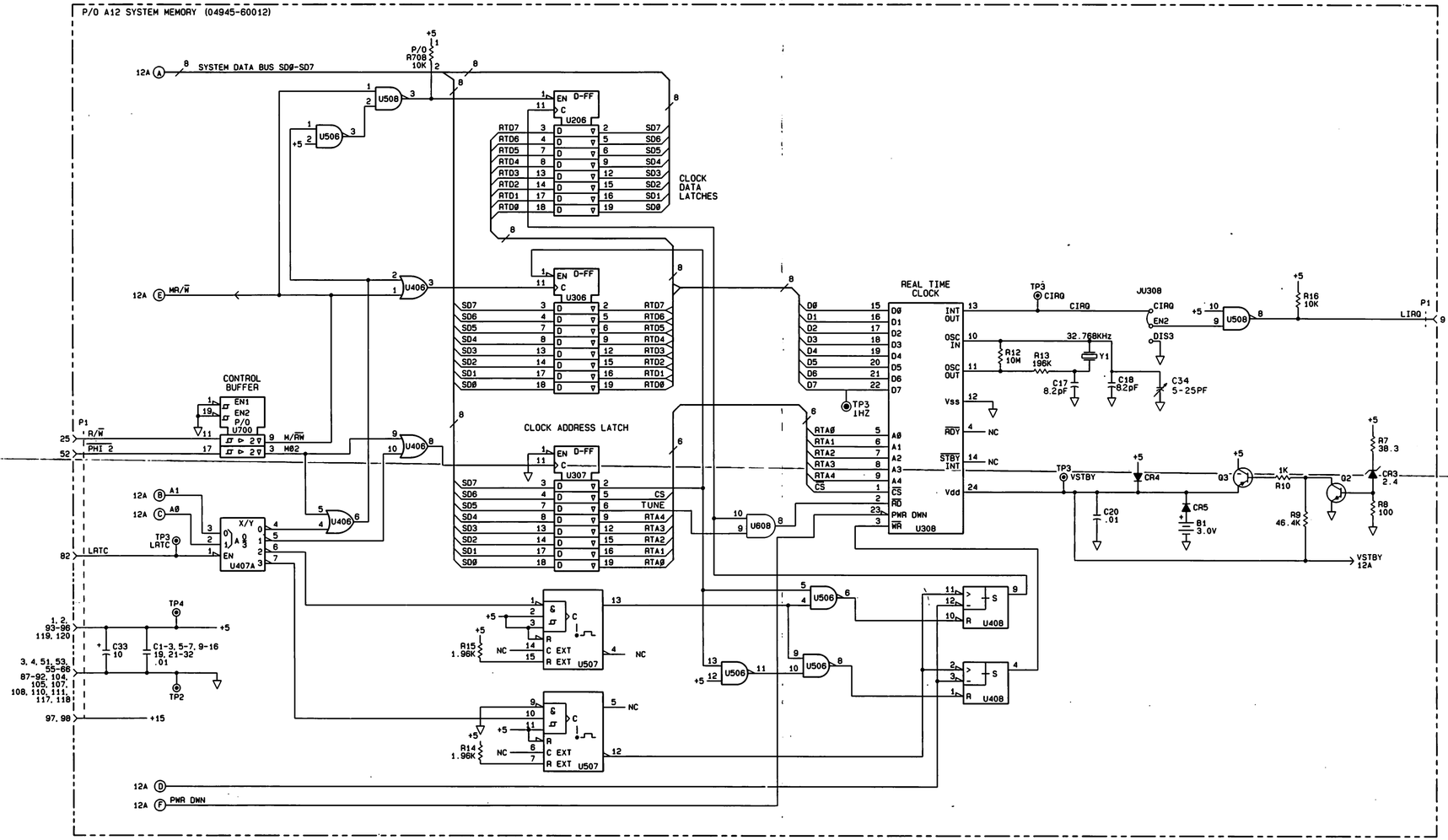

Figure 8-20. A12 System Memory Schematic Diagram (Sheet 2 of 2)

8-54. Receiver Processor (A10)

The receiver processor board controls the 4945A receiver. To make communications channel measurements, the 4945A first transmits signal over the channel and then receives and analyzes the returned signal.

The receiver processor contains the firmware used to control the receiver's analog hardware (A1 through A9) and to make all measurements on the received signals. The receiver microprocessor (U300) communicates with the other receiver boards through address and data busses which are buffered and separate from the main address and data busses on A10.

The receiver processor communicates with the system microprocessor through an area of shared read/write memory on the A10 board. Commands are passed from the system to the receiver through this memory. The shared memory is also used to send measurement data from the receiver to the system for display.

Microprocessor and Clock

The receiver microprocessor (U300) is an MC68B00. The 16 bit address bus from U300 is buffered by U203 and U403. The 8 bit data bus is driven by bidirectional buffer U200. Pull-up resistors R200 and pull-down diodes CR4 and CR5 produce a "CLR B" instruction to the microprocessor during free run signature analysis.

Clock signals PHI1 and PHI2 come from the system processor (A11). These signals are buffered and shaped by U400 and its associated descrete parts. The buffered clock signals drive the microprocessor clock inputs.

Notice that the system PHI1 becomes the receiver PHI2 and the system PHI2 becomes the receiver PHI1. This is because the system processor and the receiver processor run 180 degrees out of phase. This guarantees that both processors can not be accessing the shared memory simultaneously.

Address Decoding

Four different decoders on A10 are used to generate chip select signals.

U103 is used to generate chip selects for each of the seven EPROMs on A10. Each of these chip selects represents 8192 bytes of address space. U103 decodes address lines A13, A14 and A14.

U304 is used to generate chip selects for the three RAM chips. Each RAM chip select represents 2048 bytes of address space. U304 decodes address lines A11, A12 and A13.

U303 generates the same chip selects as U304, except that the timing is different. The only output from U303 (pin 12) drives an enable line on U102.

U102 is used to further decode the chip select (pin12) of U304 (or U303). U102 is a dual 2-to-4 line decoder. The first section generates the chip select for the driver U105, while the second produces the chip selects for both U107 (pin 11 of U102) and the buffered receiver address and data busses (pin 12 of U102).

EPROM

There are seven, 8k X 8 EPROM memory chips on A10 (U305, U306, U307, U308, U407, U507 and U607). They occupy nearly all of the available address space, from 2000H to FFFFH. Each chip stores 8192 bytes of program code.

RAM

There are three, 2k X 8 RAM memory chips on A10 (U405, U503 and U505) for a total of 6144 bytes of read/write memory. The RAMs occupy the address space from 0000H through 17FFH. Each chip provides 2048 read/write locations.

Shared RAM

One of the RAM chips, U503, is shared with the system processor, and is referred to as "shared RAM". This 2048 byte area can be accessed by either microprocessor.

The receiver data bus to U503 is buffered by U603, while the system data bus is buffered by U703. The timing is such that both drivers cannot be active simultaneously. Pull-up resistors (R603) are provided for signature analysis.

The shared memory is accessed by the system through the 8-bit address comparator U702. If the system address lines correspond with the system address of shared memory, a chip select is generated at pin 19. This chip select, besides being used to enable U703, also controls the state of digital multiplexers U202, U402, U502 and U602. U202 determines whether the receiver or the system is to drive the chip select, read/write and write/read lines of U503, while the other three are used to connect the address lines of U503 to either the system or receiver microprocessor bus.

Receiver Address and Data Busses

The six least significant receiver address lines are buffered by U605 to drive the address bus to boards A1 through A9. The receiver data bus is made available to A1 through A9 through the bidirectional buffer U705. Both busses are enabled with the chip select from pin 12 of U102. It is through U605 and U705 that A10 communicates with all of the other receiver boards.

Other signals provided to boards A1 through A9 by the receiver processor are two enable lines and a read/write line.

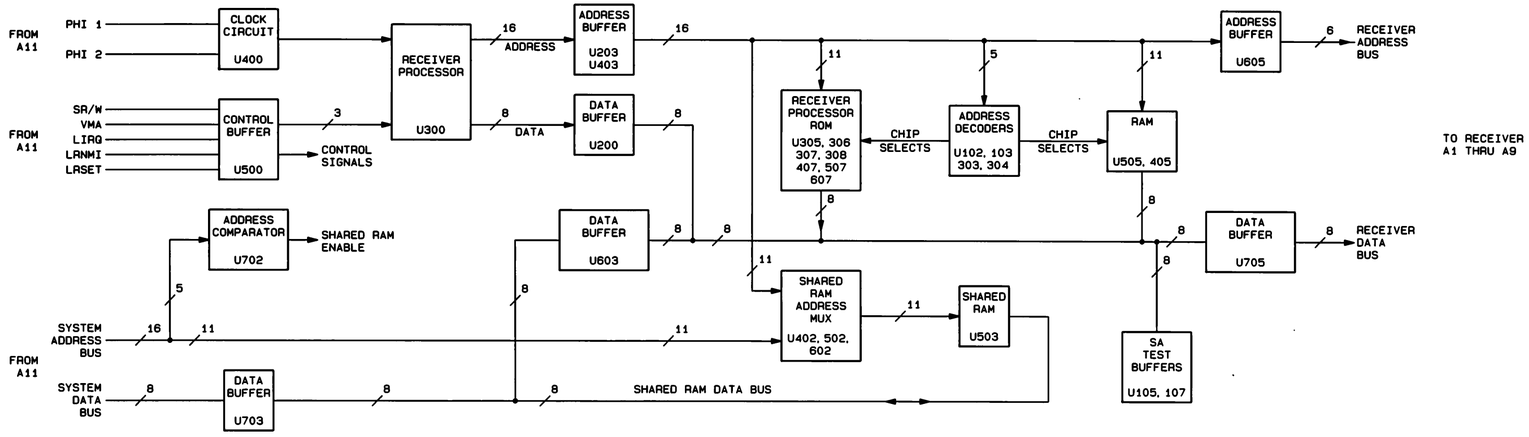

Figure 8-21. A10 Receiver Processor Block Diagram

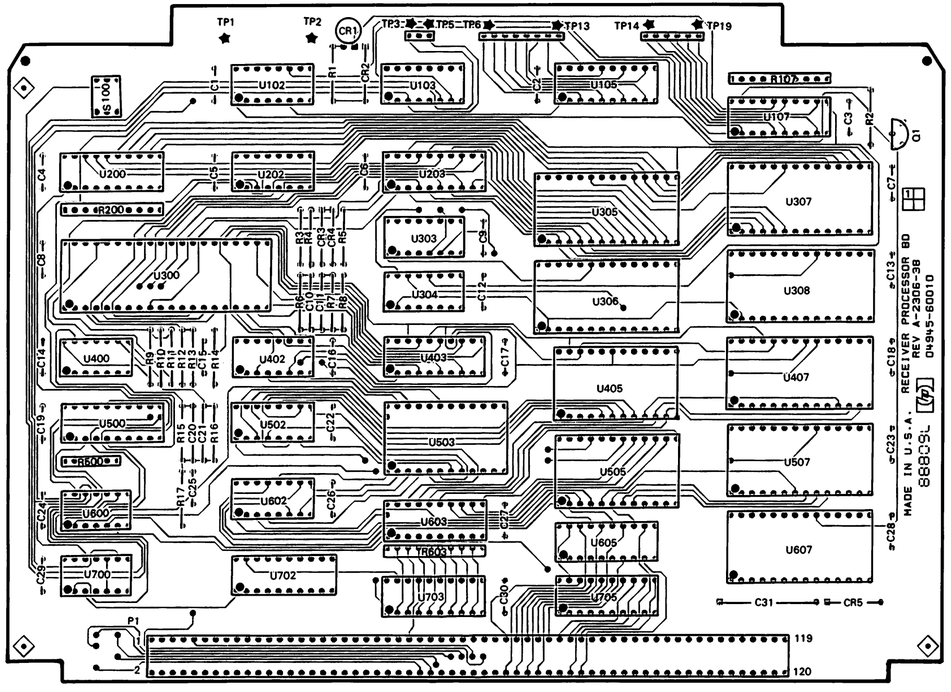

04945-60010 O-9/83 REV. A-2306

+5 — 8 — 21, 1 — U300

+5 — 10, 5 — 12, 3 — U400

+5 — 14 — 7 — U600 U700

+5 — 24 — 12 — U405 U503 U505

+5 — 16 — 8 — U102, U103, U202 U303, U304, U402 U502, U602

+5 — 28 — 14 — U305, U306, U307 U308, U407, U507 U607

+5 — 20 — 10 — U105, U107, U200 U203, U403, U500 U603, U605, U702 U703, U705

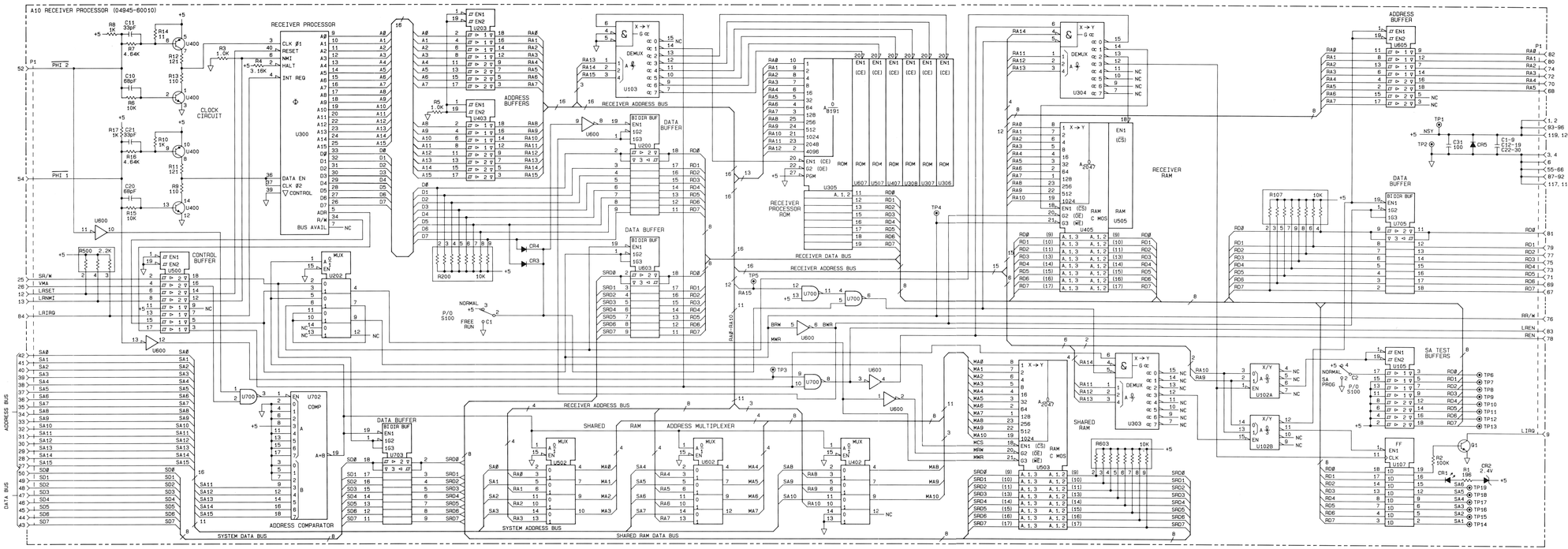

Figure 8-22. A10 Receiver Processor Schematic Diagram

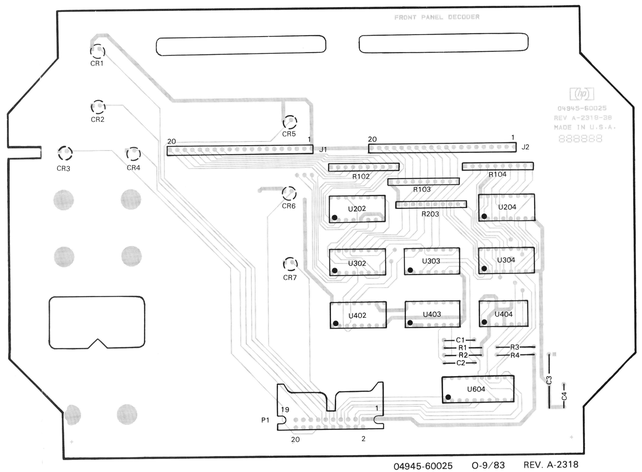

04945-60025 O-9/83 REV. A-2318

8-55. Front Panel Decoder (A25)

A25 decodes keystrokes from the keyboard and presents the decoded data to the system processor's PIA chip (A11). A keystroke pulse is generated on A25 to tell the PIA when data is ready.

A25 communicates with the system through a 20-pin flat ribbon cable to the motherboard.

The keystroke decoders consist of six priority encoder chips (U202,204,302,303,304,402). Five of these are cascaded together so that when a key is pressed (i.e. an encoder input is grounded), all other encoders are disabled causing their outputs to tri-state.

The encoder outputs are tied together to form the three lower bits of the decoded data. The pin 14 outputs (low = active) of the five encoders are inputs to a sixth encoder (U402). The outputs of this encoder form the three upper bits of the encoded data.

The timeout circuit generates the keystrobe pulse for A11 and generates a pulse to clock the data latch (U604). The GS output of the encoder chip U402 triggers a one-shot (U403) which times out for 26 msec. When that output returns high, it clocks a D flip-flop (U404) whose Q output clocks the data latch. The Q-not output triggers a second one-shot (U403) which also times out for 26 msec. The rising edge of that one-shot output clocks a second D flip-flop (U404) whose Q output is the keystrobe pulse for A11.

The data latch (U604) holds the data so that the microprocessor (via the PIA) reads valid data.

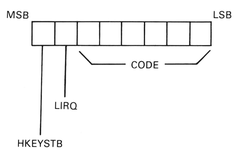

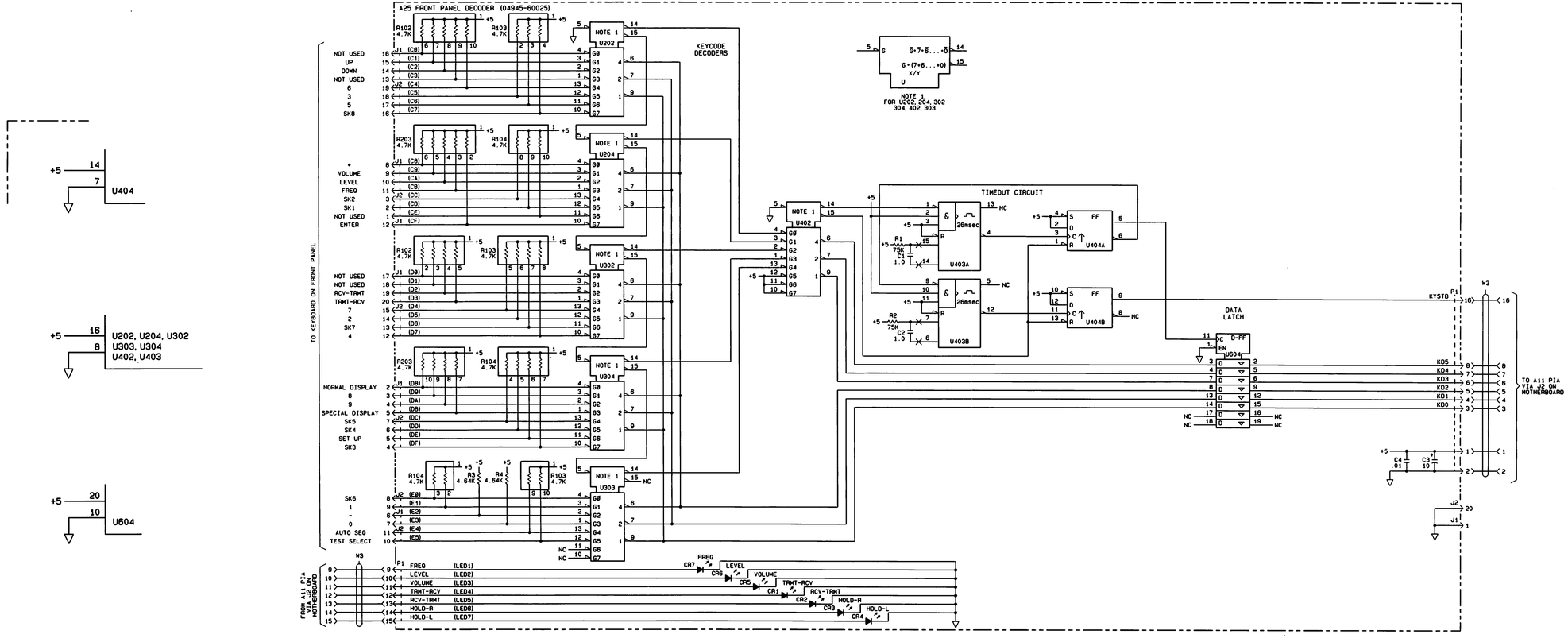

Figure 8-23. A25 Front Panel Decoder Schematic Diagram

BRYAN FIELDS, W9CR

Receiver

8-56. RECEIVER SECTION

The receiver section processes signals that return from the circuit being tested. Depending on the measurement being performed, the signal is put through various filters, amplifiers, attenuators and detectors. The measurement results are sent to the Receiver Processor.

The receiver section has the following PC assemblies.

- A1 Receiver Input (04945-60001)
- A2 Filter (04945-60002)
- A3 NLD/Modem (04945-60003)
- A4 Auto Range Amplifier (04945-60004)
- A5 Detector (04945-60005)
- A6 Jitter (04945-60006)
- A7 US Envelope Delay (04945-60007)
- A8 Frequency Counter (04945-60008)
- A9 Transients (04945-60009)

Refer to the 4945A Block diagram, the board block diagrams and the schematic diagrams when reading this section.

8-57. Receiver Input (A1)

A1 provides a balanced differential input, termination impedances, hold coil for one line, preamplification/attenuation and switching of various input signals for the receiver.

All the A1 activities are controlled by the receiver processor. The board is selected by decoding the receiver address lines through U800 and U900. Setup instructions are received on the receiver data bus and decoded into control signals by U500, U600 and U700.

The input relay selects either the tip and ring balanced input or the balanced output of the return loss bridge.

Termination impedances of 135, 600, 900, 1200 ohms or bridged can be selected. All finite impedances are dc blocked up to 150 V.

K106 is used to connect and disconnect the hold coil. Since the hold coil comes after the normal/reverse relay the receiver processor makes sure that the proper line is held. The hold coil draws approximately 22 mA dc with a battery voltage applied and provides a large ac impedance to differential signals.

The common mode signal on the tip and ring is sent through a 40 dB pad. The output is the common mode signal -40 dB. This signal is used for noise to ground measurements.

The differential input circuit converts the balanced input signal from tip and ring or the return loss bridge to a single ended signal. The FSK detectors on A3 are connected to this single ended signal.

The input signal multiplexer is used to select the appropriate input signal for the receiver. ST17 is used for A1 self-test when selected through the multiplexer. The output of the 40 dB pad is used for noise to ground measurements. The output of the differential input is used for all other measurement modes.

The attenuator provides 0 dB, -20 dB or -40 dB attenuation. It is used to adjust the received signal level for optimal receiver operation.

The preamplifier/ gain adjust circuit buffers the A1 output signal and also provides 20 dB gain. A gain adjustment is used to adjust the absolute gain of the A1 board. Typical gain errors are approximately .3 dB.

The A1 outputs are the SIGNL line which goes to A2 and the FSK SIGNL line which goes to A3.

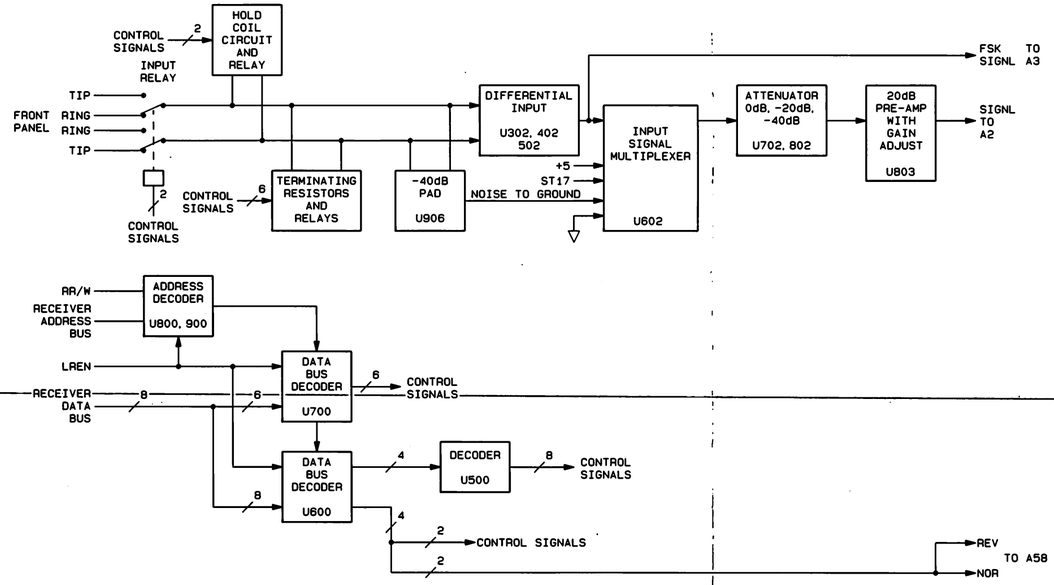

Figure 8-24. A1 Receiver Input Block Diagram

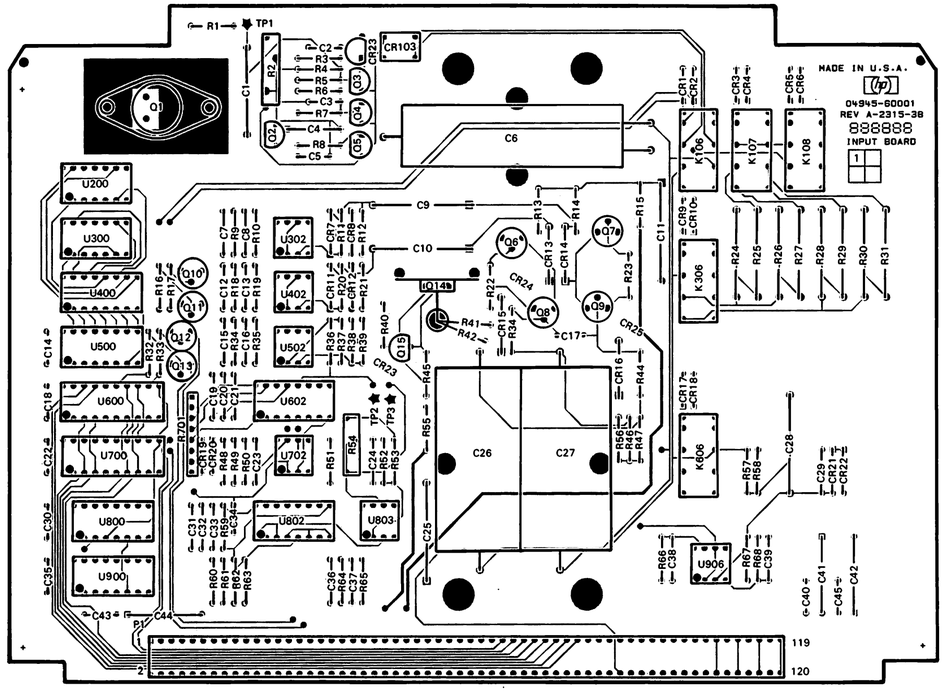

04945-60001 O-9/83 REV. A-2315

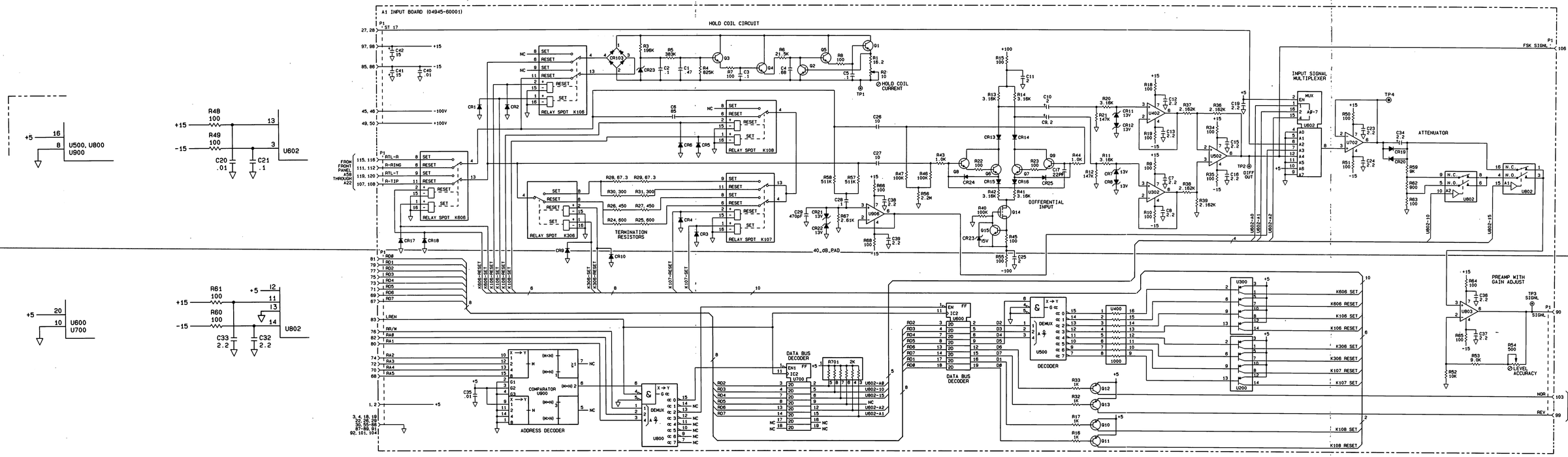

Figure 8-25. A1 Receiver Input Schematic Diagram

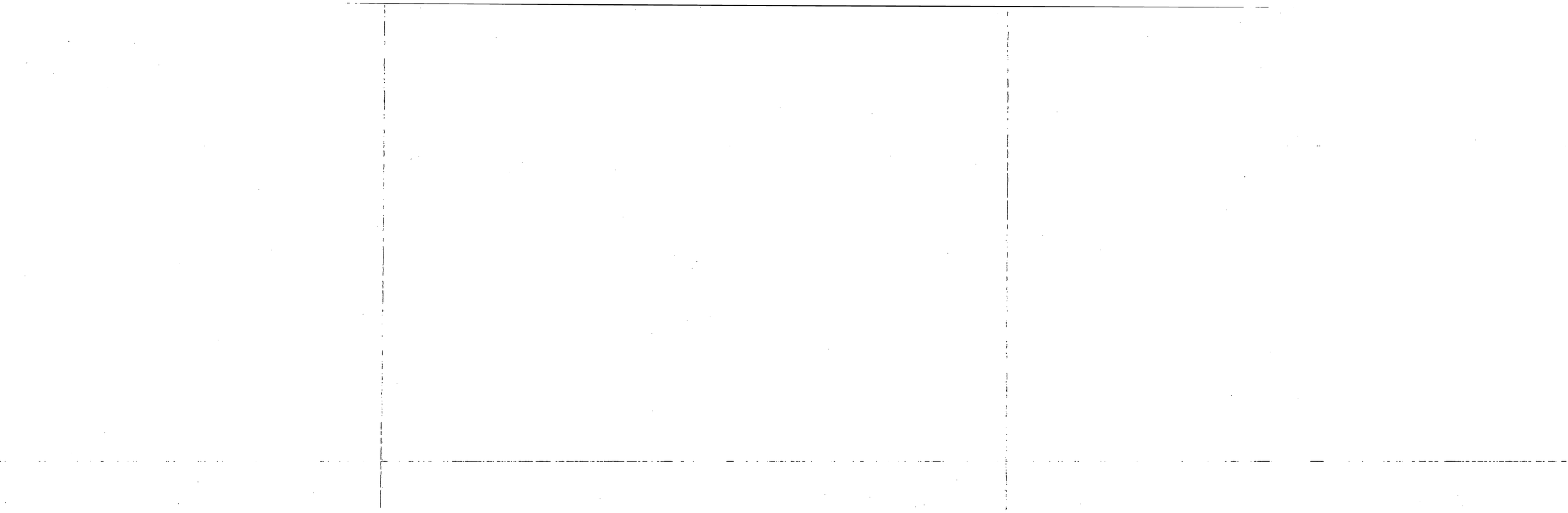

8-58. Filter Board (A2)

The filter board consists of two front-end noise filters, six message weighting filters, a holding tone notch filter, a bandlimiting filter for phase jitter, a 10 dB amplifier/AM filter, and appropriate switching and buffering. The inputs to A2 are the self test signal from A17 and the output of A1. The A2 outputs are; the narrowband channel, the wideband channel, the phase jitter output, the IMD output, and the output of the 60 Hz highpass filter.

The filters and inputs to A2 are selected by analog switches. All switches are dual SPDT except the analog multiplexer (U405), which chooses the weighting filter. The switches are controlled by the receiver microprocessor on A10 via the octal latch, U705.

There are two, front-end noise filters on A2 which are independently selectable; the 60 Hz high-pass and the 10 kHz lowpass filters. The 10 kHz low-pass is used when the voice band limit is activated from the front panel. The 60 Hz lowpass is directly selectable from the front panel during level/frequency and gain-slope measurements.

Another band-limiting filter is the combination 10 dB amplifier/AM filter. This path is selected when the input signal is less than -40 dBm. The AM filter is a 278 kHz lowpass filter with a DC gain of 10 dB. It boosts the signal in addition to the 60 dB gain available on A4 and reduces interference from strong AM radio signals.

In some measurements it is necessary to notch out the holding tone. The 1010 Hz notch filter is used for this purpose. It is a stagger-tuned bandstop filter which consists of three, 2nd order stages, each is individually tunable. The first stage has a null at 995 Hz, the second has a null at 1010 Hz and the third has a null at 1025 Hz.

The phase jitter filter is a band-pass filter used to bandlimit the test signal to a bandwidth of about 600 Hz centered about 1 kHz. The most common contributors to phase jitter usually cause only narrowband phase modulation so only one pair of significant sidebands are produced for each sinusoidal component (the highest frequency is 300 Hz).

Any one of eight signals can be selected by the analog multiplexer, U405. Six of the choices are weighting filters for noise measurements; 3 KHz flat, 15 KHz flat, program, 50 kbit, CMsg and the P/AR bandpass filter. The seventh choice is no weighting. The last choice is a grounded input (to the wideband channel buffer amplifier) which is selected when the wideband channel is not being used for a measurement. The 3 kHz and 15 kHz flat filters are both 2nd order, Butterworth low-pass filters. The program, 50- kbit and the C-Msg filters are multi-stage bandpass filters. The P/AR filter is a cascade of two identical 1300 Hz, 2nd order bandpass filters.

There are several buffer amplifiers located throughout the board. These amplifiers buffer the signal after it has passed through one or two switches because the switches have a non-zero "on" resistance which adds up and causes a significant loss through the channel. They also buffer signals that go to other boards.

Following is more detailed information about the A2 filters.

Filter Notes

In the block diagrams, the frequency listed for LPF and HPF is the 3 dB frequency.

The two frequencys listed for BPF and NOTCH are the mid-band freq. and bandwidth.

In the tables, these notations are used:

FC1	The lower 3 dB freq. for BPF and NOTCH The 3 dB freq. for LPF and HPF
FC2	The upper 3 dB freq. for BPF and NOTCH Does not apply to LPF and HPF
FM	The mid-band freq for BPF The freq. of null for NOTCH Does not apply to LPF and HPF
BW	The 3 dB bandwidth: =FC2-FC1 for BPF & NOTCH =FC1 for LPF and HPF
Q	For 2nd order sections only
K0	Dc gain for LPF

C-MSG FILTER

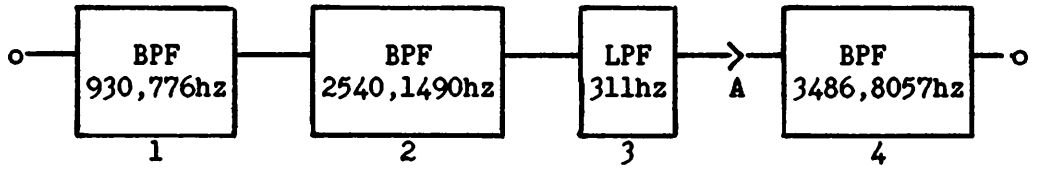

Stage	FC1	FC2	FM	BW	Q
1	621	1397	932	776	1.2
2	1902	3392	2540	1490	1.7
3	311	na	na	311	.66
4	1299	9355	3486	8057	2.7

PHASE JITTER FILTER

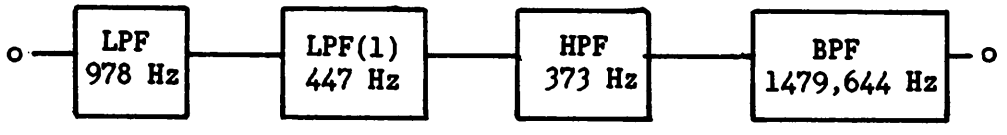

Stage	FC1	FC2	FM	BW	Q
1	978	na	na	978	.63
2	447	na	na	447	na
3	373	na	na	373	1.1
4	1192	1835	1479	644	2.3

50 KBIT FILTER

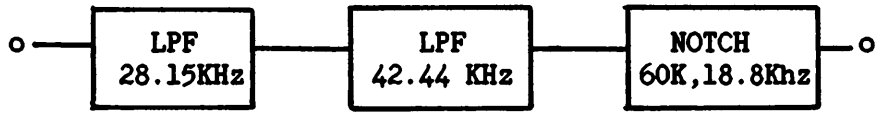

Stage	FC1	FC2	FM	BW	Q
1	28.15K	na	na	28.15K	.62
2	42.44K	na	na	42.44K	.707
3	33.09K	51.85K	60.74K	18.76K	2.2

PROGRAM FILTER

Stage	FC1	FC2	FM	BW	Q
1	7.70K	na	na	7.70K	2.0
2	7.56K	na	na	7.56K	.707
3	7.44K	na	na	7.44K	.51
4	2.12K	na	na	2.12K	na
5	262	na	na	262	na

1010 HZ NOTCH FOR HOLDING TONE

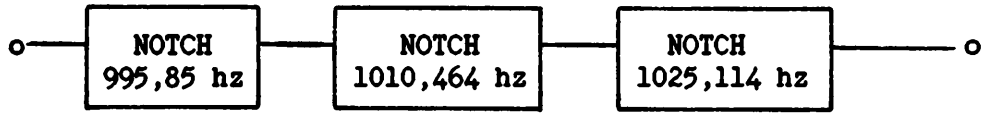

Stage	FC1	FC2	FM	BW	Q
1	953	1038.6	995	85.4	10.3
2	804.5	1268.1	1010	463.6	2.18
3	969.8	1083.3	1025	113.5	10.3

P/AR FILTER

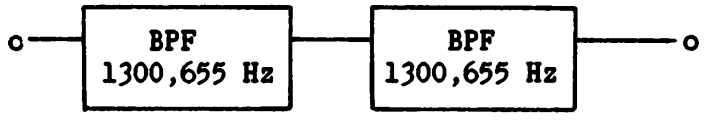

Stage	FC1	FC2	FM	BW	Q
1	1013.1	1668.1	1300	655	1.99
2	1013.1	1668.1	1300	655	1.99

60 HZ HIGH-PASS FILTER

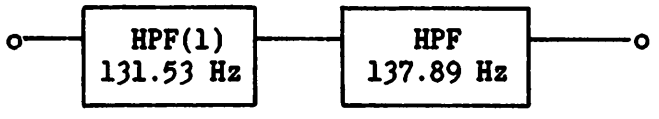

Stage	FC1	FC2	FM	Q
1	131.53	na	na	na
2	137.89	na	na	1.03

SINGLE STAGE LOW-PASS FILTERS

Filter	FC1	Q	K0
3 kHz Flat	3.00K	.707	1.00
15 kHz Flat	15.15K	.707	1.00
10 kHz LPF	10.00K	.728	1.00
10 dB AMP/AM filter	278.3K	.633	3.16

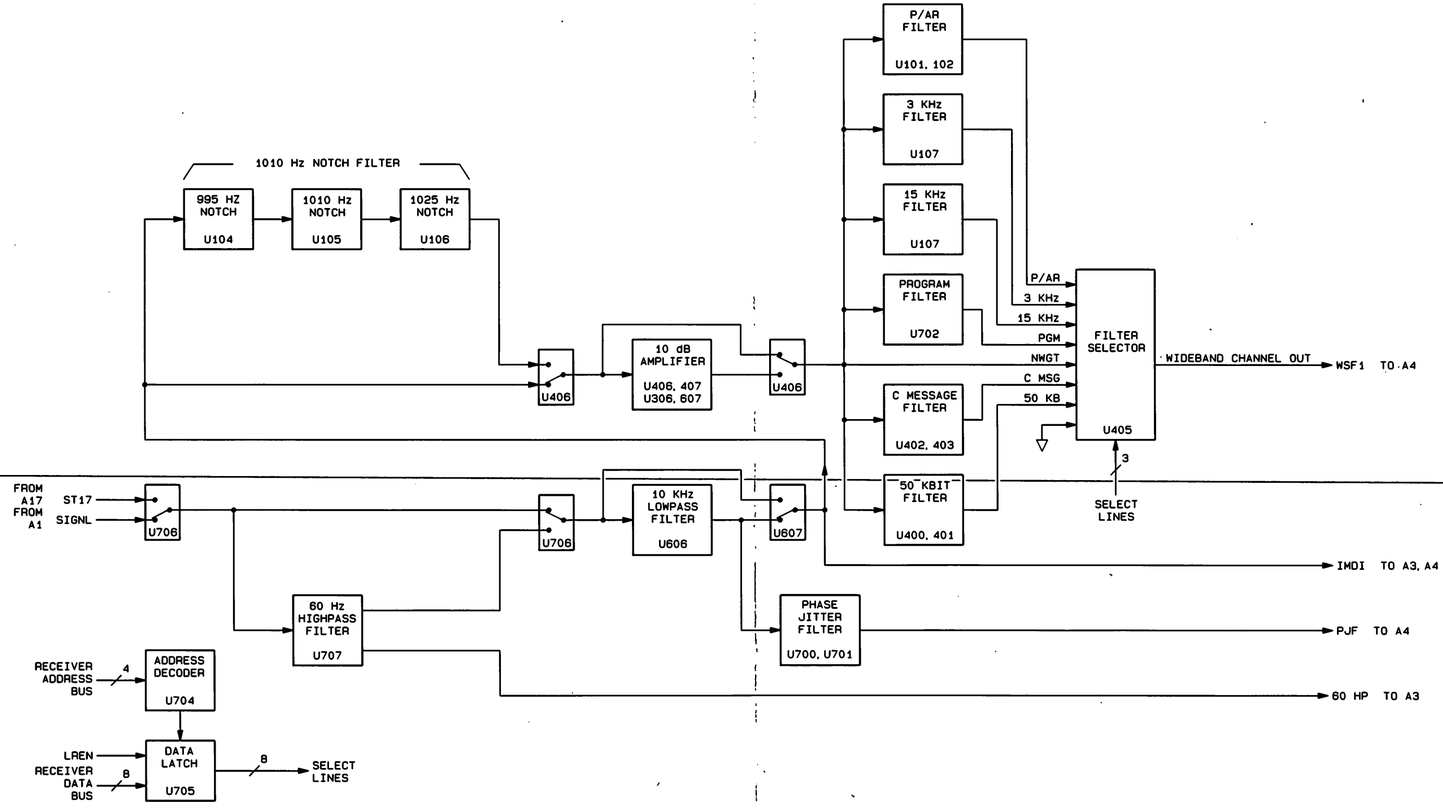

Figure 8-26. A2 Filter Board Block Diagram

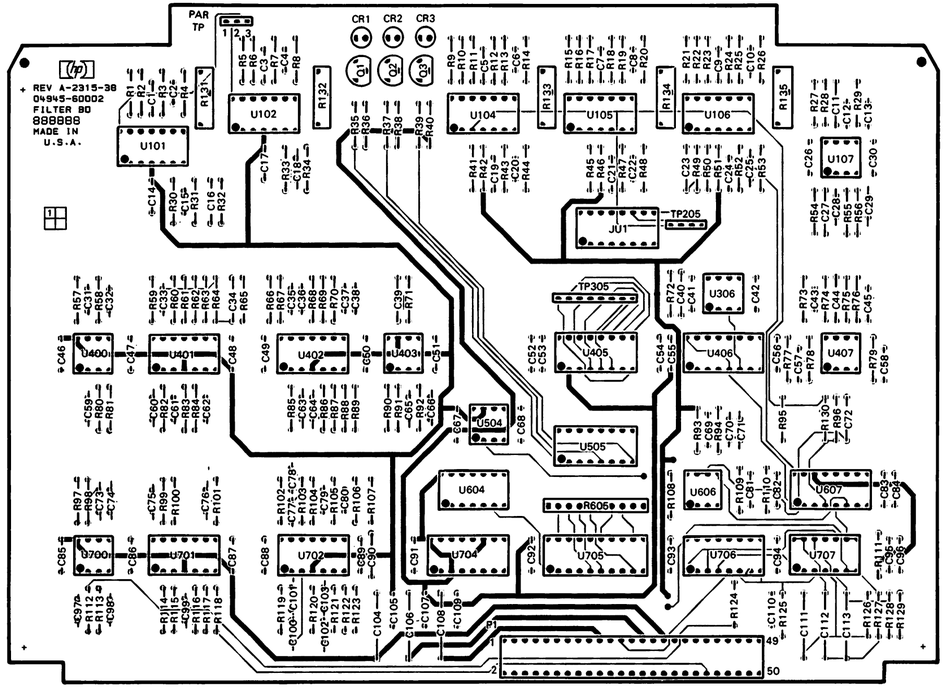

04945-60002 0-9/83 REV. A-2315

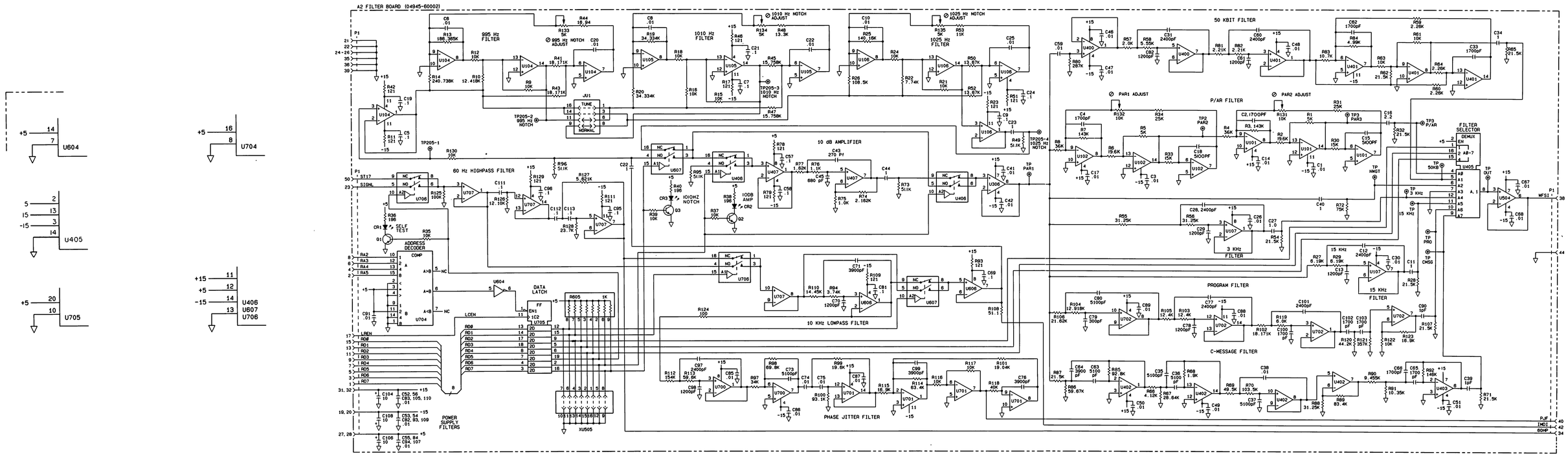

Figure 8-27. A2 Filter Board Schematic Diagram

8-59. NLD/Modem (A3)

There are two separate sections on this board. One section is used for NonLinear Distortion detection and the other is used to detect and demodulate an FSK signal.

NLD Section

The input to the NLD section (IMDI) is two tone pairs centered at 860 Hz and 1380 Hz. The 860 Hz pair is separated by 6 Hz and the 1380 Hz pair is separated by 16 Hz. So you have 857 Hz and 863 Hz as one pair and 1372 Hz and 1388 Hz as the other pair.

The NLD detection circuit is looking for the second and third harmonic distortion products of the two tone pairs.

The two tone pairs come from the 10 kHz low pass filter on A2. They are applied to notch filters centered at 860 Hz and 1380 Hz (U504 and U505). The notch filters attenuate the tone pair fundamentals at least 30 dB.

The resulting signal then goes to a 30 dB amplifier (607 and U608) . This amplifier can be bypassed.

The tone pairs also go to two tone detectors (U100 and U302). These detect whether the input signal is an IMD signal or a check signal. This information is fed back to the receiver processor through latch U700. If only one tone pair is detected, its a check signal. If both tone pairs are detected then its an IMD signal.

The anti-aliasing filter is two low pass filter sections (one at 1.5 kHz and the other at 2.44 kHz) and two switchable notch filters at 2940 Hz and 3280 Hz. These filters eliminate the undesired frequencies that might appear in the passband after the mixer. The notch filter selected depends on the frequency from the Mixing Frequency Generator (either 2420 Hz, 2760 Hz or 0 Hz). The mixing frequency is selected through the receiver data bus.

From the mixer, the distortion signal goes to a four-stage bandpass filter and then to the wideband autorange amplifier on A4 where the rms detector is used to measure the distortion level.

Modem Section

The modem section detects and demodulates the FSK signal. The input signal (FSK SIGNL) comes from the differential amplifier on A1. An AGC circuit (U300 and VR1) boosts the level of the FSK signal. The 1kHz bandpass filter (U201) eliminates noise from the two FSK tones. After filtering, the FSK detector/demodulator (U402) decodes the FSK code into digital signals. A 1990 Hz tone detector (U101) is used to detect the pilot tone.

When the FSK tones are present and the 1990 Hz pilot tone is present, then the FSK detect signal is enabled (FSKS). The demodulated FSK signal (FSKD) goes to A14.

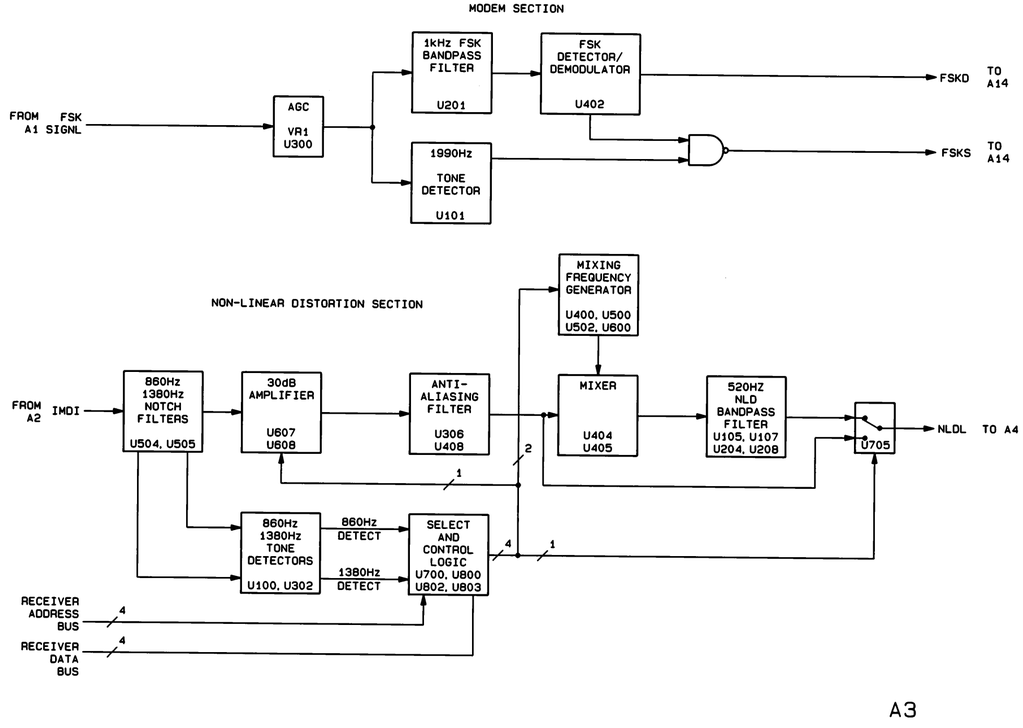

Figure 8-28. A3 NLD/Modem Board Block Diagram

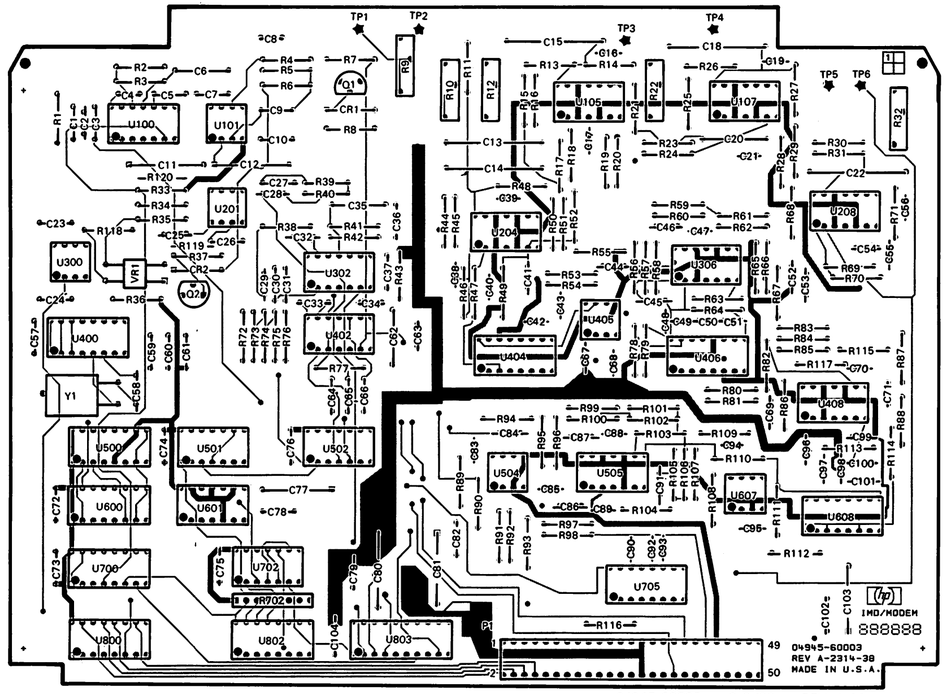

04945-60003 O-9/83 REV. A-2314

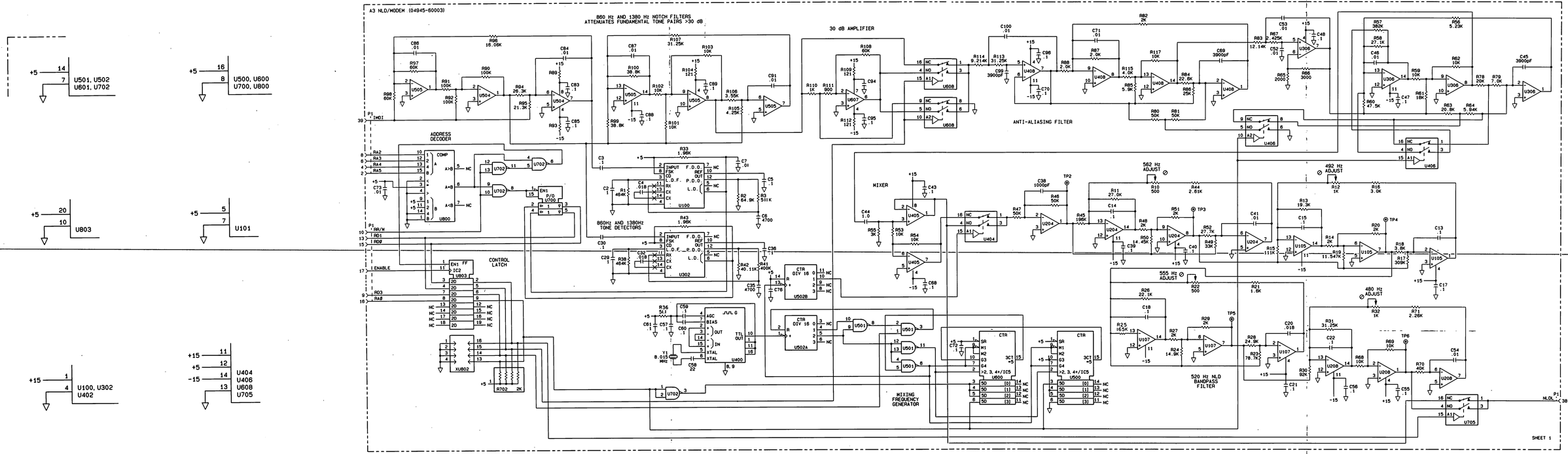

Figure 8-29. A3 NLD/Modem Schematic Diagram (Sheet 1 of 2)

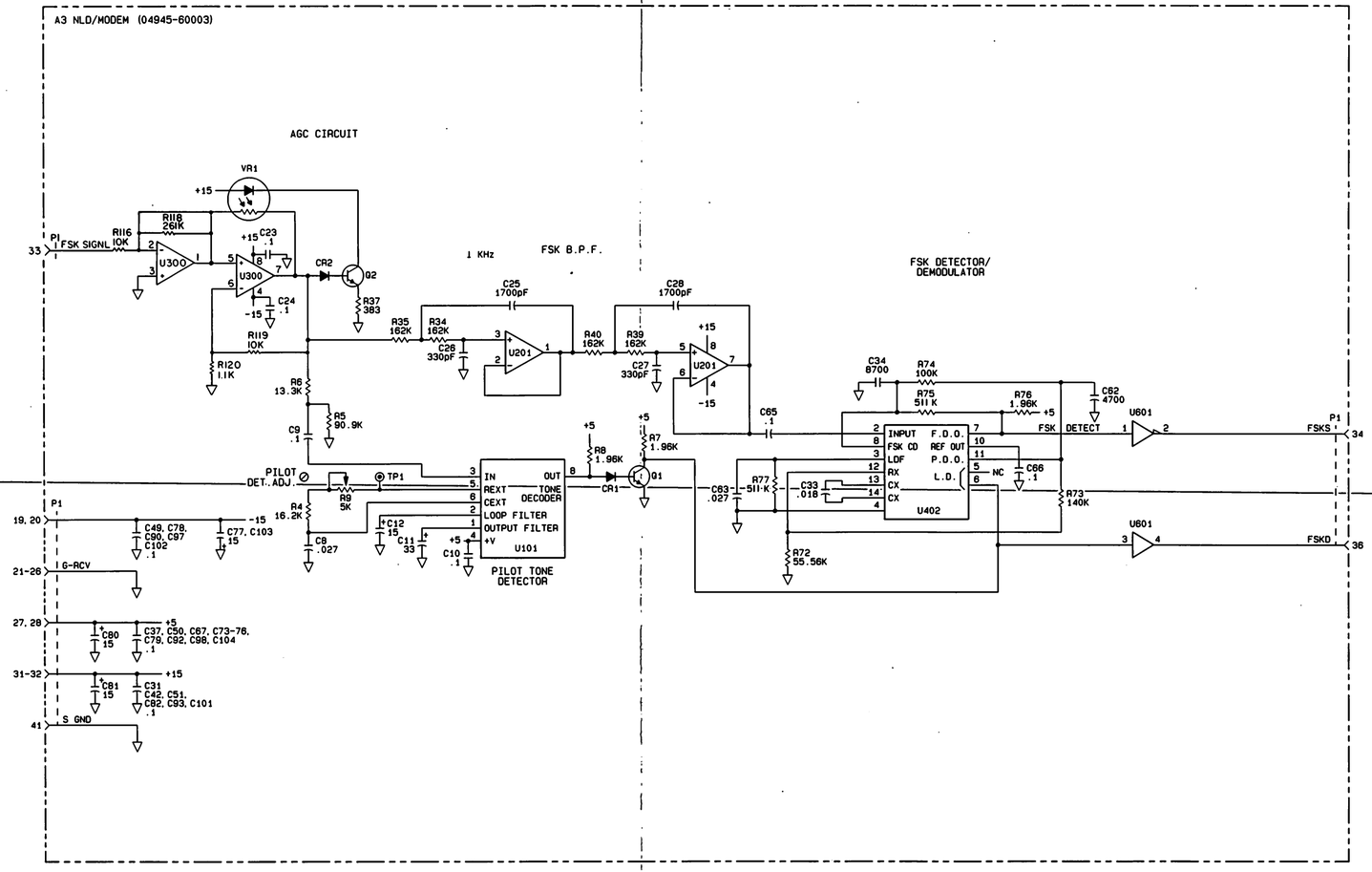

Figure 8-29. A3 NLD/Modem Schematic Diagram (Sheet 2 of 2)

8-60. Autorange Amplifier (A4)

The autorange amplifier board has two variable gain amplifiers (wideband and narrowband) which bring the signal level to a range where the detectors and other signal processing circuits can function accurately. The gain of each autorange amplifier is adjustable in 10dB increments over a range of -10dB to +60dB gain. Multiplexers (U804 and U806) at the inputs of the board switch various filters and self-check signals into the amplifiers. In the narrowband amplfier, there is a programmable fine attenuator (U102, U104) which is used for a fine adjust of the output level for that amplifier.

The two amplfiers on the A4 board are the wideband autorange amplifier intended for operation over the entire frequency range of the instrument, and the narrowband autorange amplifier only for voice band (less than 10 kHz) frequencies. A programmable fine attenuator is used for precisely controlling the level into some of the signal processing circuits. A 140 kHz low pass filter (the wideband filter) is used for limiting the bandwidth to the frequency measuring circuits and the detectors. The board also has data latches (U202, U302 and U402), control latches (U502 and U603), and address decoding circuits (U702 and U802).

Autorange Control

Software routines are used to adjust the gain of the autorange amplifier so that the signal is amplified to the proper level for the measurement circuits. The autorange routine has several modes of operation, each of which is intended for a class of possible input signal types.

The autorange routine adjusts the amplifier gains so that the rms, average or peak value of the input signal is within a specified voltage range. The routine determines whether the gain is correct or needs to be adjusted higher or lower, and it senses overrange and underrange conditions at the analog to digital converter.

There are several software tables which contain information on how the software drives the hardware.

Normal Operation

When the autorange routine is called, the full wave average wideband detector, ranging on detector outputs, tracking adc mode, and detector settling time are all set for manual operation. The initial gain of the wideband channel is 0 dB. The following sequence occurs.

1. The autorange routine waits for the detector output to settle to an accuracy suitable for ranging. The wait time is in a software table.

2. The analog to digital converter is read and compared with the detector limits for overrange, underrange or in range conditions. The detector limits are stored in a table.

3. Initially the input signal level is -10 dB at 600 ohms. Since this is not in the detector output voltage range, the autorange routine increases the gain of the autorange amplifier to +10 dB.

4. After the signal is amplified to the appropriate range, the level is read. Then the autorange routine calculates the time difference between the detector level measurement settling time and the detector ranging settling time. The routine waits this additional time so the analog detector circuit can settle to the necessary accuracy.

5. The output of the tracking adc is measured a number of times and summed. The sum is divided by the number of samples producing an average of the analog to digital converter readings.

P/AR Mode Operation

In this mode, the signal is ranged on the peak value. Then the average and rms values are measured without ranging.

When the autorange routine is called, the detector is set to the narrowband rectified path and detector control is set to peak detect. This implements a peak detector that uses the narrowband detector circuit. The detector settling time is set for manual operation and the ranging control is set for peak ranging.

1. The autorange routine enters the peak ranging mode. In this mode, the analog to digital converter circuit acts as a voltage threshold detector and the detector circuits are used as full wave rectifiers with no filtering. Thus, the peak waveform voltages are present at the analog to digital circuit.

2. Next the routine determines if the detector signal is within the correct voltage range.

The A to D converter circuit voltage threshold is set to be at the top of the detector output voltage range. The A to D circuit is then programmed to act as a peak detector, so that if the input signal goes higher than the preset voltage value, the A to D follows it. The processor continually checks the A to D value.

The peak value and the preset value is compared and the gain of the autorange amplifier is set accordingly until the proper gain is determined.

3. A sine wave input signal with a level of -10 dBm at 600 ohms is below the detector output range. A gain of 20 dB is needed to make the signal's peak value fall within the detector autorange window.

4. When the signal is within the appropriate range, the routine waits to allow the peak detector to converge on the true peak value. During the wait time, the processor is still checking for overrange conditions. If there is no overrange, the peak detector value is read and passed on to the processor.

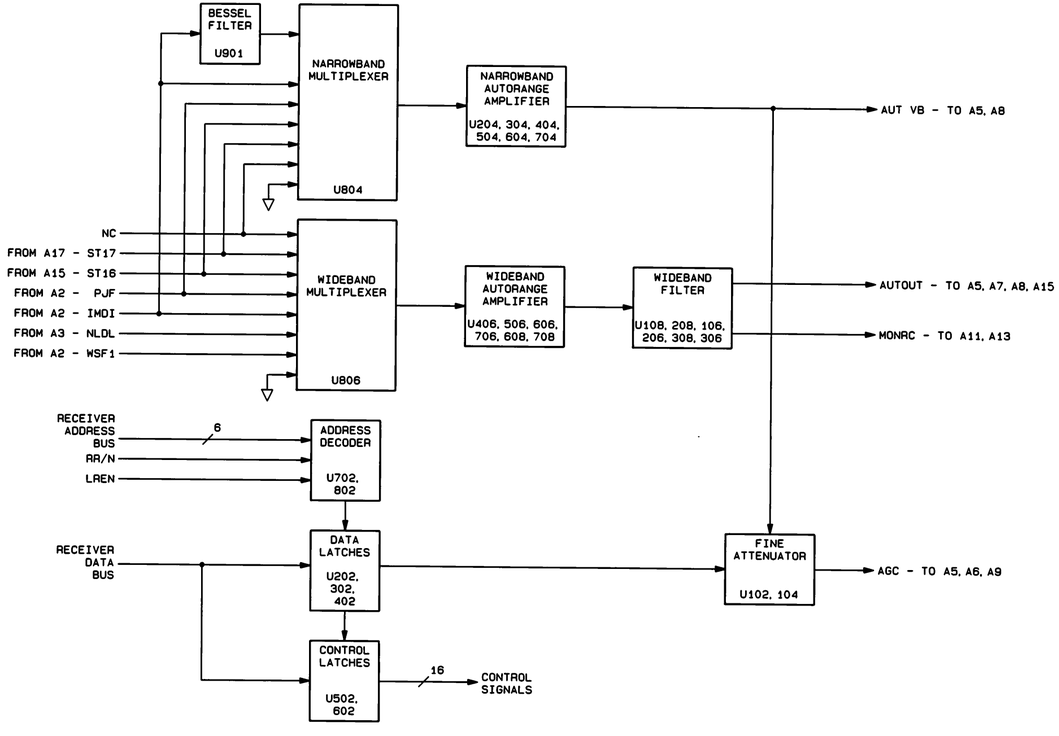

Figure 8-30. A4 Autorange Amplifier Block Diagram

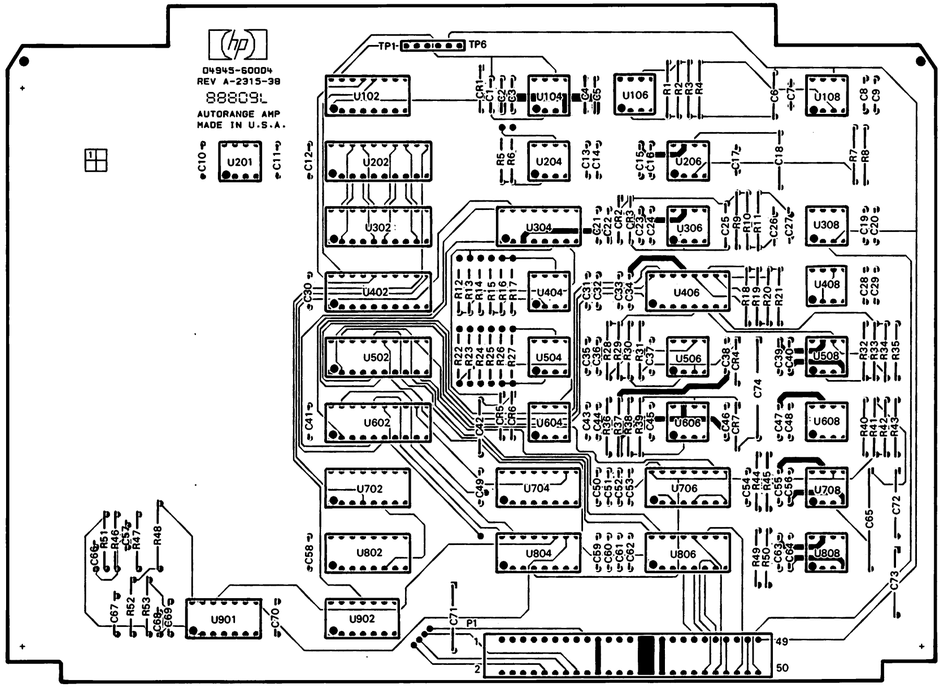

04945-60004 O-9/83 REV. A-2315

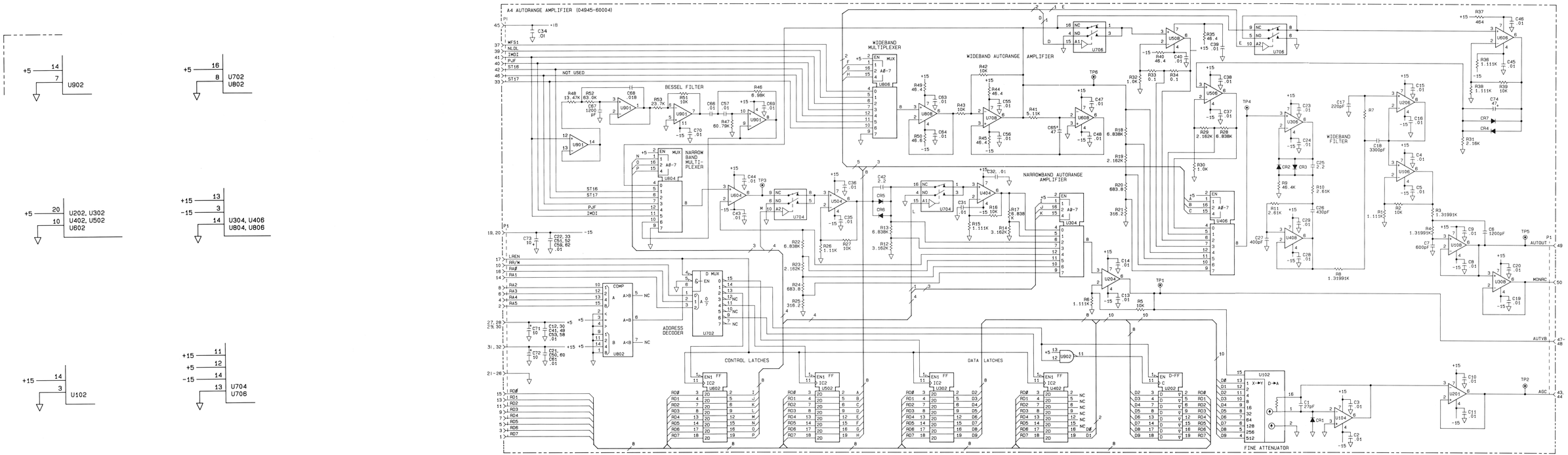

Figure 8-31. A4 Autorange Amplifier Schematic Diagram

8-61. Detector (A5)

The detector board provides the analog to digital measurement interface for the 4945A receiver. Two measurement channels allow simultaneous detection processes. The board has an on-board self testing capability which gives a board level isolation of malfunctions. The detector circuits are selfcalibrating, needing no adjustments.

Refer to the A5 Block Diagram and the A5 Schematic Diagram when reading this description.

Wideband Detectors

The wideband detectors provide measurement capability over a 20 Hz to 110 kHz bandwidth. Three types of detectors are provided; average, rms, and peak. Besides the level measurement in level/frequency, the detectors also provide signals for other frequency and transients measurements. The detectors are assumed to be linear and are characterized by slope and intercept parameters. The software for the level measurement corrects for both these hardware parameters.

All of the wideband detector inputs to U701 and U702 are ac coupled to remove any dc offsets from the previous circuits. The connections to the autorange amplifiers have diodes across the ac coupling capacitors which provide a dc path to prevent lockup during autoranging. These inputs are then applied to a multiplexer which in turn feeds into the wideband detectors.

The full wave average wideband detectors consist of an absolute value amplifier, and a smoothing filter. The absolute value amplifier (U300-U303 and U400-U403) is an operational amplifier with diodes in the feedback to half-wave rectifies the signal. The output of this half-wave rectifier is buffered to allow the precise dc offset voltage of the circuit to be measured; otherwise the feedback diode would be turned on giving erroneous results.

The rms detector is an rms to dc converter, U601.

For average detection, a 5 Hz, third order, flat delay filter is used (U201).

For peak detection, the absolute valued signal is applied to the converter circuit described below.

Narrowbank Detectors

The narrowband detector circuit is the only one that does full wave average and peak measurements. The level measurement capability is used in the signal to noise, phase jitter, P/AR, transients, and intermodulation distortion measurements. The output of the detector is sent to the transients hardware for hits and dropouts detection. Following the full wave average narrowband detector is a low pass filter which is identical to that following the absolute value amplifier in the full wave average wideband detector.

The absolute value circuit here, as in the wideband channel, is an operational amplifier with diodes in the feedback path.

Converter Circuit

The converter circuit does analog to digital conversion of analog detector outputs, the peak detection process, and generation of a precision calibration signal. All of these functions are under software control. Two analog to digital conversion methods are used; successive approximation and tracking. In the successive approximation method, the processor implements the algorithm and register. In the tracking method, the converter circuit is independent of the processor, and the processor is free for other tasks and can read the result of the analog to digital conversion process anytime. The peak detection process is also independent of the processor.

The converter circuit consists of a comparator (U106), the basic analog to digital interface (U305), a programmable up/down counter (U306, 406 and 506), a register for reading the counter (U405 and 505), and other control logic. Three boolean variables are used as inputs for a state machine implementation;

RCO indicates when the counter is at the limits of its range.

COMP indicates that the detector signal is less than the DAC output. U/D indicates that the counter is counting up or down.

The up/down counter continuously counts, changing the direction of counting upon reaching all zeros or all ones. The limit conditions are sensed by using RCO and U/D. This generates the next state for U/D. The enable line to the counter is always logically true. A precision calibration signal is generated by the converter for measuring the gain and dc offset of the detectors. This signal is a triangle wave generated by the up/down counter and the digital to analog converter. Since the converter is used to both generate a signal, and to read the result of that signal, it is not possible to do both simultaneously. The analog filters following the detectors provide an analog storage of the detector output while the function of the converter circuit is changed. For the peak detector, a dc reference voltage is used which is independent of the converter circuit.

In the tracking analog to digital converter mode, the U/D line of the counter is controlled by the comparator signal, counting up when the DAC is less than the input signal. The tracking ADC must also limit when the input signal is out of range. To do this, the lowest and highest count must be detected, as well as whether the input signal is beyond these limits. The limits of the counting range are detected by using RCO and U/D. COMP indicates the input signal out of range condition.

The successive approximation analog to digital converter is a combination of software and hardware. The software sets the DAC level by programming the counter as a latch; it also reads the state of the comparator. The software in the receiver processor implements the algorithm.

The peak detect mode is a combination of hardware and software. The comparator determines whether the instantaneous value of the signal is above the previously stored peak value residing in the programmable counter. If it is larger, then the peak value in the counter in increased to follow the peak of the signal. By waiting long enough, the true peak value of the signal is stored in the programmable counter, where the software can read it. During this process, the software is examining the contents of the programmable counter because if the signal exceeds the upper input voltage limit of the converter circuit, the counter goes from the highest count to the lowest. The software detects this and indicates an overrange condition on the peak detector.

Software Interface

The software can read the contents of the counter during operation, change the function of the converter without disturbing the contents of the counter, and set the signal paths on the board. The control functions are contained in two bytes which have separate addresses. The control functions are broken up into two groups, detector selection, and detector control.

Detector Control Bits

Following is a description of the control bits for latch U705.

Bits 8-6 are used to control an analog multiplexer at the wideband channel input. This multiplexer selects between the normal signal input from the wideband autorange amplifier, the narrowband autorange amplifier, calibration signals internal to the detector board, and other inputs from other boards used for self-test purposes.

Bit 5 is not used.

Bit 4 controls a transistor switch which turns the calibration signal or DAC output on or off to the input of the analog multiplexer controlled by bits 8-6. This transistor switch isolates the channel inputs from high frequency signals generated by the DAC during the analog to digital conversion process. When this bit is a one, the transistor is on and shunting of the calibration signal off.

Bit 3 is not used.

Bits 2-1 are used to control the mode of the converter circuit by selecting modes of either a latch, tracking ADC, peak detector, or precision triangle wave generator.

Following is a description of the bits for latch U605.

Bits 8-6 control an analog multiplexer which selects the input signal going to the narrowband fullwave average detector. The signals selected can be from the narrowband autorange amplifier, the wideband autorange amplifier, two calibration signals on A5 or self-check signals.

Bit 5 selects the wideband or narrowband absolute value amplifier output for the full wave rectified path.

Bit 4. The selected full wave rectified signal from either the wideband or narrowband detector is either enabled or grounded by this control. When not in use, the control is set to ground to prevent high frequency signals from causing crosstalk at the detector multiplexer.

Bits 3-1 control an analog multiplexer which selects the outputs from all the detectors and applies one of them to the input of the converter circuit.

Converter Read

The contents of the converter circuit can be read while the counters are in operation. The state of the comparator in the converter circuit can also be read by the processor. This comparator output is the most significant bit of the converter output. This bit indicates that the input signal is greater than the DAC output.

During a convertor read, the U505 bits have the following meaning.

Bit 8 is high if the input signal is greater than the signal level programmed into the DAC.

Bit 7 is the Up/Down bit to programmable counter. This output is high if the counter is counting up.

Bit 6 is the Enable count bit to programmable counter. This output is low if the counter is enabled.

Bit 5 is the board presence bit and is grounded.

Bits 4-1 are the most significant bits of converter circuit output.

U405 holds the eight least significant bits of converter circuit output.

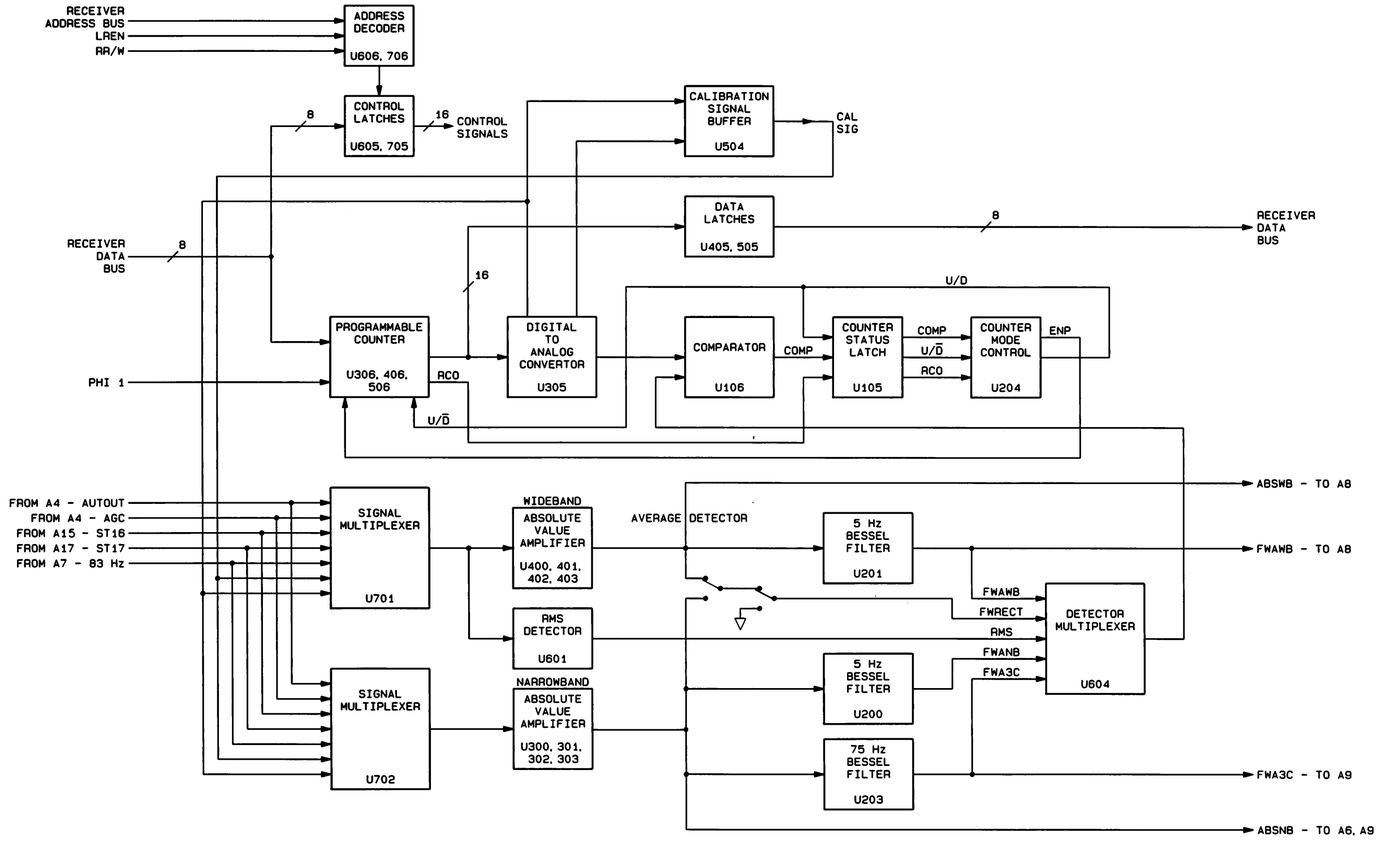

Figure 8-32. A5 Detector Block Diagram

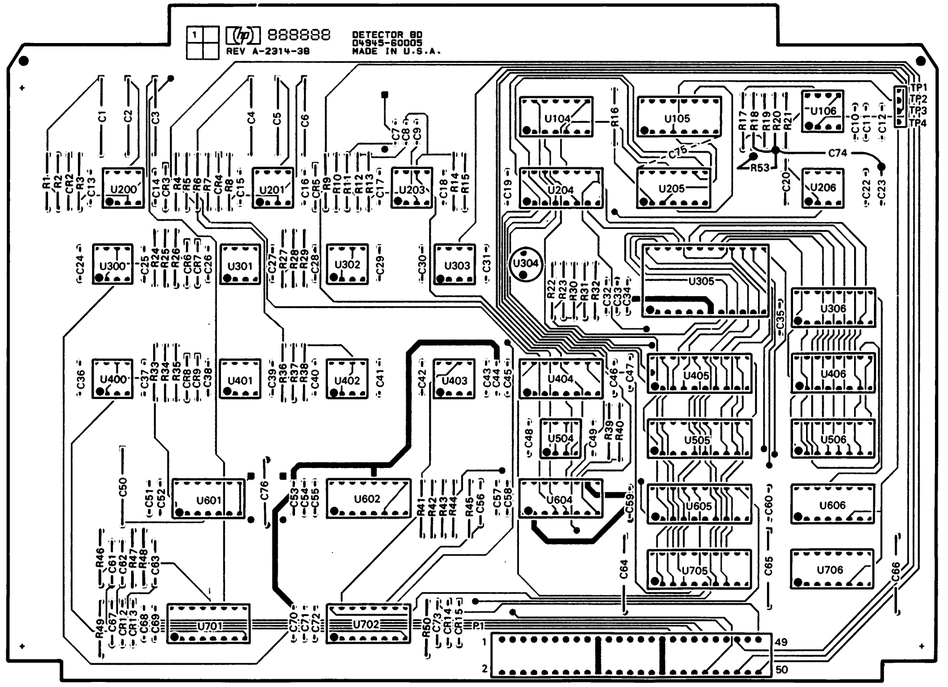

04945-60005 O-1/84 REV. A-2314

REPLACEMENT PAGE FOR 8-276

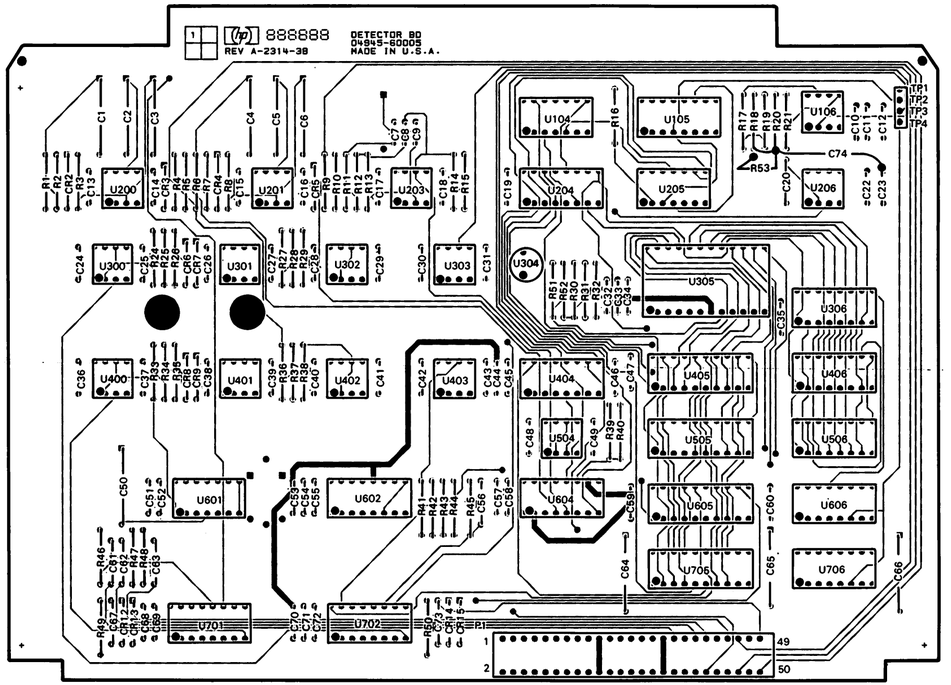

04945-60005 O-9/83 REV. A-2314

Converter Read

The contents of the converter circuit can be read while the counters are in operation. The state of the comparator in the converter circuit can also be read by the processor. This comparator output is the most significant bit of the converter output. This bit indicates that the input signal is greater than the DAC output.

During a convertor read, the U505 bits have the following meaning.

Bit 8 is high if the input signal is greater than the signal level programmed into the DAC.

Bit 7 is the Up/Down bit to programmable counter. This output is high if the counter is counting up.

Bit 6 is the Enable count bit to programmable counter. This output is low if the counter is enabled.

Bit 5 is the board presence bit and is grounded.

Bits 4-1 are the most significant bits of converter circuit output.

U405 holds the eight least significant bits of converter circuit output.

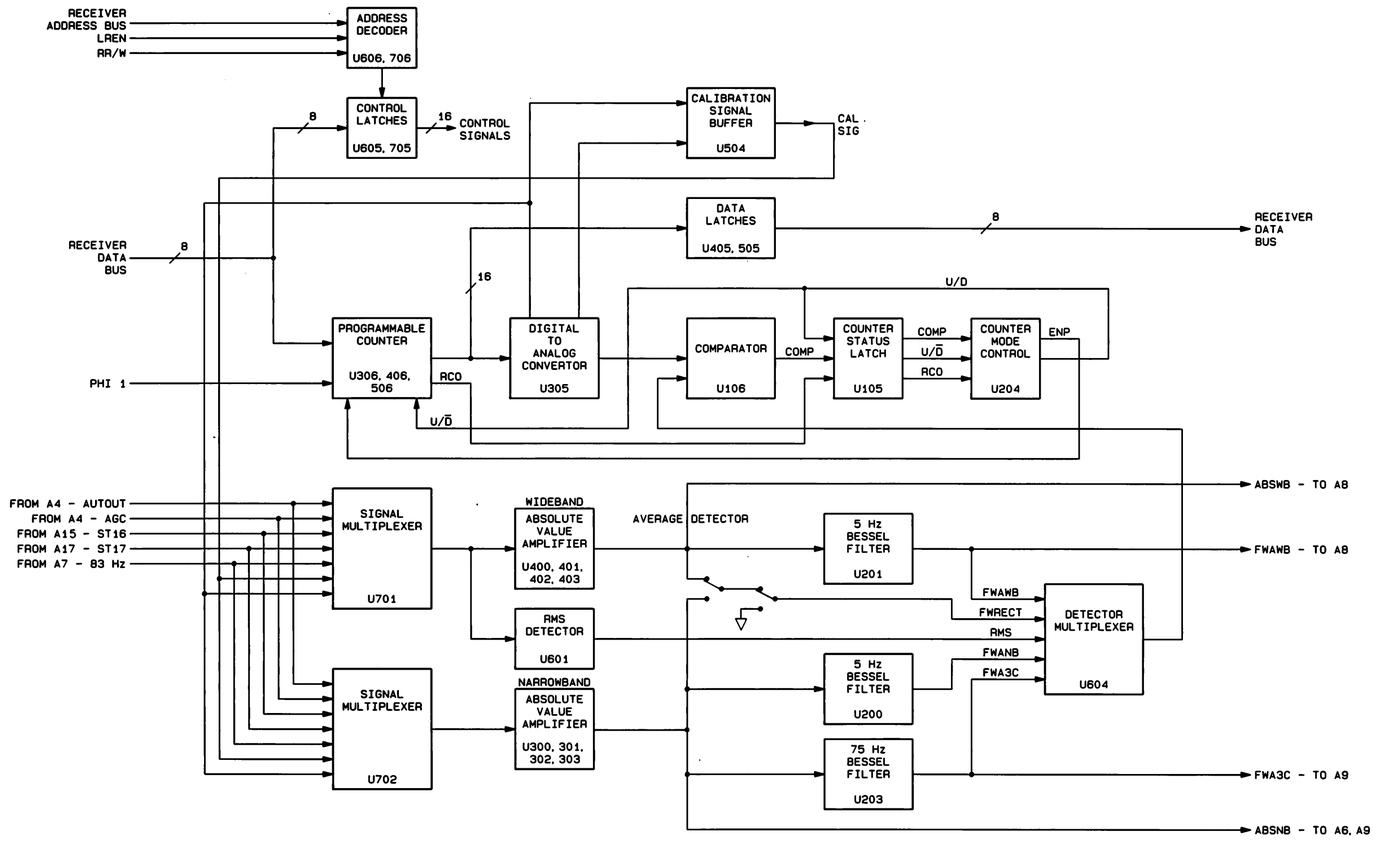

Figure 8-32. A5 Detector Block Diagram

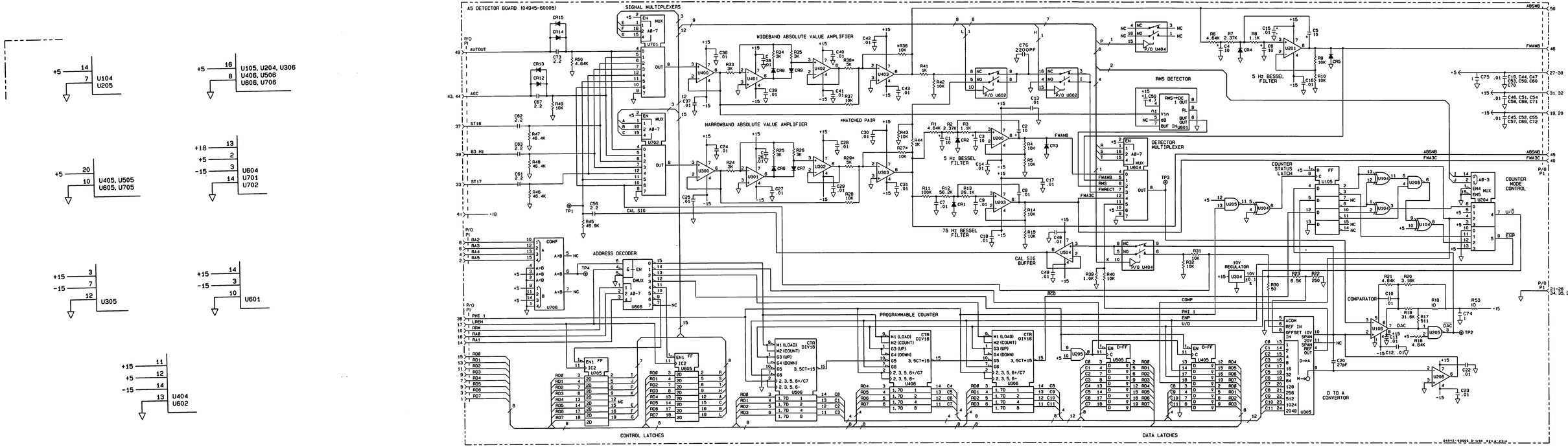

Replacement For Figure 8-33. A5 Detector Schematic Diagram

8-62. Jitter (A6)

The Jitter board is used to make amplitude and phase jitter measurements. Amplitude jitter is unwanted amplitude modulation and phase jitter is unwanted phase modulation. Jitter measurements are made by sending a pure 1004 Hz signal over a communications channel and measuring the modulation accompanying the tone as it is received. The 1004 Hz tone is generated by the Transmitter board (A18). The Jitter board is used to recover the modulation from the received signal.

Interfering signals on a telephone line most likely to cause amplitude or phase jitter are the 20 Hz ringing tone with its harmonics and the 60 Hz power line with its harmonics. Modulation components at frequencies above 300 Hz are rare, and when they do occur, they are normally accompanied by components at lower frequencies. In an effort to reduce the effects of "out-of-band" noise on the measurement accuracy, the received signal is first passed through a 600 Hz to 1400 Hz band pass filter on the A2 board before reaching A6.

Amplitude and phase jitter are measured in three frequency bands: 4 to 20 Hz, 20 to 300 Hz and 4 to 300 Hz. Amplitude and phase measurements can be made separately or simultaneously in any one or in all three frequency bands. Phase jitter is expressed in degrees and amplitude jitter is expressed in percent.

Phase jitter is measured by first passing the received signal through a sine-to-square wave convertor (zero-crossing detector). The output is a TTL compatible square wave which is sent to a phase demodulator. The output of the phase demodulator goes through a low pass filter and an analog-to-digital converter where it is converted to digital form to be read and interpreted by the receiver microprocessor (A10).

Amplitude jitter is measured by feeding a full-wave rectified version of the input signal to an amplitude demodulator on A6. The amplitude demodulator consists of a high pass filter. To measure the demodulated AM level relative to the carrier, the carrier level is always adjusted to beat a set level before the demodulated AM is measured. The carrier level is set by using the fine attenuator on A4.

Sine-to-Square Wave Converter

U708, U606 and their associated discrete parts make up the sine-to -square wave converter. The auto-ranged input signal is input on pins 43 and 44 of P1. Any dc component is removed by the high pass filter C58, C59 and R78. CR9 and CR10 provide overvoltage protection for U708. After auto ranging, the signal level at the input to U708 is .75 to 2.50 volts rms. The input signal is applied to U708, a two stage differential amplifier, and then to U606, a high-gain comparator. The comparator output is a TTL compatible square wave. The square wave level transitions coincide with the zero crossings of the sine wave input.

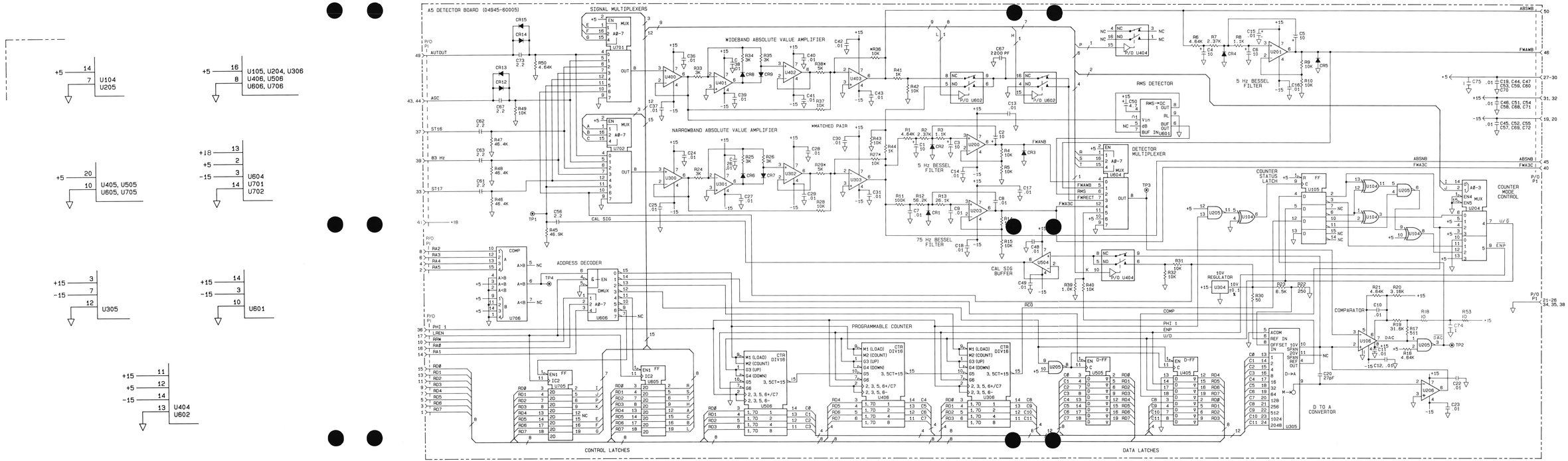

Figure 8-33. A5 Detector Schematic Diagram

2. Jitter (A6)

The Jitter board is used to make amplitude and phase jitter measurements. Amplitude jitter is unwanted amplitude modulation and phase jitter is unwanted phase modulation. Jitter measurements are made by sending a pure 1004 Hz signal over a communications channel and measuring the modulation accompanying the tone as it is received. The 1004 Hz tone is generated by the Transmitter board (A18). The Jitter board is used to recover the modulation from the received signal.

Interfering signals on a telephone line most likely to cause amplitude or phase jitter are the 20 Hz ringing tone with its harmonics and the 60 Hz power line with its harmonics. Modulation components at frequencies above 300 Hz are rare, and when they do occur, they are normally accompanied by components at lower frequencies. In an effort to reduce the effects of "out-of-band" noise on the measurement accuracy, the received signal is first passed through a 600 Hz to 1400 Hz band pass filter on the A2 board before reaching A6.

Amplitude and phase jitter are measured in three frequency bands: 4 to 20 Hz, 20 to 300 Hz and 4 to 300 Hz. Amplitude and phase measurements can be made separately or simultaneously in any one or in all three frequency bands. Phase jitter is expressed in degrees and amplitude jitter is expressed in percent.

Phase jitter is measured by first passing the received signal through a sine-to-square wave convertor (zero-crossing detector). The output is a TTL compatible square wave which is sent to a phase demodulator. The output of the phase demodulator goes through a low pass filter and an analog-to-digital converter where it is converted to digital form to be read and interpreted by the receiver microprocessor (A10).

Amplitude jitter is measured by feeding a full-wave rectified version of the input signal to an amplitude demodulator on A6. The amplitude demodulator consists of a high pass filter. To measure the demodulated AM level relative to the carrier, the carrier level is always adjusted to beat a set level before the demodulated AM is measured. The carrier level is set by using the fine attenuator on A4.

Sine-to-Square Wave Converter

U708, U606 and their associated discrete parts make up the sine-to -square wave converter. The auto-ranged input signal is input on pins 43 and 44 of P1. Any dc component is removed by the high pass filter C58, C59 and R78. CR9 and CR10 provide overvoltage protection for U708. After auto ranging, the signal level at the input to U708 is .75 to 2.50 volts rms. The input signal is applied to U708, a two stage differential amplifier, and then to U606, a high-gain comparator. The comparator output is a TTL compatible square wave. The square wave level transitions coincide with the zero crossings of the sine wave input.

Phase Demodulator

There are two phase modulator circuits on A6; each with a different high pass characteristic. Each consists of a phaselocked loop made up of a phase detector (exclusive-OR gate), a low pass filter and a voltage controlled oscillator (VCO). The overall frequency response of each phase locked loop is second order high pass.

20 Hz Loop

The first loop provides a 20 Hz high pass characteristic (U108, U208, U408 and U508). Phase detection is provided by the exclusive-OR gate (U508C). U408A is used as a non-inverting buffer for the phase detector output. U408B is used as the loop filter, a first-order low pass filter with a 12 Hz cutoff. R58 and R59 establish a 2.5 volt reference at U408 pin 5. R42, C35 and C36 determine the response of the filter. CR4 through CR7 limit the voltage swing at U408 pin 7 preventing the loop from locking with the VCO tuned to a harmonic or sub-harmonic of the 1004 Hz input signal. CR3 shifts the level of the filter output to the input of the VCO.

U208 is the voltage controlled oscillator. It is a timer in an astable configuration fed by the collector current from Q1. This current determines the output frequency at U208 pin 3. The collector current of Q1 is controlled by the base voltage. The output frequency at U208 pin 3 is approximately 4016 Hz. U108 is a dual J-K flip-flop which divides the frequency by four to 1004 Hz and converts the VCO output to a square wave. The output of U108 is fed back to the phase detector (U508) for comparison with the input signal.

The U108 output also goes to U607 which acts as a buffer and provides a clean 1004 Hz carrier for frequency measurement. This clean carrier also goes to the carrier output on the rear panel (on A59).

4.0 Hz Loop

This phase demodulator is essentially identical to the 20 Hz loop except that the low-pass filter has a 2.5 Hz cutoff. This makes the overall response a second order, 4 Hz high pass. This loop has a long aquisition time so an "out-of-lock" detection circuit (U205, U305 and U508B) has been added to shorten the time needed to aquire lock. U305 with R51 and C40 produce a square wave that lags the input square wave by 90 degrees. When the loop is locked, the VCO output (U106 pin 15) leads the input square wave by 90 degrees. Thus U305 pin 7 is 180 degrees out of phase with U106 pin 15. In this case, the voltage at U205 pin 2 is near +5.0 volts.

U205 functions as a low speed comparator. R31 and R32 set the reference voltage at pin 3 to +3.7 volts. In the locked condition, U205 pin 1 is -15 volts and Q405 is off. If the loop is not locked, the voltage at U205 pin 2 falls below +3.7 volts and the output of U205 goes to +15 volts and Q3 turns on. This results in R54 being shunted by R53 which decreases the lock aquisition time. After lock is aquired, Q3 is turned off and the low pass filter is in its normal state.

Amplitude Demodulator

The amplitude demodulation process actually begins on A5 where the received signal is full-wave rectified. This rectified signal is applied to a 4 Hz and a 20 Hz high pass filter on A6. These filters recover the amplitude modulation from the received signal. U504 and the associated discrete components make up both high pass filters. Switch U506 selects one of these filters. U504B amplifies the demodulated amplitude jitter signal to approximately the same level as the demodulated phase jitter signal.

Low Pass Filters

Both the amplitude and phase demodulators exhibit high pass frequency characteristics. The low end cutoff of the overall jitter response is determined by the demodulator. To establish a high end cutoff, the demodulator outputs are sent through one of two low pass filters. These filters also remove the carrier and any harmonics which may have been generated during demodulation.

U104A and B act as level shifters that remove any dc component from the demodulator outputs.

The 300 Hz low pass filter consists of U102 and its associated discrete components. This filter is a three stage, fifth order filter that inverts and provides a signal gain of +18.5 dB in the passband.

The 20 Hz low pass filter consists of U200 and its associated components. This is a three stage filter that inverts and provides +18.5 dB gain in the passband.

Analog to Digital Converter

The remaining A6 circuits control the jitter measurements by selecting the appropriate signal path and convert the demodulated and filtered output signal into digital form for use by the receiver microprocessor.

A6 is addressed by the microprocessor on A10 through address comparator U400. U400 pin 6 goes high when the address on the RA lines matches the A6 address. When addressed, address decoder U500 generates a chip select signal to the part of the A6 board being addressed. Eight bit commands are written to the A6 board via the RD bus to U700. The U700 outputs directly control the hardware set-up of the board through switches U204 and U506, and the analog multiplexer U302. The hardware setup can be verified by the receiver microprocessor through the output latch U600.

The desired signal is selected by the analog multiplexer (U302) and routed to the analog to digital converter (U402) which is an eight bit converter. +5 volt and -5 volt references are provided by voltage regulator (U300) and inverting buffer (U200). Thus U402 can read input voltages from -5 volts to +5 volts. When U402 pin 15 goes low, a conversion of the input voltage is made and the result of any previous conversion is output on the data bus (D0-D7) through the output buffer U502). This jitter measurement data is sent through the output buffer U502). This jitter measurement data is sent to the receiver microprocessor.

Besides selecting the demodulated amplitude and phase jitter signals, U302 can also select the following;

- o VCO inputs from the two phase locked loops.
- o The +5 volt reference of the A to D converter.
- o Analog or digital grounds.

These signals are read during self-test to insure correct jitter board operation.

The demodulated amplitude or phase jitter signal is made available at the rear panel via a path from U302 pin 12 through analog switch U506 and buffer U102. Because the various filters on A6 are time-shared, the demodulated jitter signal is stable only when measuring either amplitude or phase jitter (but not both) and only in one of the three possible measurement bands.

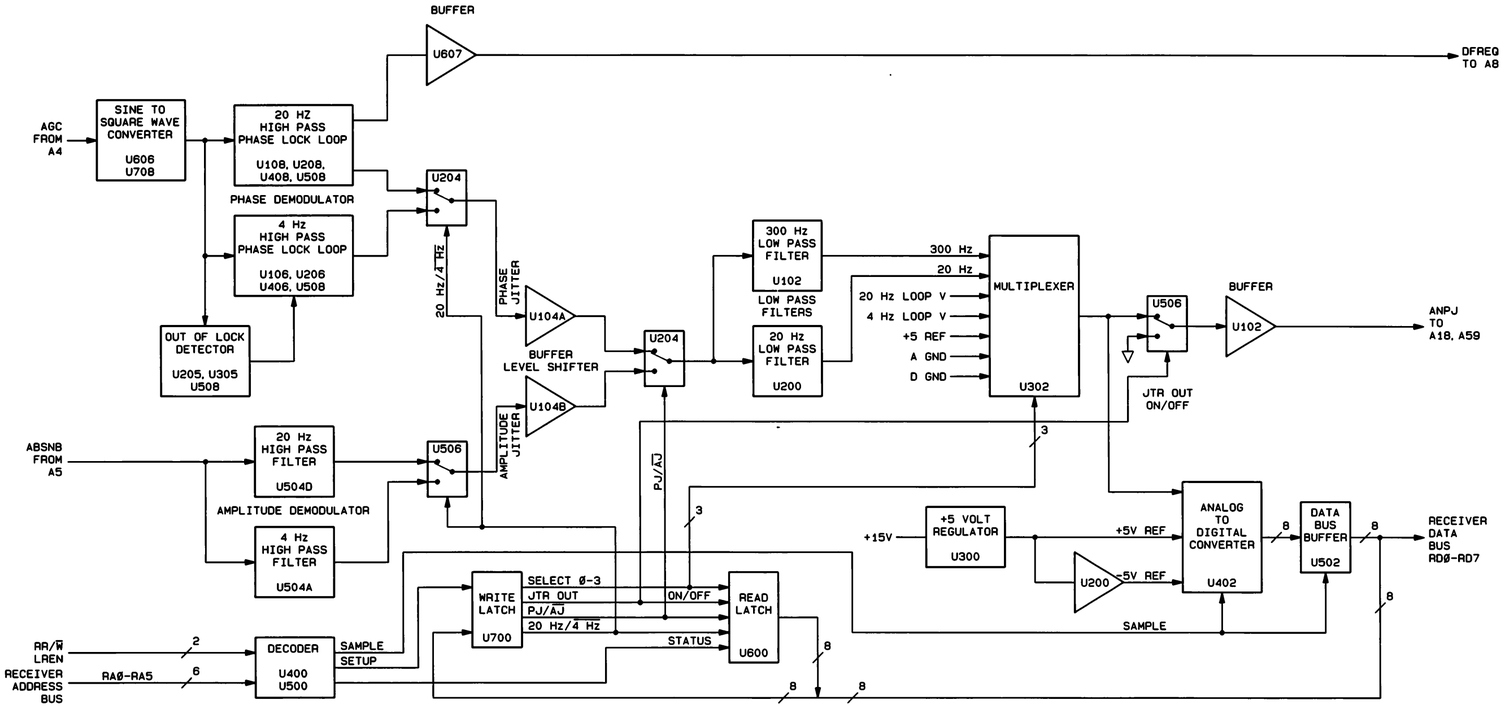

Figure 8-34. A6 Jitter Board Block Diagram

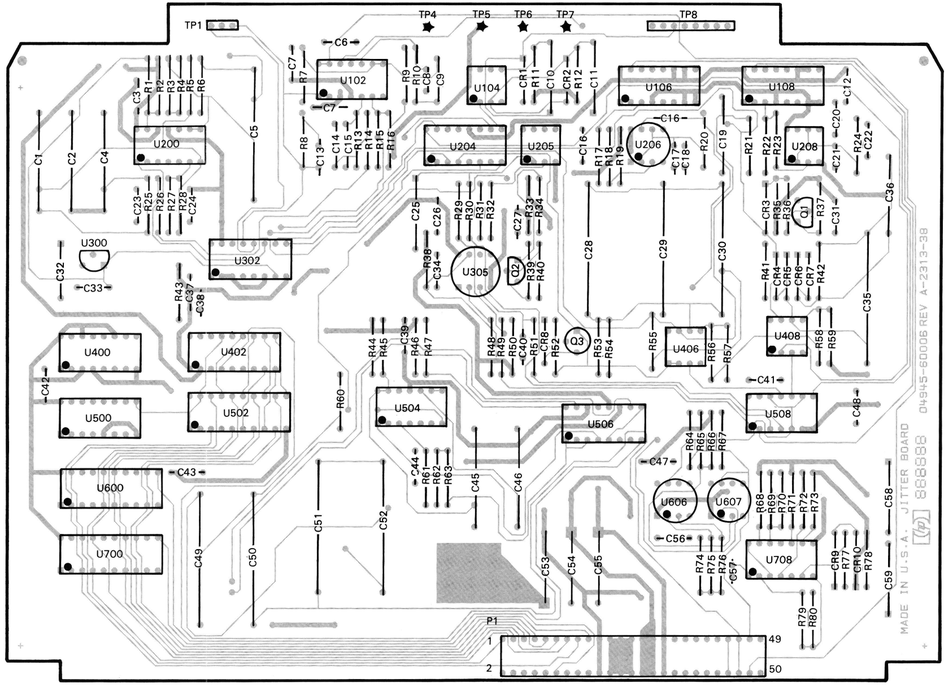

04945-60006 0-11/82

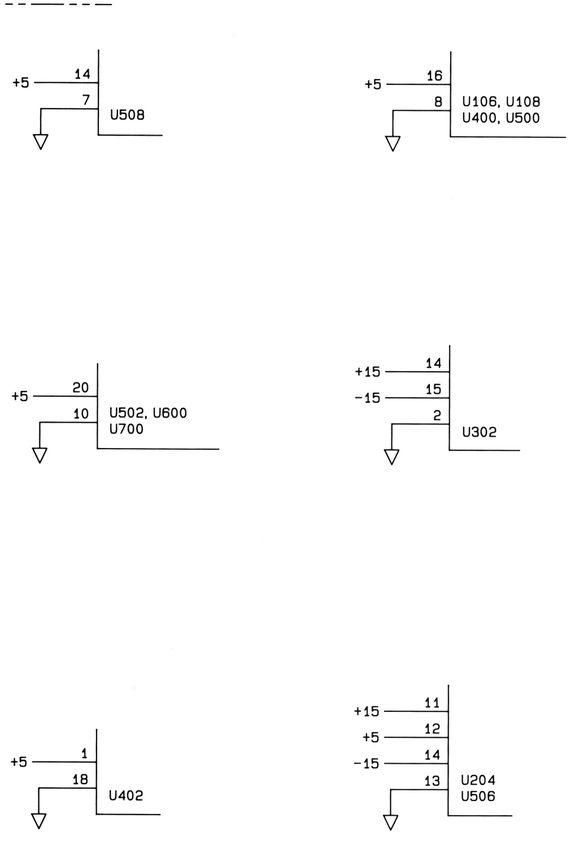

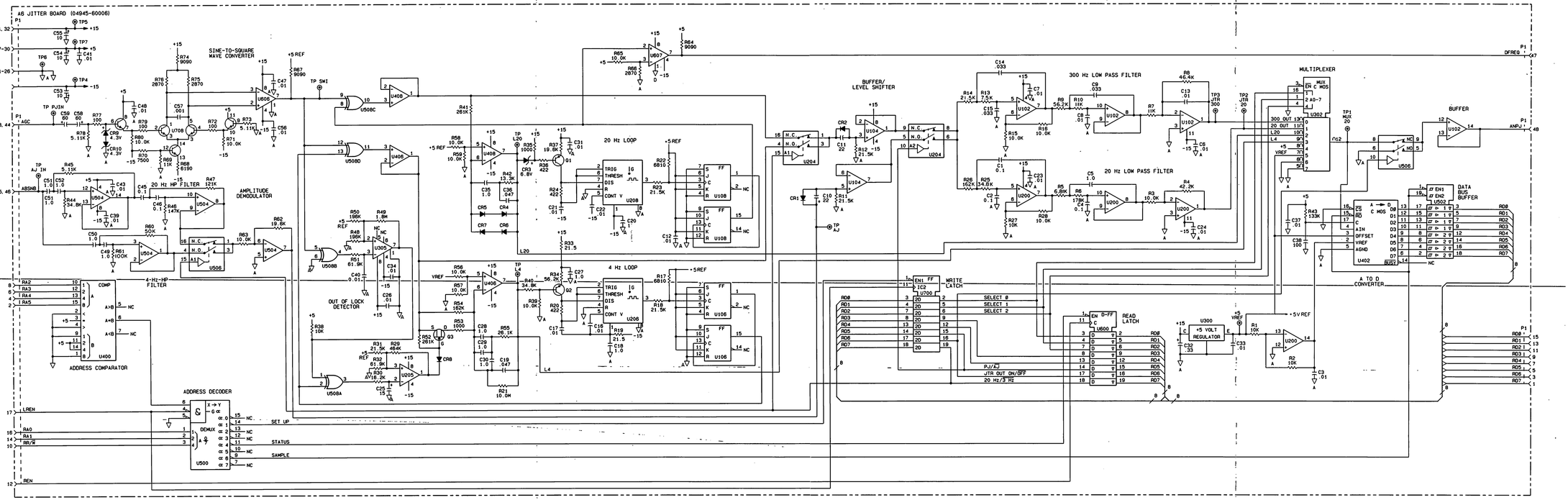

Figure 8-35. A6 Jitter Board Schematic Diagram

8-63. US Envelope Delay (A7)

A7 measures the envelope delay distortion. The input to the board is from the A4 wideband autorange amplifier (AUTOUT). The 2 kHz bandpass filter (U404, U407, U604, U605 and U707) is used in the master/slave mode. It allows an envelope delay measurement to be made with the FSK tones and the pilot tone present. Otherwise, this filter is not used and the input signal goes directly to the AGC circuit (U303, U307). The AGC circuit adjusts the gain of the AUTOUT signal to keep the level constant.

After the AGC circuit, either the AUTOUT signal or an 83 1/3 Hz calibration signal can be selected. In all modes other than envelope delay, the calibration signal is switched into the two channels. This keeps the filter tuning correct so that when an envelope delay measurement is made, the filters are tuned and little settling time is needed.

Assuming an envelope delay measurement is being made, the AUTOUT signal is applied to the high-Q and low-Q channels. There is a 90 degree phase shift between the two channels. The low-Q channel (U204, U207) provides a phase reference for the hi-Q channel (U102, U103 and U104). The output of the high and low channels is compared by a phase detector in the signal correction circuit (U104, U201). The output of the phase detector goes to an integrator. The integrator provides a frequency correction signal to the high-Q channel to stabilize the loop.

In a sweep mode, the correction signal is disabled to prevent undesirable correction signals as the frequency changes.

The output of the high-Q channel triggers a one-shot (U300) which starts counting and prevents other edge changes from being detected.

The leading edge detector (U200, U300) finds the phase difference between the 83 1/3 Hz signal from the high-Q channel and the 83 1/3 Hz reference signal.

The output of the edge detector goes high when the reference signal rising edge occurs and goes low when measured signal leading edge occurs.

The edge detector output triggers the single interval counter (U501, U502 and U602). The 1 MHz clock is gated to the 14 bit counter (U700, U701) for the duration of the detector pulse width. The count in the 14 bit counter represents the delay measurement. The counter output goes to the receiver processor via the receiver data bus (U702, U800, U801).

The 1 MHz clock input is also used to create the 83 1/3 Hz reference. First the 1 MHz clock is divided by 100 to produce 10 kHz and that is divided by 12 to produce 833 1/3 Hz, and finally that is divided by 10 to produce the 83 1/3 Hz reference (U500, U600 and U601).

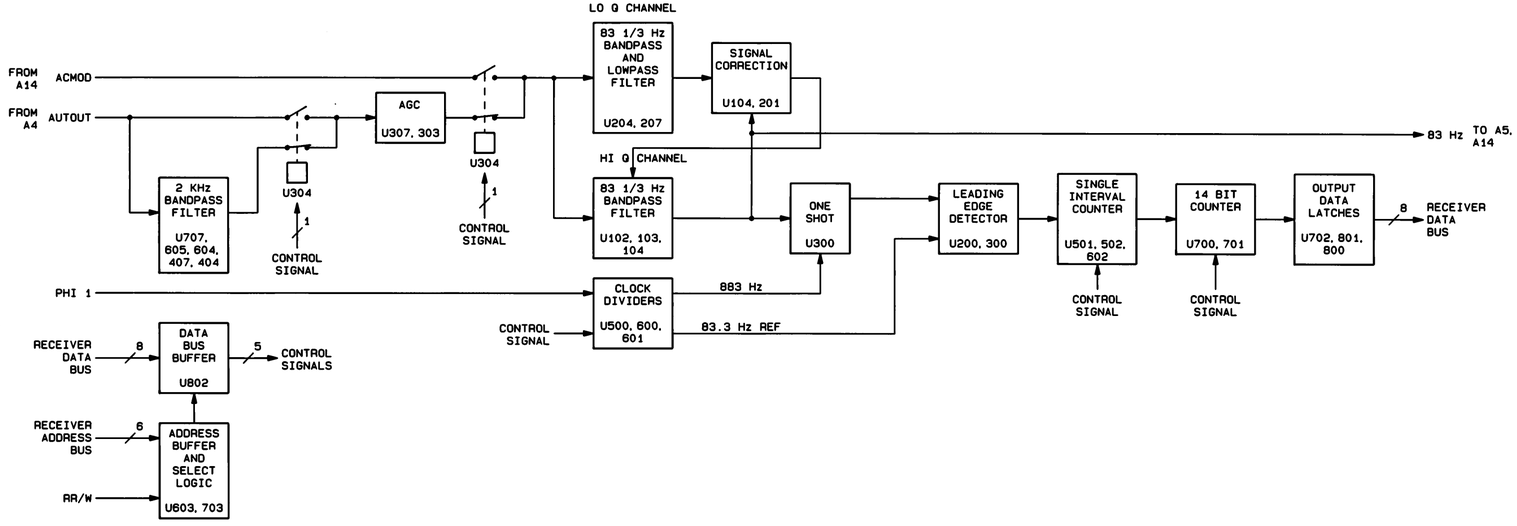

Figure 8-36. A7 Envelope Delay Block Diagram

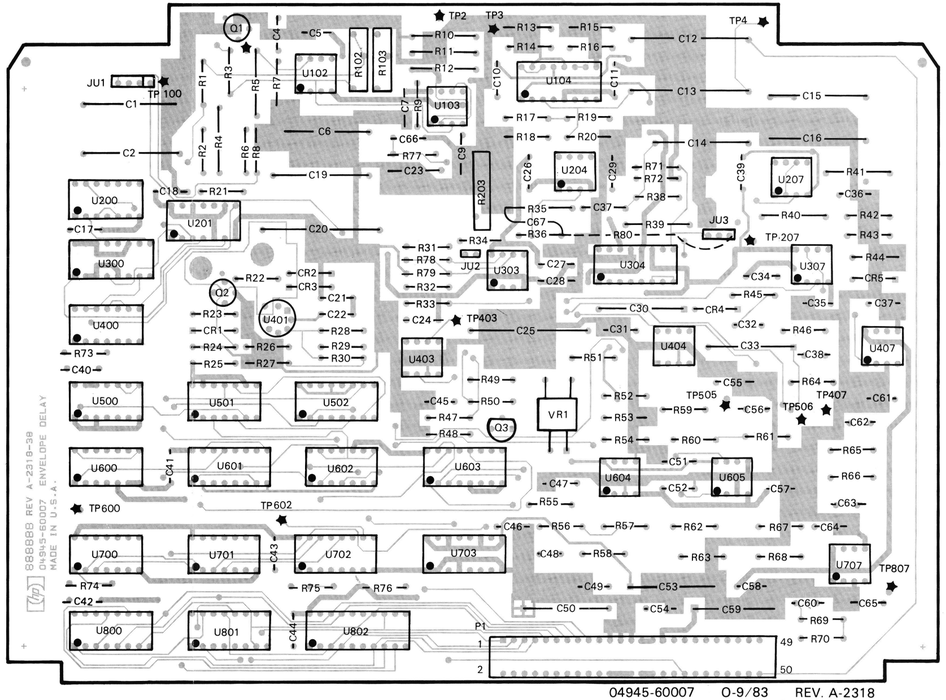

04945-60007 O-9/83 REV. A-2318

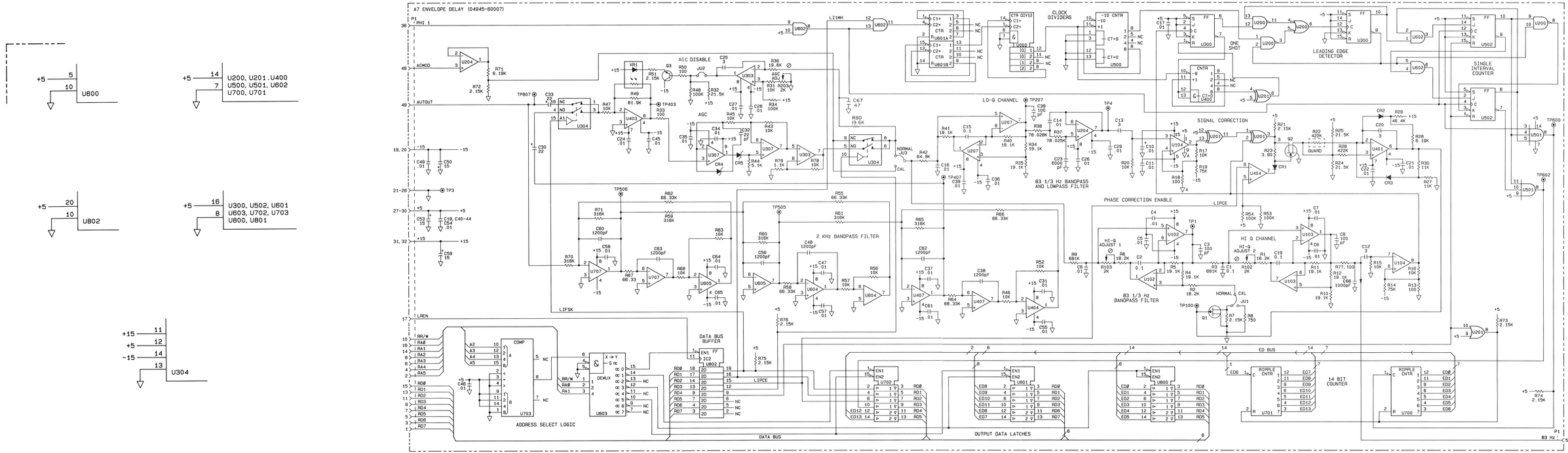

Figure 8-37. A7 Envelope Delay Schematic Diagram

8-64. Frequency Counter (A8)

A8 contains the frequency measurement circuits as well as the impulse noise detectors. The frequency measurement system works under the direct control of the A10 receiver processor, while the impulse noise detectors are set up and polled by the transients processor on A9.

Frequency measuring is accomplished by squaring the autoranged input signal from either the narrow or wide band and clocking a digital counter with it. A second counter is clocked by a known reference frequency. The receiver processor initiates the measurement by resetting the counters simultaneously. After the reference counter has counted 50,000 reference periods, the measurement stops and the two counters are read. When the counts are divided and scaled by a constant, the result is the input signal frequency.

The impulse noise detectors are programmable dc threshold comparators (DAC). The transients processor determines the proper thresholds to program into the comparators for the three impulse noise settings selected and programs three DACs accordingly. The DAC outputs are compared against the input signal and any resulting detector output is stretched by a one shot (U4020 to insure that the transients processor sees it when the detector is polled.

Frequency Measurement

The frequency measuring portion of A8 is divided into three main sections: receiver processor interface, input signal squaring, and periods counting.

The receiver processor interface is the Address Decoders (U403 and 503), Input Latch (U303) and Data Buffer (U304). The address decoders select four receiver bus addresses for controlling the various board functions. One of these addresses enables the input latch. The input latch outputs control the periods counter reset, wide or narrow band channel selection, and counter output scanning. Two other addresses enable the Data Buffer to read either the "periods" counter (U101) which counts periods of the input signal or the "time" counter (U102) which counts periods of the reference clock.

Input signal squaring for the two bands is done by analog comparator circuits (U205, U305 and U405).

For the wide band signal, a passive low-pass filter removes any high frequency noise which might cause comparator switching errors. The signal is then inverted and both the inverted and non-inverted signals are applied to threshold comparators whose outputs drive the set and reset inputs of a flipflop U103. To improve noise immunity, the dc full-wave average of the signal (FWAWB) is used to set the switching threshold. The output of the flip-flop is a digital square wave with the same frequency as the input waveform.

In the narrow band, the phase jitter filter on A2 or the transients Bessel filter on A4 is used to provide noise immunity. An additional bandpass filter also exists on the input to the narrowband squaring circuit (U405 and associated components). The squaring circuit just performs halfwave rectification before applying associated components). The squaring circuit just performs halfwave rectification before applying the signal to a fixed reference comparator. Measuring frequency in the narrow band implies measuring a holding tone close to 1000 Hz. The squaring circuit does not function properly outside this fairly narrow range.

The squared input wave is selected from either the narrow or wide band and applied to the periods counter (U101). This counter and its counterpart measuring the reference clock (U102) are five-decade, BCD counters. They are reset and enabled under software control. The counters are disabled by the falling edge of the input clock after the reference counter has exceeded 50000 counts. The counters are then read through the data buffer and the frequency is determined from the contents.

Impulse Noise Detector

The impulse noise detector is independent of the frequency circuit. It consists of the transients processor interface and the three threshold comparators for low, middle and high value impulse detection.

The transients processor interface is the input latch U501, the latching inputs of the DACs, and the output buffer U302. Enables for each of these come from the transients processor (A9). The input latch acts as a buffer between the processor bus and the DACs (U201, U301, and U401) which are not fast enough to latch the processor data directly. When writing to the DACs, the processor first writes to the input latch and then enables the appropriate DAC on the next cycle.

The three DACs convert the digital outputs from the transients processor into dc levels corresponding to the desired impulse thresholds. Only the low threshold DAC, U401, has its level set directly by the reference diode CR5. The other two DACs derive their levels from the output of the previous DAC. This way the mid and high thresholds can be set as intervals above the low threshold. These two DACs are configured as dividers so that their outputs are always greater than that of the previous level. The DACs always invert from their reference, so the low threshold DAC has a negative reference which gives a positive output but the mid threshold DAC then has a positive reference. Thus its output must be inverted before application to the comparator.

The absolute value of the notched signal is applied to the other input of the comparators so that any impulse of sufficient amplitude breaks the threshold of the designated detector. This causes a short pulse at the comparator output which is stretched to 300 us by the oneshots U402 and U502. This insures that the transents processor catches the impulse as it polls the detectors every 200 us.

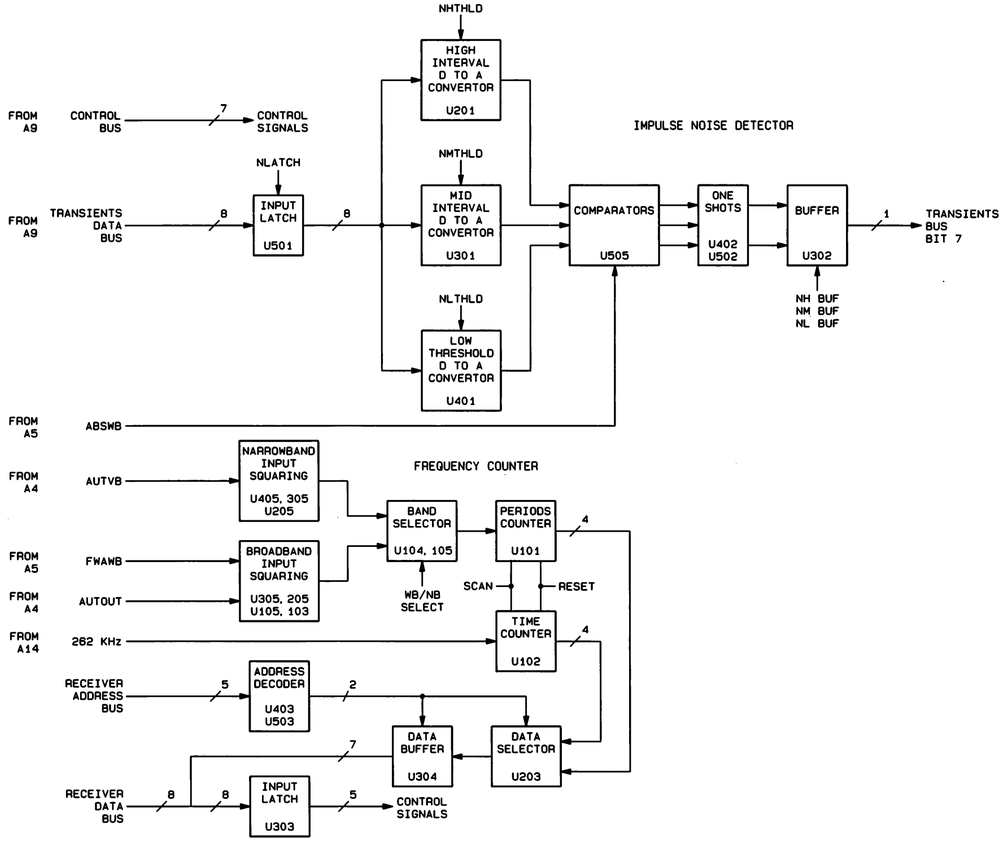

Figure 8-38. A8 Frequency Counter Block Diagram

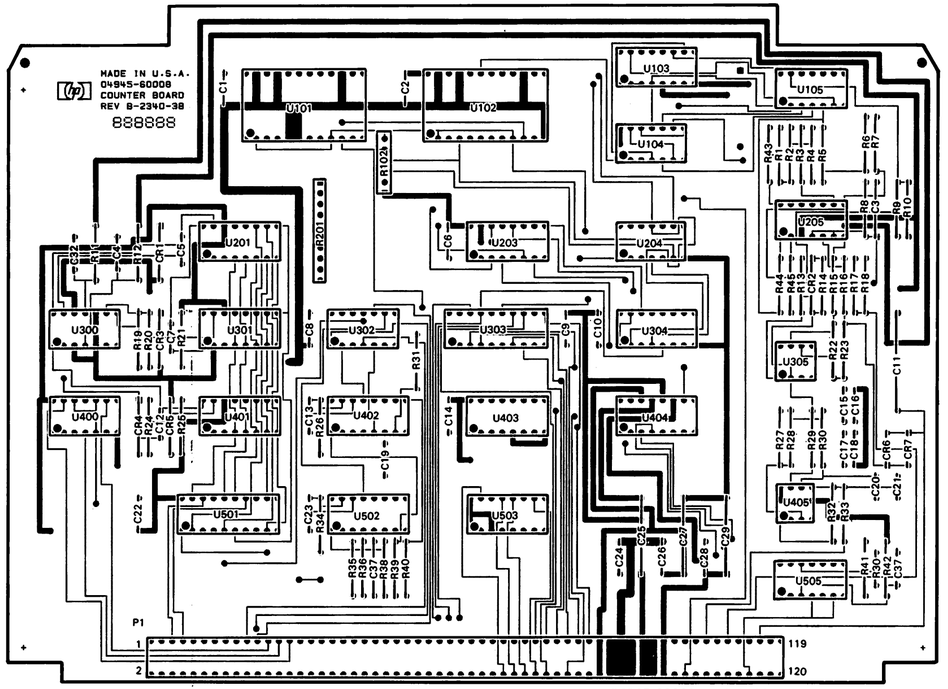

04945-60008 O-9/83 REV. A-2337

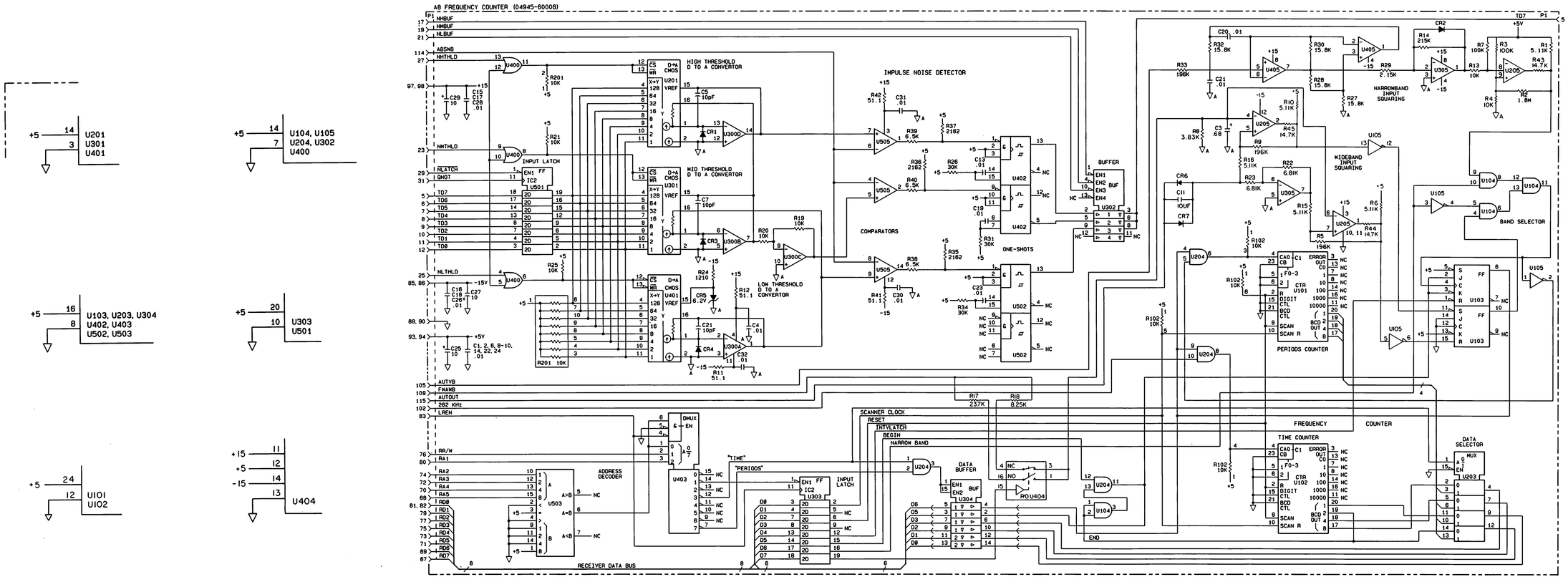

Figure 8-39. A8 Frequency Counter Schematic Diagram

8-65. Transients Detector (A9)

Introduction

A9 contains the majority of the transients detection circuitry. It contains the transients microprocessor, dropout detector, gain hit detector, and phase hit detector.

The transients microprocessor runs independently of the receiver and system microprocessors. Its function is to initialize the transient detectors to the proper threshold values and to control the timing intervals and hierarchy associated with each detector.

The dropout detector looks for a drop in the holding tone level to 12 dB below its original level. This detector also must continue to indicate the presence of the dropout even when noise has brought the signal level back up to the holding tone level.

Gain hits must be detected for both positive and negative changes in gain. The gain hit detector monitors the full-wave average value of the signal and compares it against voltage thresholds above and below a sampled-and-held version of the last established reference. Once a gain hit has been detected the sample-and-hold reference changes to the new level.

Phase hits are measured using a phase-locked loop which compares the phase of the current signal against the loop phase. The bandwidth of the loop is such that a phase hit is not integrated out until after a 4 ms qualification time has passed, but is integrated out after a 125 ms blanking interval.

Transients Microprocessor

The transients microprocessor (U102) operates on a 2 MHz clock derived from an 8 Mhz crystal (Y1) and an on-board clock generator. Supporting the microprocessor are the A9 select decoders U802 and U902, input latch U502, output latches U302 and U402, handshake control flag U702, transients ROM U400, RAM U600, and transients enable decoders U800 and U900.

The transients processor controls the set-up of the transient detectors once they are initialized by the receiver processor. The resulting detector data is sent back to the receiver processor. Communication with the receiver processor takes place through the input and output buffers using a handshake system directed by the control flags in U702. A write from the receiver processor to the input latch automatically sets the input buffer full flag and a read from the input buffer to the transients processor automatically clears the flag. Similarly, a write to the output buffer by the transients processor sets the output buffer full flag while a read of the output buffer by the receiver processor clears it. The receiver processor can reset the transients processor by writing to a location which sets the flipflop driving the processor's NMI input.

Data from the transients processor goes to the 128 byte RAM (U600) under control of the transients processor program which resides in the 2K ROM (U400). Once initialized by the receiver processor the transients processor sets up the detector controls through decoders U800 and U900. It then runs in a 200 microsecond software loop, polling the detector output buffers and counting transients.

Dropout Detector

The drop-out detector input is a full-wave rectified sine wave whose amplitude is originally adjusted to 0.775 V rms. This signal is amplified by 10 dB and passed into a threshold detector with a -2 dBm reference (giving a 12 dB spread). As long as the peaks of the input wave exceed the threshold, the output is a pulse train whose frequency is approximately 2 kHz. The pulses trigger the timer U803 which outputs pulses of fixed "high time" determined by its RC control network to be 464us. As long as the input pulse train is consistently about 2 kHz, each input pulse causes an output with evenly spaced gaps. These gaps are prolonged by the retriggerable one-shot U805 and latch U905 to give a steady low output at the buffer U604 as long as no dropout is present.

When a dropout occurs, the level of the input signal initially falls below the threshold at the comparator, and the timer stops triggering. This causes U805 to stop triggering which causes the buffer input to go high indicating that a dropout has occurred. At this point, however, the noise level on the line may return to the original level of the signal. If this happens the timer starts to trigger again, but sporadically. The result is that the "gaps" at the timer output are phase shifted randomly. Noise suppression circuits, comprised of several logic gates at the timer output, suppress the randomly spaced gaps and keep the buffer input high until the regularly spaced gaps return signalling the end of the dropout. Because of the one-shot, the detector continues to indicate a dropout for 2.35 ms after the dropout ends. This is compensated for in the transients processor software.

Gain Hit Detector

The Gain Hit detector input signal is a 300 Hz low-pass filtered version of the drop-out detector input. Since the fundamental frequency of the fullwave rectified signal is 2 kHz, the 300 Hz low-pass (on A5) removes all but the dc value or full-wave average value of the signal. This dc signal is amplified by approximately 8 dB (U703) and then applied to comparator U703. The other inputs to these comparators are the reference voltages corresponding to positive and negative gain hits.

The reference voltages are obtained from a sampled version of the input signal. The processor closes one half of switch U705 at the start of the transients measurement. This voltage is buffered and applied to the referece inputs of multiplying DACs U403 and U503. U403 is used as a divider to provide the positive gain hit reference and U503 is used as a multiplier to provide the negative reference. The constant multiplier/ divider output is initially latched into U303 by the transients processor.

When a rapid gain hit occurs, one of the thresholds is exceeded because the RC network slows the reference voltage generator's response to the change. This causes the comparator output to go low and the transients processor to detect the hit at the buffer output. Once the hit has been detected, switch U705 opens so that the reference voltage stays fixed at its old level until the hit qualifies. When the hit either qualifies or fails to qualify, both of the U705 switches are closed to quickly re-establish reference with the new level. After the appropriate blanking interval, the second switch is reopened and the cycle begins again. The long RC time constant is specified by the dynamic response characteristic outlined by the IEEE specifications and the short RC time constant (with both switches closed) must be less than 6 ms in order to count gain hits at 100 counts per second.

Phase Hit Detector

Phase hits are detected by a digital pulse width measuring circuit coupled with an analog phase-locked loop. The .775 V rms sine wave input (AGC) is squared (U405), shifted to TTL levels and then divided by two (U505) before application to the phase detector (U704). The divide by two is essential in keeping the loop stable over a full 360 degree phase range. The phase detector is an exclusive OR gate that compares the input signal to a loop feedback signal. The phase detector output is a pulse that goes to a data selector (U406). In normal operation, the divided input signal from U704 is selected. The second U406 input is selected to see if a phase hit qualifies. This signal is the undivided loop feedback signal. The TTL signal from U406 is level shifted to equal + and - levels which are applied to a loop lowpass filter U606. The low-pass filter gives a loop bandwidth of 100 radians per second. The filter output drives the voltage-controlled oscillator U605. Q8 and Q9 linearize the VCO's response to phase. The VCO operates at four times the input frequency. The VCO output goes to a divide by two circuit (U506) which changes the VCO output to a square wave. This is also where the loop feedback signal comes from. Q5 is used to correct the VCO output signal.

The output of U506 goes to another phase detector (U704) where it is compared with the undivided input signal from U305. The resulting pulse (phase difference) goes through a limiting circuit (Q1, Q2 and Q3) to limit large phase hits. The signal goes through a low pass filter which passes the dc value of the phase detector. This dc value is proportional to the phase offset. The phase detector phase offset goes to comparator U104. Here it is compared to a dc reference that is set by the transients processor. This dc reference is the phase limit set from the front panel.

Phase hit outputs from U104 are sent on bit 7 of the transients data bus.

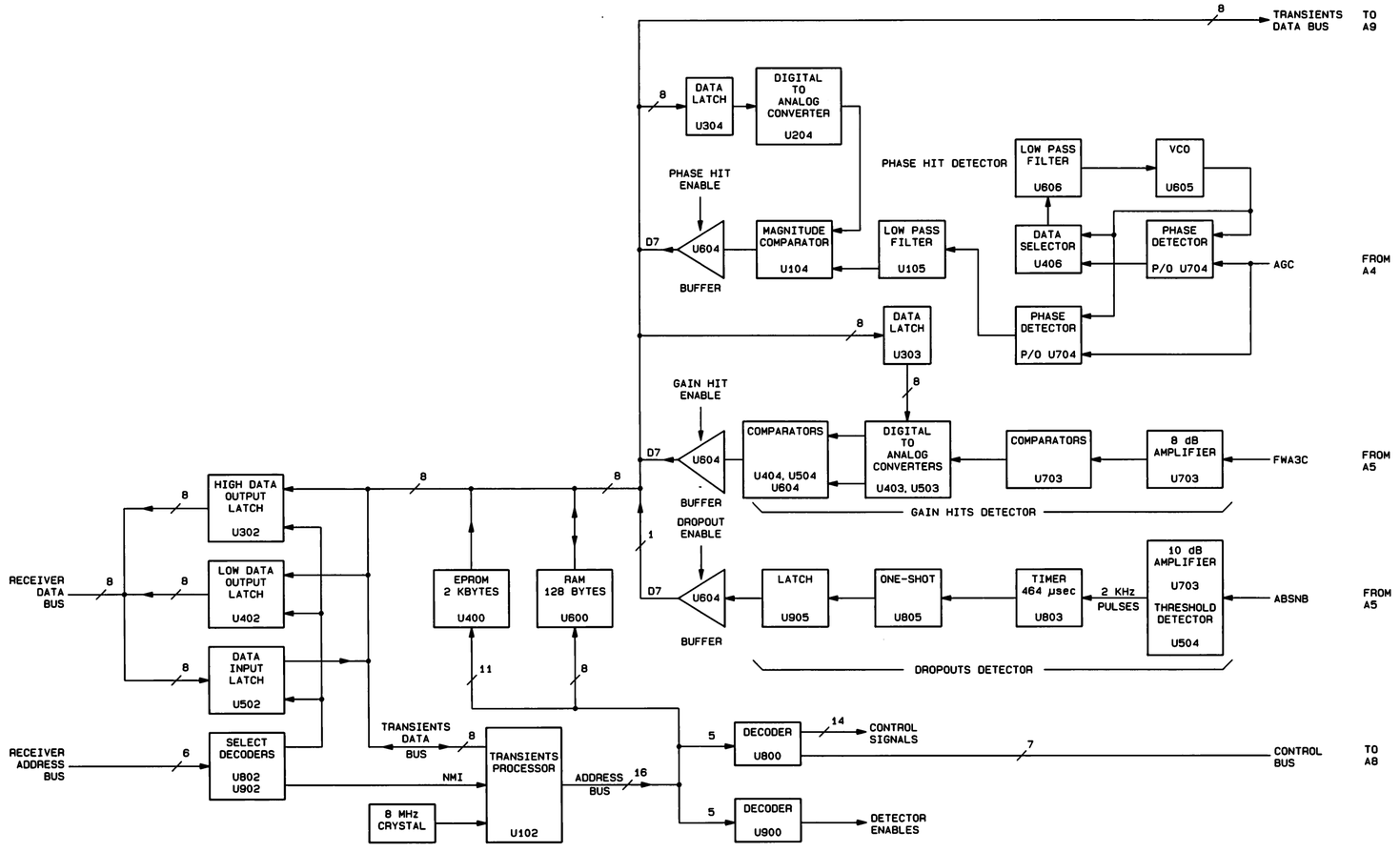

Figure 8-40. A9 Transients Detector Block Diagram

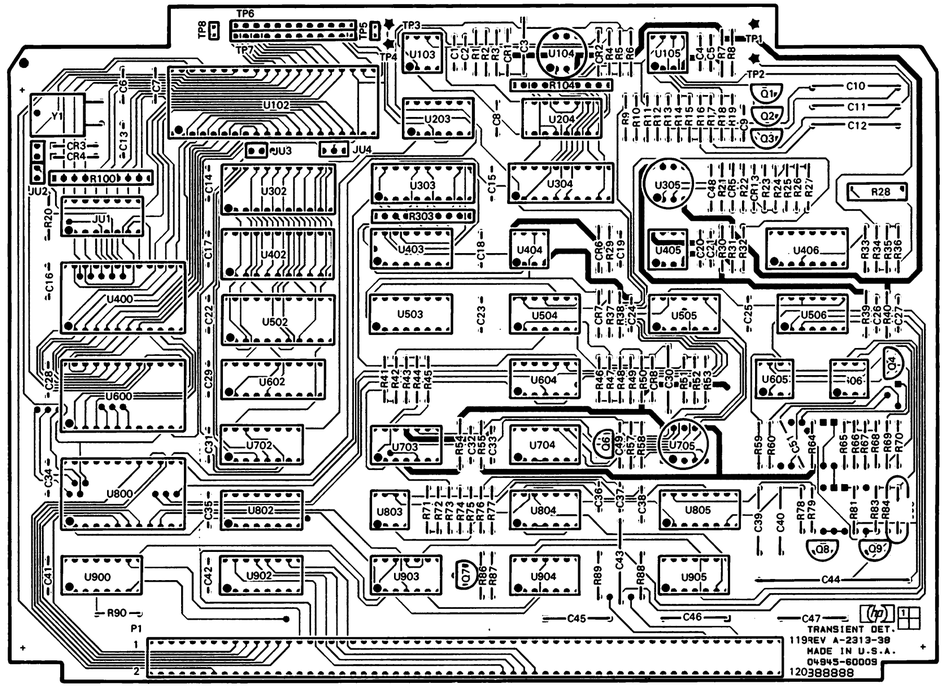

04945-60009 O-1/84 REV. A-2313

REPLACEMENT PAGE FOR 8-296

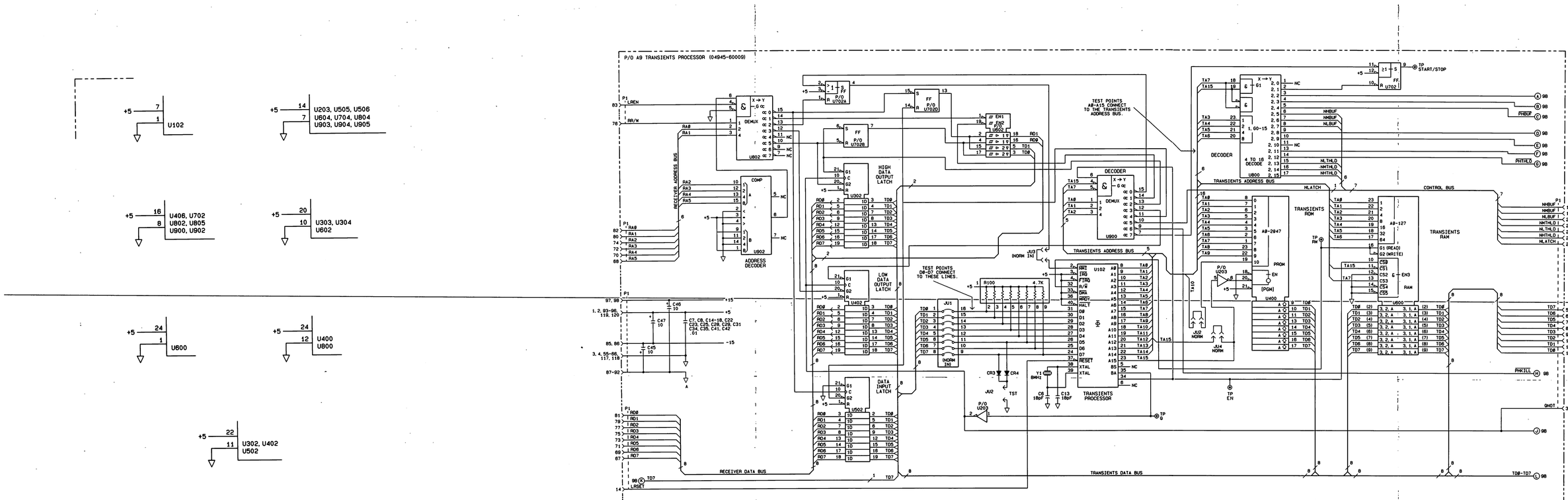

Figure 8-41. A9 Transients Detector Schematic Diagram (Sheet 1 of 2)

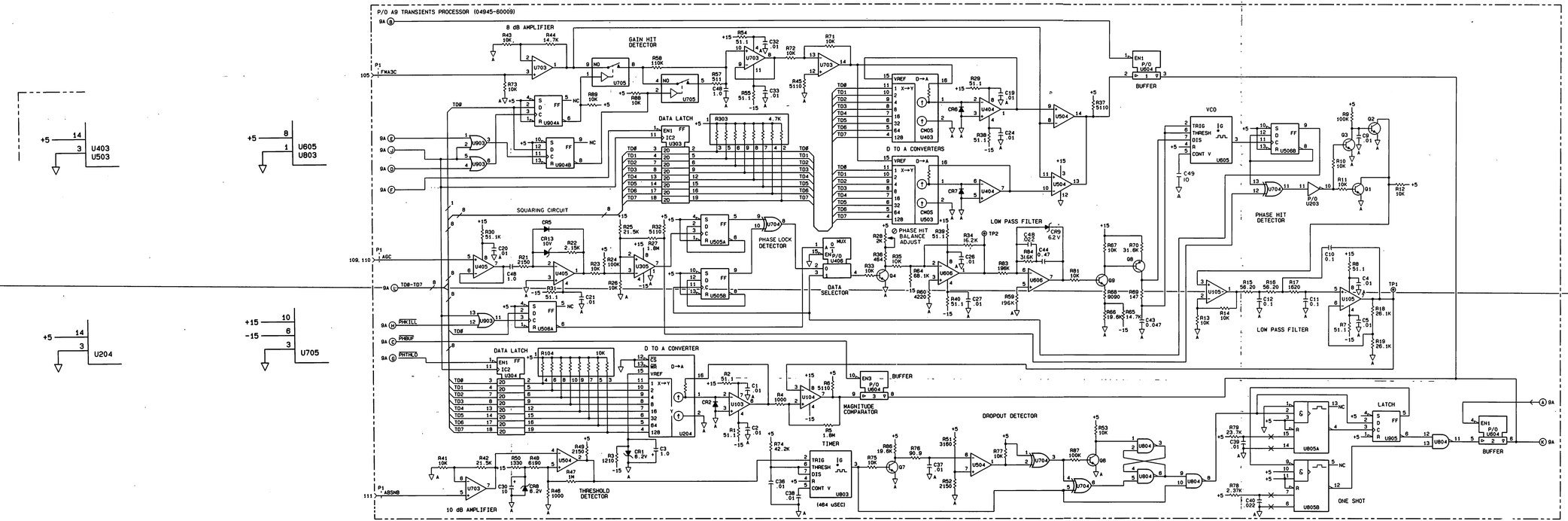

Figure 8-41. A9 Transients Detector Schematic Diagram (Sheet 2 of 2)

Transmitter

Transmitter

8-66. TRANSMITTER SECTION

The transmitter section is controlled by the System Processor. There are four boards in this section.

- A14 Transmitter Control (04945-60015)
- A15 Waveform Generator (04945-60016)
- A17 Active Output (04945-60017)
- A18 Transmitter Output (04945-60018)

Refer to the 4945A Block diagram, the individual board block diagrams and the schematic diagrams when reading this section.

8-67. Basic Transmitter Description

The transmitter digitally synthesizes the 4945A output waveforms. It is controlled through the system processor data bus by several latches which select frequencies, type of waveform and terminations. The output is routed through the Normal/Reverse relays on A58 to the 310 jacks on the front panel and to the speaker monitor/ amplifier.

All transmitted waveforms are generated by the same digital sampling technique. One complete period of the waveform (sine, PAR, SRL LO, ERL, or SRL HI) is quantized into 1024 evenly spaced time samples. Each sample is a number proportional to the voltage of the waveform at the given point in time. The numbers are scaled and translated so that the minimum voltage maps into 0 and the maximum voltage maps into 2^n-1, where n=10 for sine and PAR, and n=8 for SRL LO, ERL, and SRL HI.

The resulting numbers are stored in ROMs as sequential binary words. A programmable rate counter in the transmitter steps through the ROM addresses outputting the words to a 10 bit analogto-digital converter. This produces a stair-step approximation of the original waveform. The stair steps are removed by low-pass filtering, leaving a smooth duplicate of the desired waveform. With a sine wave, different frequencies can be obtained by changing the speed of the programmable rate counter.

A variation of this technique is used to generate signals which are the sum of two or four sine waves such as IMD check or IMD. In this case up to four programmable rate counters alternately address the waveform ROMs. Each counter can be programmed for a different frequency, and because each counter addresses the same ROMs, the DAC output looks like a sum of sine waves whose frequencies correspond to the counter frequencies.

If two tones of different amplitudes are required (as in FSK) a second DAC can be switched in to the ROM outputs in sync with the second rate counter. The output of this DAC can be attenuated before it's added back to the main signal through an analog summer.

Once the main signal has been generated it passes through a series of programmable attenuator stages which adjust the level under control of the system processor. Then the signal enters a balanced active output stage and goes through a series of relay selected impedances to the front panel. Other functions such as HOLD, DIAL/TALK, and TK BATT are also relay selected at the output terminals by the system processor.

8-68. Transmitter Control (A14)

The transmitter controller board is the communication link between the transmitter (A18) and the system microprocessor (A11). It consists of four main sections: transmitter contol, fractional-N synthesizer, Master/Slave FSK control, and envelope delay modulator.

Transmitter control is directed through A14 by the system processor. Address decoders on the A14 provide enable signals to the various control latches throughout the transmitter boards. Inputs to the latches come from the system data bus buffered on A14 (U803) and are routed to the remaining transmitter boards as the transmitter data bus.

The fractional-N synthesizer is the heart of the waveform generator. It has up to four programmable rate counters which sequentially address the waveform ROMs to produce the desired output signals.

Master/Slave FSK control comes from the system processor via the ACIA chip. The output of the ACIA controls the output frequency of the transmitter.

For Envelope Delay measurements an 83.3 Hz modulation tone is generated. This frequency is divided down on A14 and shaped into a sine wave for input to the modulator circuit on A15.

Fractional-N Synthesizer

The fractional-N synthesizer consists of the frequency latches, a full adder, address latch, and address accumulators. The frequency latches (U402, U403, U404 and U405) are four, sixteen bit latches initialized by the system each time a new transmitter output is requested. At the start of a transmitter clock cycle, the outputs of one of the four latches is fed into the full adder (U300, U302 - U306) where it is summed with the contents of its corresponding address accumulator (U200, U202 - U206). The 24 bit sum is clocked into the address latch (U101, U104 and U105) on the mid-cycle clock transition. At the beginning of the next cycle the output of the address latch is clocked back into the address accumulator.

The result is that each cycle increments an address in the accumulator by its index in the frequency latch. Since the clock is fixed, the address stepping rate and the output frequency is determined by the index stored in the frequency latch.

All four frequency latches and address accumulators are used only when transmitting the IMD signal, which is a sum of four sine waves of different frequencies. In that case the system initializes each frequency latch to one of the four frequencies and sets a control latch for four-tone tansmission. The transmitter clock is divided by two and then divided by two again so that each of the four latches and accumulators is cycled in sequence. The accumulated addresses presented to the waveform ROMs on A15 correspond to the first freqency, the second, the third, the fourth, and then the first again. In this mode, it is desirable to reduce the rate at which the address sequence to the ROMs repeats itself. This is accomplished by a clock which drives the least significant bit of the adder at one fourth the transmit clock rate. This results in each address being bumped by one bit every fourth cycle and extends the repeat time from 32 seconds to 512 seconds.

Other signals require that two sines be transmitted simultaneously or that a single series of addresses (for a single sine, PAR, or return loss) be generated. In that case only one or two of the four latches and accumulators are cycled but operation is the same as for four tones.

The transmit clock for the synthesizer is derived from either the binary clock crystal oscillator (U400) or from one of the system processor clocks. The binary clock is divided down from 4.194304 MHz to 1.048 MHz, 524 kHz, 262 kHz (for the frequency counter board, A8) and 131 kHz. The system 1 MHz clock is divided down to 20 kHz and 10 kHz (U700), and a 16 kHz clock comes from A11. All of these clocks go to the multiplexer U600 where the best frequency for the given output signal is selected by the system processor through the transmit control register U803.

Master/Slave FSK Control

Master/slave Frequency-Shift Keying (FSK) operates the synthesizer in the two tone mode where the two tones selected are controlled by the ACIA chip (U901). When doing FSK, a 1900 Hz pilot tone is transmitted at all times and a second tone at 800 Hz or 1200 Hz indicates whether a mark or space is being sent. The frequency latches are programmed for 1900, 800, 1900, and 1200 Hz respectively. Ordinarily only the first two latches are cycled in the two tone mode, but in FSK mode the output of the ACIA selects whether the first two latches or the second two latches get cycled. The system processor controls the ACIA to transmit marks and spaces to another 4945A in the same code as other TIMS units. The ACIA receives decoded data from the modem on A3 for communication to the system processor.
The 83.3 Hz modulation tone needed for envelope delay transmission is created on A14. The system 16 kHz clock is divided down to 1333 Hz and 83.3 Hz (U603, U703). These two clocks drive an eight bit shift register (U804). The sixteen times clock shifts the data through the register and the 83.3 hz clock is the input data. When the parallel register outputs are weighted by the proper resistor values and connected to the input of level shifter low-pass filter removes the steps to leave a minimally distorted wave which is routed to A15 for addition to the main channel under control of the A14 latch.

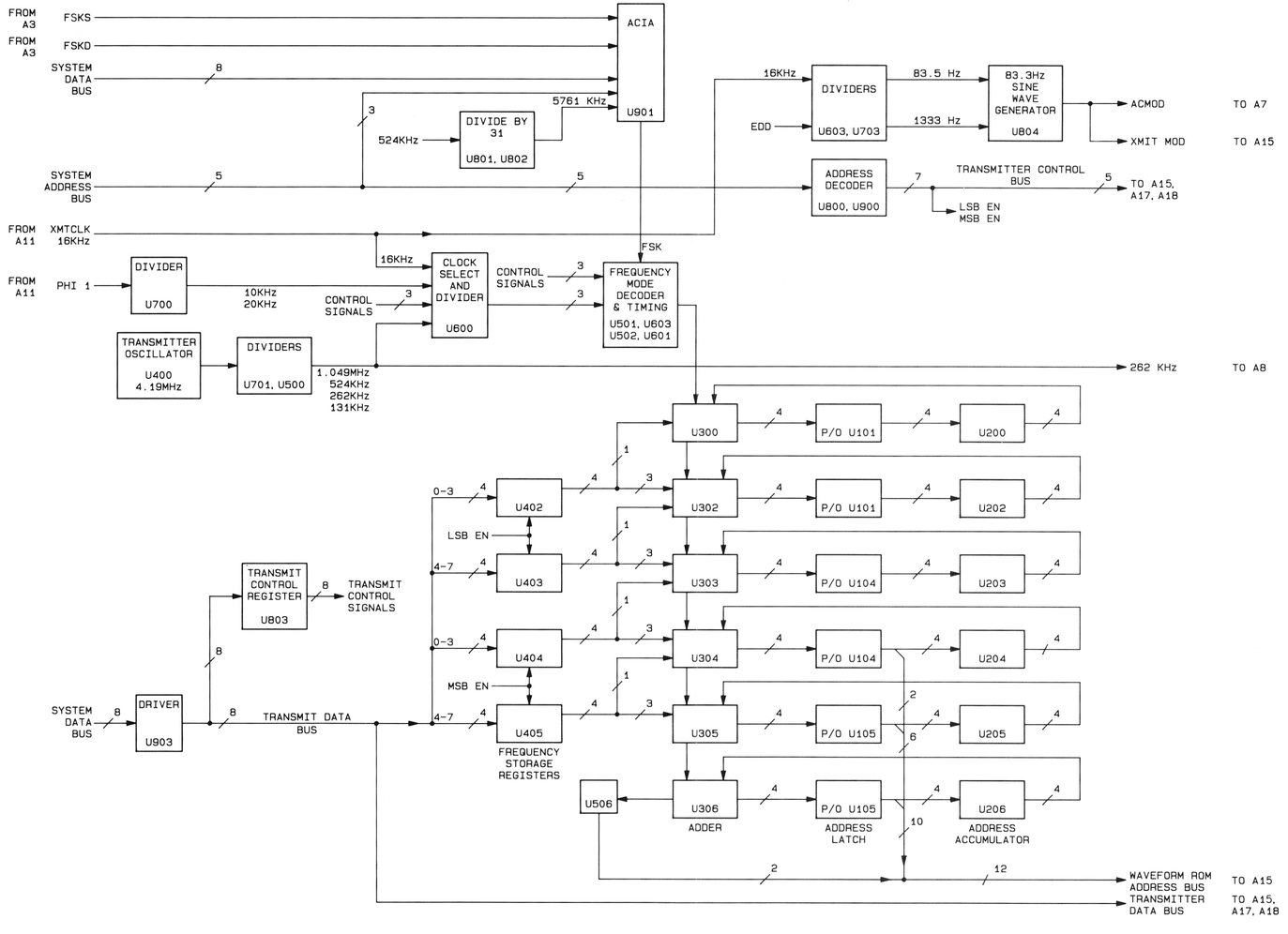

Figure 8-42. A14 Transmitter Control Block Diagram

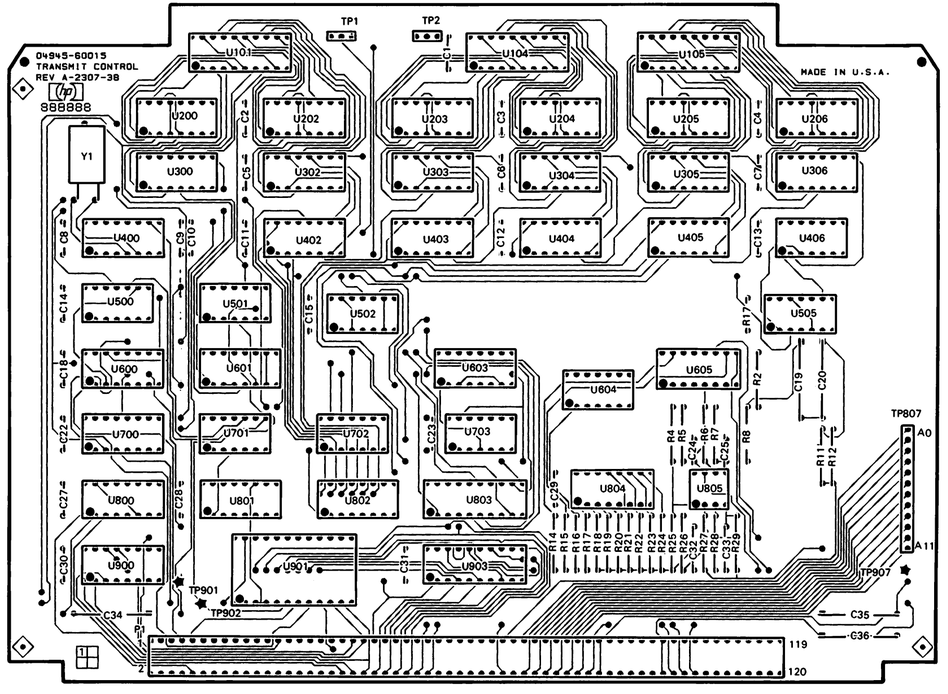

04945-60015 O-9/83 REV. A-2307

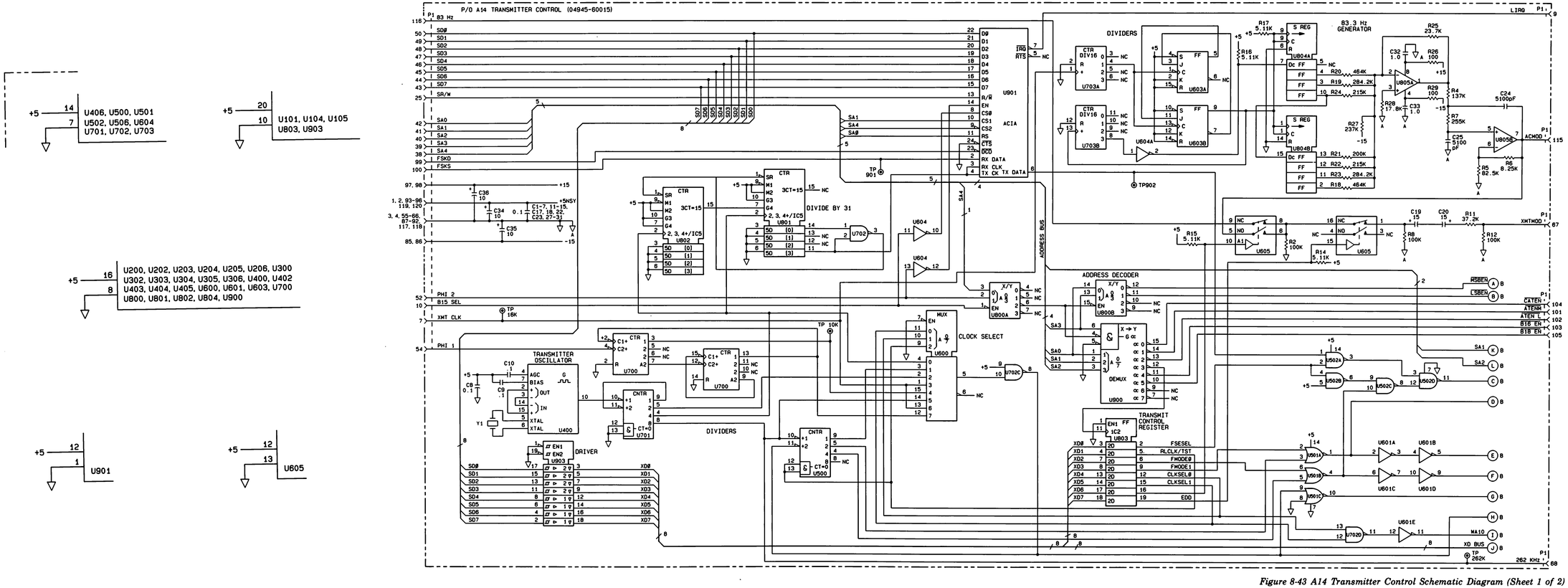

Figure 8-43 A14 Transmitter Control Schematic Diagram (Sheet 1 of 2)

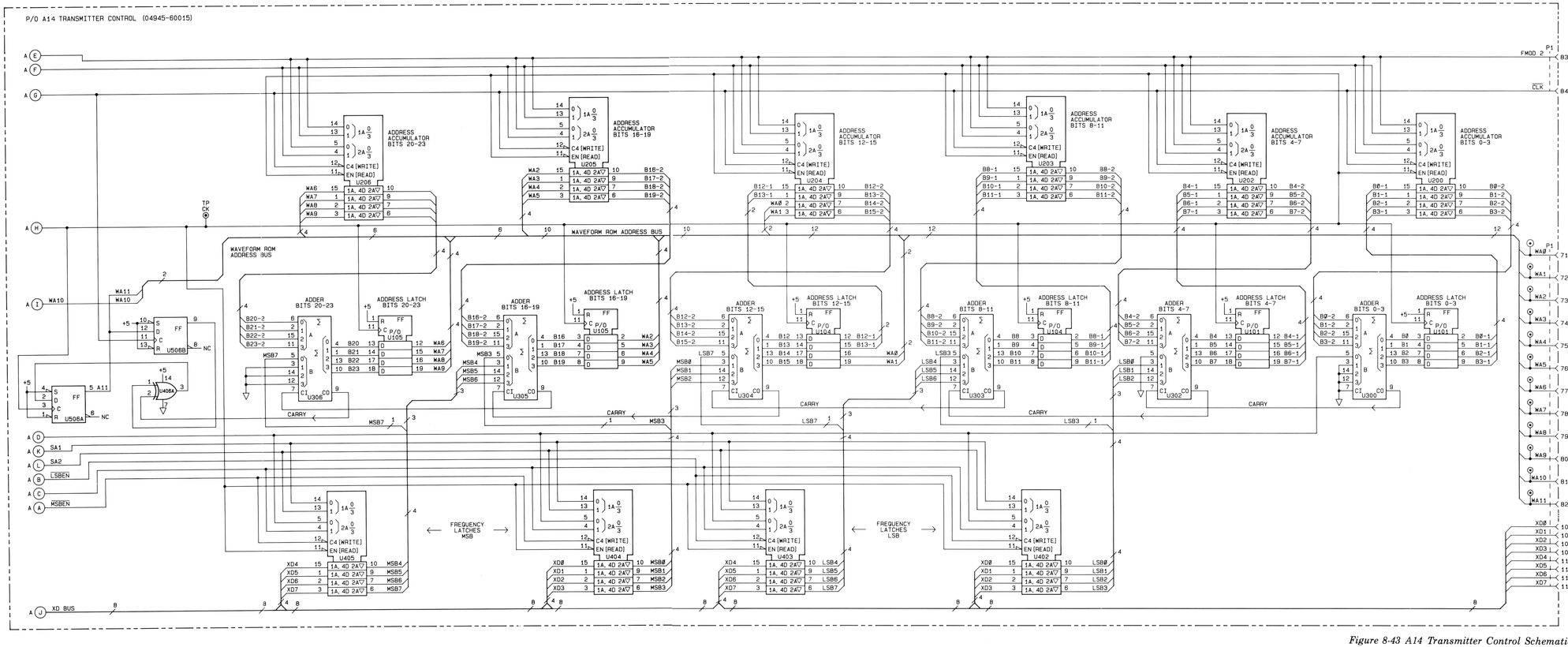

Figure 8-43 A14 Transmitter Control Schematic Diagram (Sheet 2 of 2)

8-69. Waveform Generator (A15)

A15 contains the digital to analog conversion portion of the digital waveform synthesizer and all the analog filter sections for the transmitter. The main parts of A15 are the main and alternate channel DACs, alternate channel filter and attenuators, output signal filter, and fine attenuator.

The two digital-to-analog convertors (DAC), U200 and U204, convert addresses from the fractional-N synthesizer on A14 into stair-step approximations of the final transmitter output signal. The alternate channel makes it possible to generate a signal which is the sum of two sine waves at different amplitudes.

Signals in the alternate channel can either be low-pass filtered or attenuated before being added to the main channel. The lowpass filter removes distortion products created by the rapid frequency shifts in Master/Slave transmissions. The attenuator reduces a sine wave to 20 dB below the main channel sine wave for phase jitter calibration.

Since the DACs only produce stair-step approximations of waveforms, several low-pass filter sections are required to remove high frequency distortion products and smooth the DAC output. The cutoff frequency of the selected filter depends on the frequencies and distortion specifications of the output waveform.

Fine attenuation at the A15 output provides software control of the output level for 0 to 9.9 dB in .1 dB steps. When used with the coarse attenuators on A17, it allows transmitter level control from -75.0 dBm to +13.0 dBm in .1 dB steps.

Digital to analog Conversion (Main Channel)

The digital to analog conversion sections consist of the waveform control register (U602), waveform ROMs (U402 and U502), data selectors (U301 and U401), data latches (U300 and U400) and DAC (U200). The system controller selects the waveform. The waveform code is input through the control register U602 and the decoders U500 and U501. The outputs of the decoders control the two most significant address lines to the ROMs, selecting one of the five, 1K-word waveform segments. The lower ten address lines are driven by the fractional-N synthesizer on A14, which steps through the ROM's data words sequentially at a rate proportional to the frequency or frequencies being transmitted.

Two of the transmitter waveforms (sine and PAR) require ten-bit words to give an adequate signal reproduction. These are stored with the eight most significant bits in ROM1 (U402) and the two remaining bits in the upper two bit positions of the corresponding 1K segment of ROM2 (U502). Each ten-bit word is clocked into the data latches U300 and U400 by the fractional-N synthesizer clock from A14 at the end of a cycle. The latch outputs drive the main channel DAC which converts the ROM data into analog voltages to

produce a stair-step approximation to the desired output signal. If Envelope Delay signals are being generated, the modulation tone from A14 drives the reference input to the DAC, thereby superimposing itself on the DAC output.

The three distributed noise signals used for return Loss measurements are produced in the the same way but have word lengths of only eight bits. Two of these signals are stored in 1K segments of ROM1 while the other is in a 1K segment of ROM2. When either of the first two signals is accessed the two least significant bits of the ten-bit latch are cleared and the eight most significant bits are taken from the outputs of ROM1. If the third signal is selected, the multiplexers U301 and U401 switch the latch inputs for the most significant eight bits to ROM2 and again the two least significant bits are cleared.

The alternate channel operates the same as the main channel except that it only converts the eight most significant bits of the waveform and is restricted to outputs from ROM1. It is only used when transmitting two simultaneous sine waves of different amplitudes, which means only FSK or phasejitter calibration. When activated by the system processor through the control latch, the alternate channel latches and converts every ROM output corresponding to the second (lower amplitude) tone while the main channel latches and converts the ROM outputs corresponding to the first tone. The alternate channel signal then passes through one of two paths: a 20 dB attenuator or a 1200 Hz low-pass filter with 3 dB of attenuation. The attenuator path is used when the control latch selects the phase-jitter calibration signal and the latter when it selects FSK. The output of the selected path is then added back to the main channel by the analog adder circuit at U101.

Once the stair-step approximation of the total waveform has been produced by the DACs, one of several filters can be selected to remove the steps and other incidental noise in the signal. For single sines the 175 kHz third order low-pass (U203) is adequate. If two sines or the PAR signal are being generated, the third order 5 kHz low-pass must be selected. The Return Loss noise signals require an additional 2.5 kHz low-pass section to be cascaded with the 5 kHz filter (U102). For the four tone case (IMD) where noise must be particularly low, a band-pass filter centered around 1100 Hz is used (U104, U206 and U306).

If the instrument is the Slave in the Master/Slave mode it may need to retransmit its received signal to the Master. If so, the received signal may be switched in instead of the filtered transmitter output at this point. The selected signal then goes to the reference input of another ten bit DAC (U506) which acts as a programmable fine attenuator. The ten DAC inputs are driven by the system processor through latches U504 and U604. Constants calculated by the system can thus attenuate the output signal by 0 to 9.9 dB at a .1 dB resolution before it goes on to the coarse attenuators and active output stage on boards 17 and 18.

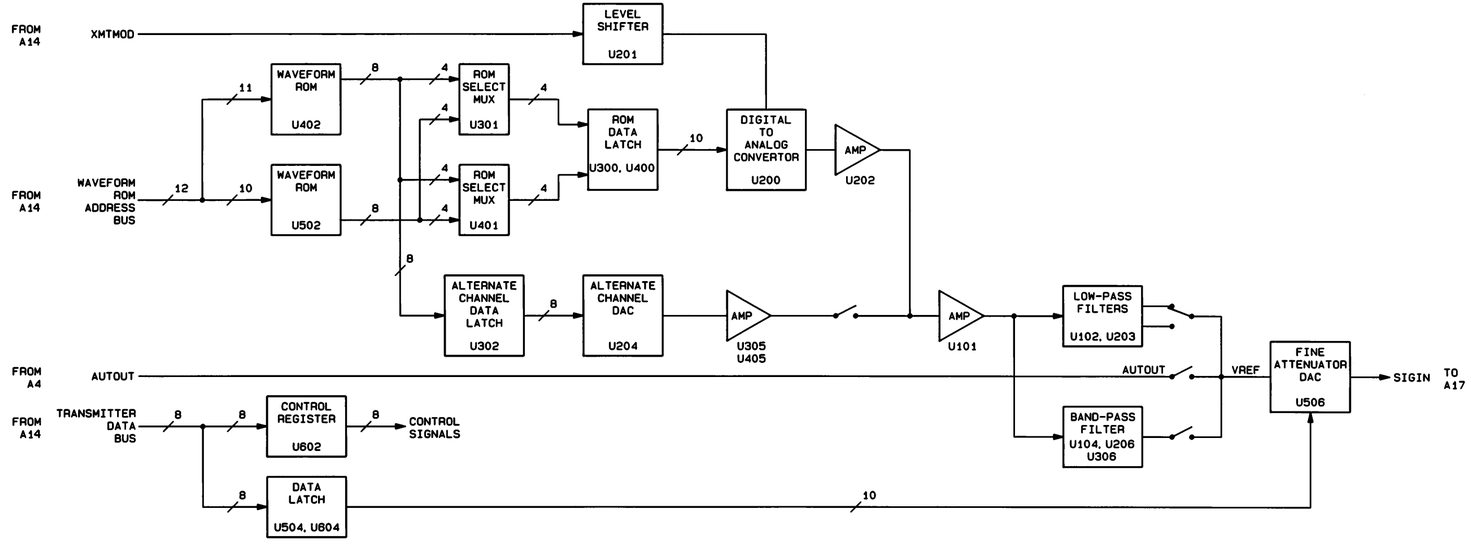

Figure 8-44. A15 Waveform Generator Block Diagram

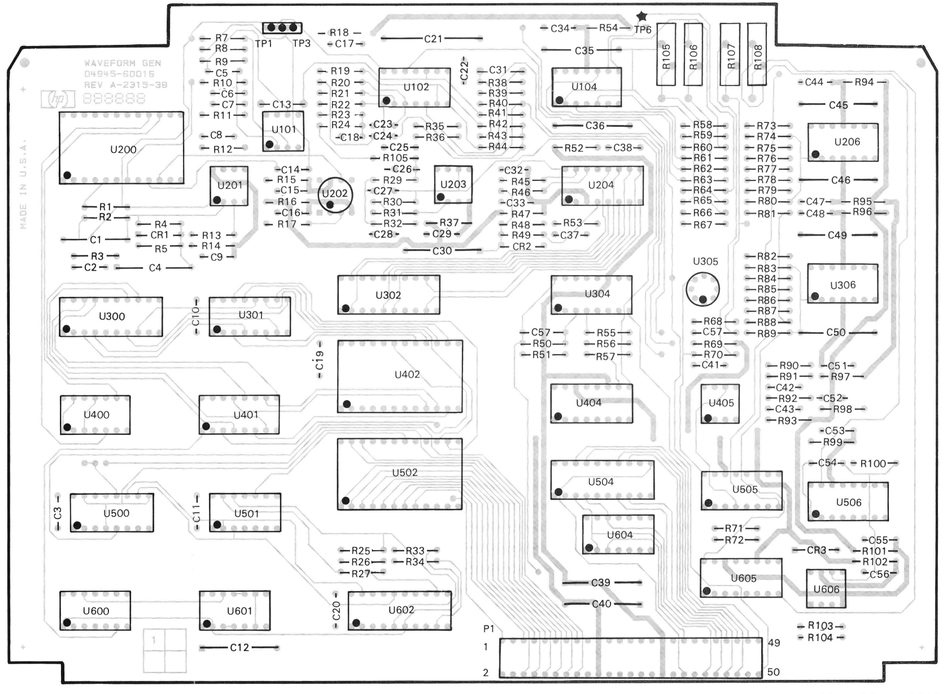

04945-60016 O-9/83 REV. A-2315

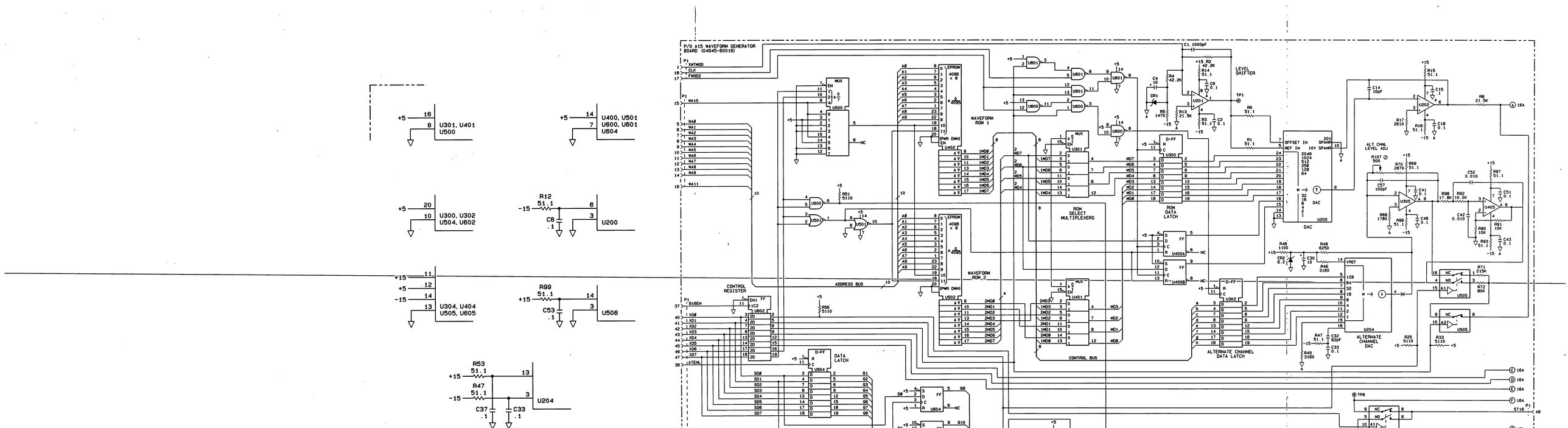

Figure 8-45. A15 Waveform Generator Schematic Diagram (Sheet 1 of 2)

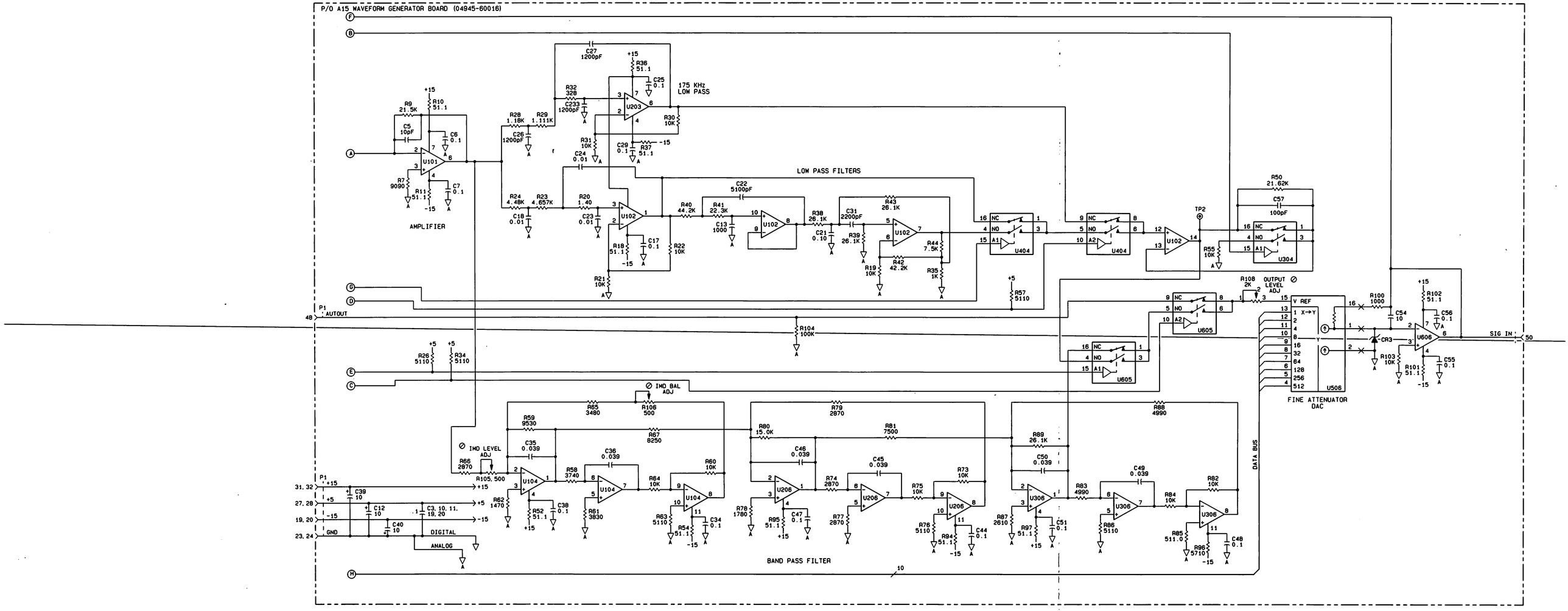

Figure 8-45. A15 Waveform Generator Schematic Diagram (Sheet 2 of 2)

8-70. Active Output (A17)

Control signals on the system data bus from the system processor are latched by U608. These signals control the analog switches. The switches control the attenuation, the talk battery and quiet termination. There is 80 dB of attenuation available in 10 dB steps.

The Talk Battery is a 15V supply which is routed to the user's handset through the switching on A18. For Quiet Termination, the transmission path is opened after the attenuators and the tip and ring are also grounded.

After the attenuator (U409), the signal goes to a buffer, U407. U309 and U310 convert the single ended signal into a balanced differential signal. It also provides a large impedance to ground both differentially and in common mode.

The differential voltage from U309 and U310 is applied to a voltage to current converter (Q1, Q2, Q4, Q11, Q14 and Q15). This is an isolation stage and it creates the differential floating output. The bias for this stage is created by Q10 and CR3. At near dc levels, the output of the convertor looks like low impedance. At high frequencies the converter feedback loop (U306) is non-functional and the converter looks like high impedance. Over the instrument's frequency range, the output impedance of the converter varies with the frequency. The current output from this stage is converted back to a voltage by amplifiers U405 and U406.

The amplifiers are powered by an isolated, floating power supply. The transmitter output is floating within this +-15 volt window. Protection diodes on the transmitter output lines (AOT, AOR) protect the transmitter circuits against transient voltages more than +-100 volts.

Floating Supply

The +- 15 volt floating supply inputs come from the +- 40 volt supply on the A21 board.

This supply provides clean, isolated voltages to the transmitter output stage. Q8 acts as a current source and Q9 acts as a current sync. CR12 ensures that there is always a 30 volt differential at the output, even though the actual voltages may be +-15 volts.

Q5, Q6, Q12 and Q13 provide feedback to keep the +-15 volt outputs (30 volt differential) within the limits of the +-40 volt input.

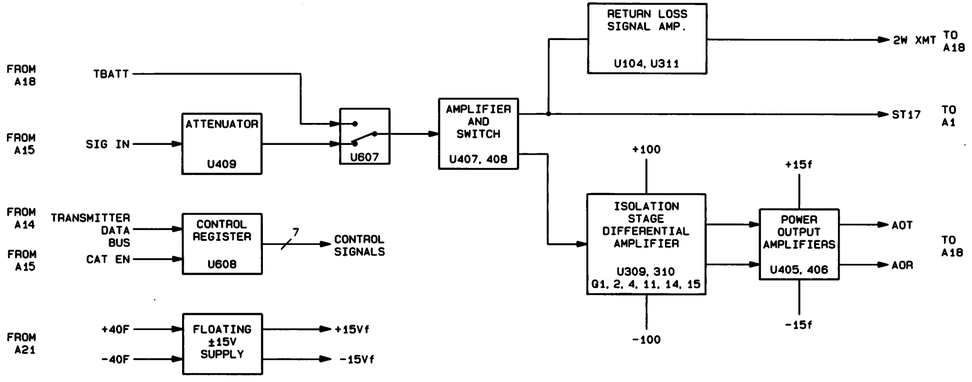

Figure 8-46. A17 Active Output Block Diagram

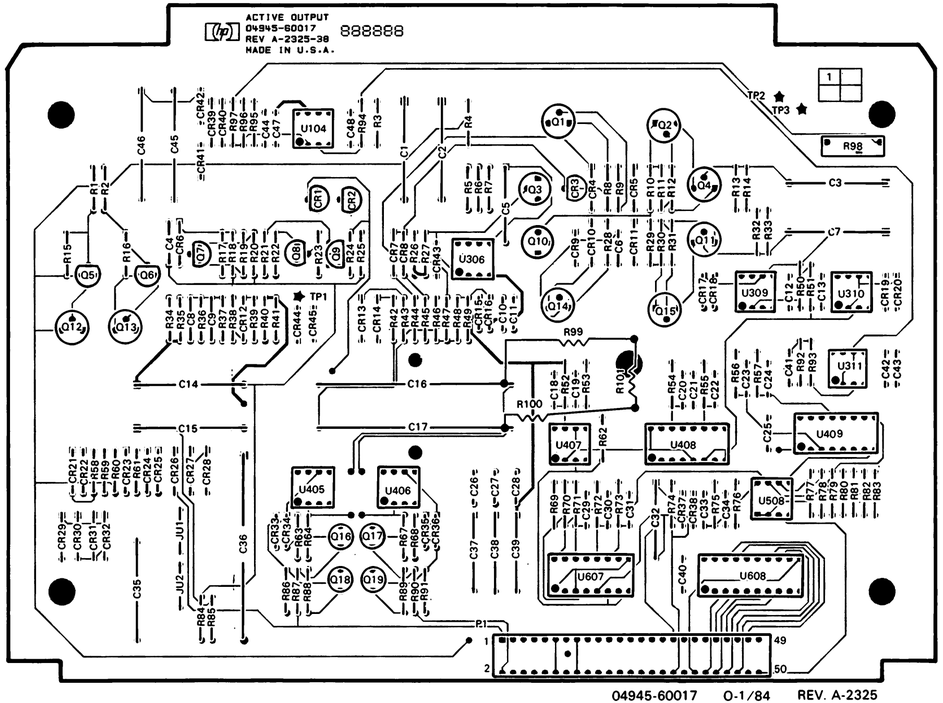

04945-60017 O-1/84 REV. A-2325

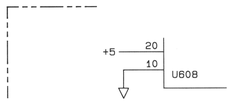

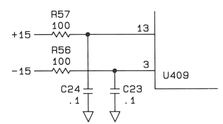

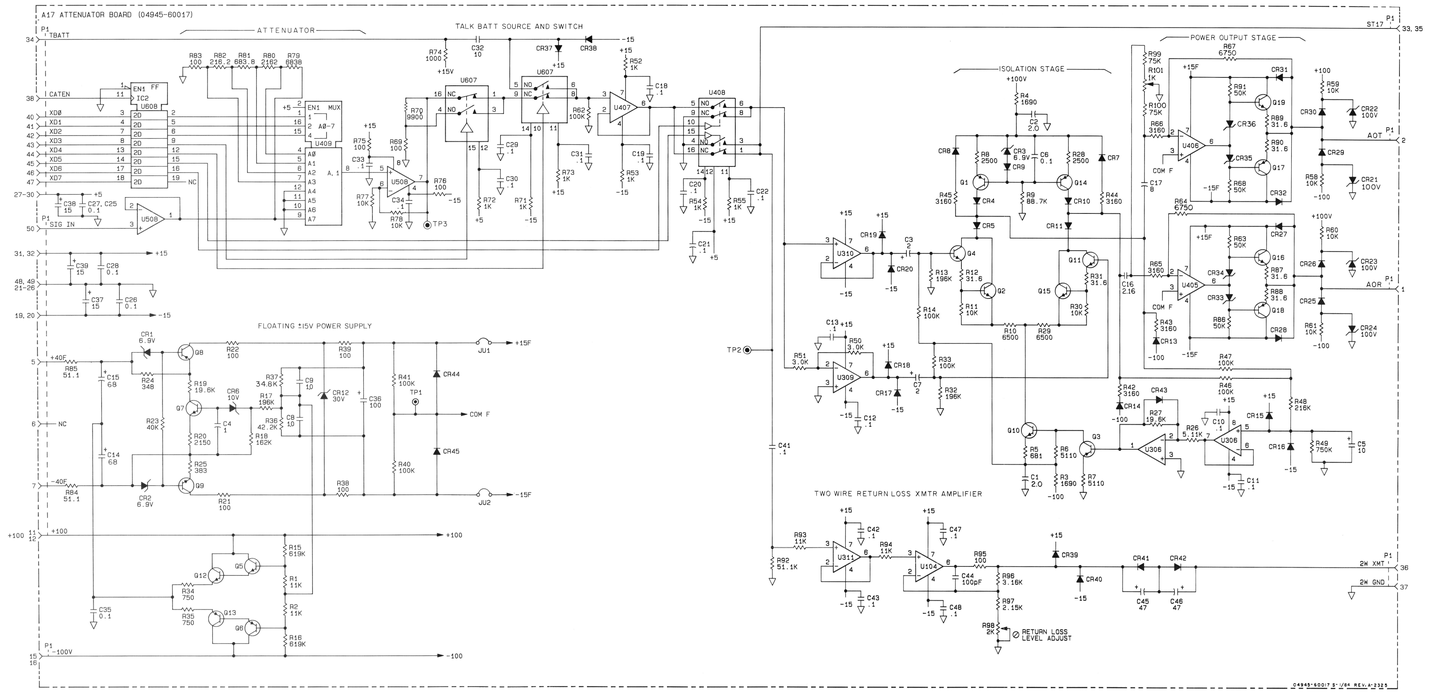

Replacement For Figure 8-47. A17 Active Output Schematic Diagram

8-71. Transmitter Output (A18)

Line terminations of 135, 600, 900 and 1200 ohms can be selected for the transmitter output.

The AOT and AOR inputs are from the current booster stages on A17 which have an extremely low output impedance (approximately 0 ohms). Therefore AOT and AOR look like a short circuit.

For a 1200 ohm impedance, relay K304 is closed and K305 is opened putting R11 and R15 in series (600 ohms each). For 600 ohms, K304 is opened which puts R13 and R17 in parallel with R11 and R15 For 900 ohms, K305 is closed to put 3.6 K ohms (R14, R18) in parallel with 1.2 K ohms. For 135 ohms, K304 and K305 are closed to put 151 ohms in parallel with 1.2 K ohms.

K306 is used to put either the return loss bridge or the termination impedances onto the tip and ring connectors.

K302 shorts the tip and ring for return loss calibration. This produces a 0 dB return loss. The return loss is read by the 4945A receiver and any deviation is calibrated out by software.

K303 selects one of the standard return loss impedances (600 or 900 ohm) in series with a 2.16 UF capacitor.

K301 controls whether the return loss bridge is using one of the standard impedances or the external reference impedance.

K307 switches in the dc blocking capacitors when one of the internal references are used.

Dial talk and talk battery options are controlled by K308 and K309. When dial talk is used, voice is connected directly to the 4945A front panel jacks. The voice signal comes in to A18. K308 and K309 are set up so that the voice goes directly out on the tip and ring. When using the talk battery option, the handset is energized with 15 Vdc which is generated on A17 (TBATT). The voice signals now take a more indirect route before going out on the tip and ring.

The transmit hold coil circuit is switched in by K310.

The relay switching is controlled by control information coming to the A18 board on the transmit data bus (XD0 thru XD7). The transmit data bus is buffered by U504. The bus information is decoded by U501, U502 and U503. The decoder outputs are sent to the bases of driver transistors which are turned on to either set or reset a relay. The relays are the type that require a set or reset signal to change states. The relay stays in the position that the last drive signal set it to.

The two I/O connectors are also part of A18. This part of A18 is discussed in the I/O section.

Return Loss Circuit

The return loss measurement is a measure of how close the line impedance is to the "standard" impedance of 600 or 900 ohms in series with a 2.16 uF capacitor.

The return loss bridge equivalent circuit is shown below. In the 4945A, R22 and R23 are the Rx legs of the bridge. R9 or R10 in series with C6 is the Z-ref leg and the transmission line impedance is the Z-load leg. An external reference can be switched in to replace the "standard" impedance.

Note: Disconnect any voltage source from the external reference connectors when using the internal references.

T1 is used to provide a floating voltage source. It has low winding resistance and is driven from a low impedance source (A17 U104) on A17. CR27 is a low voltage surge suppressor.

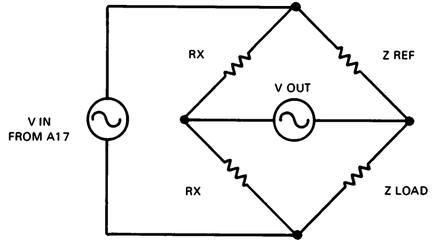

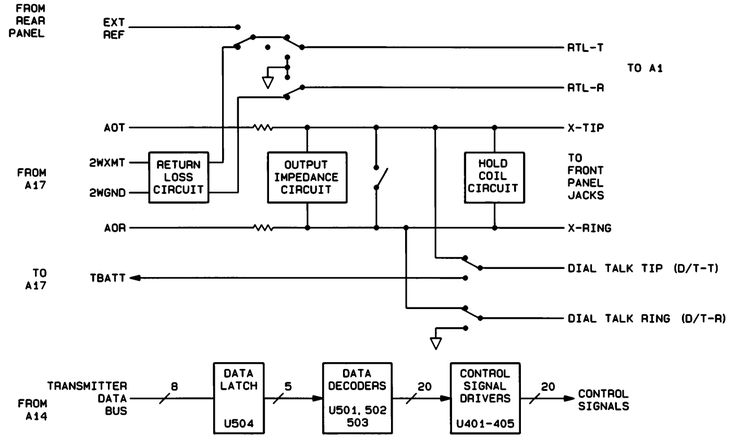

Figure 8-48. A18 Transmitter Output Block Diagram

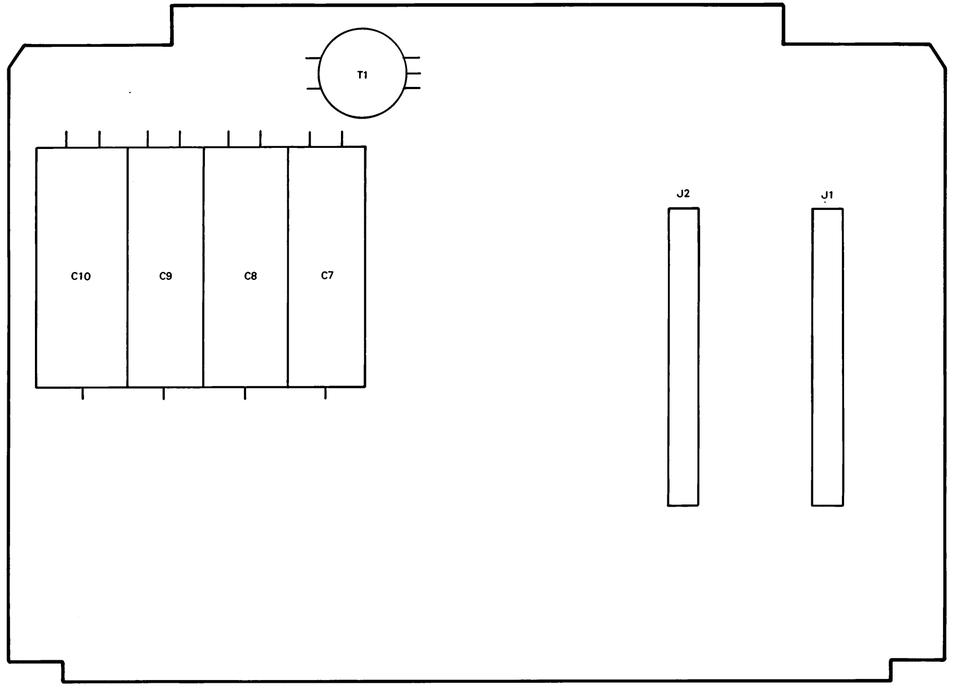

04945-60018 O-9/83 REV. A-2326

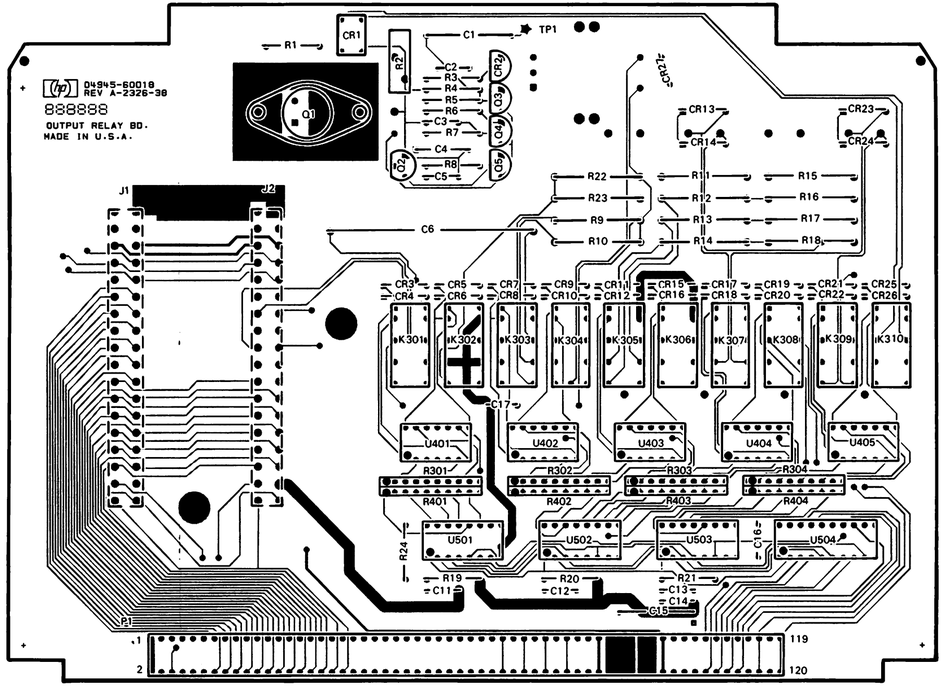

04945-60018 O-9/83 REV. A-2326

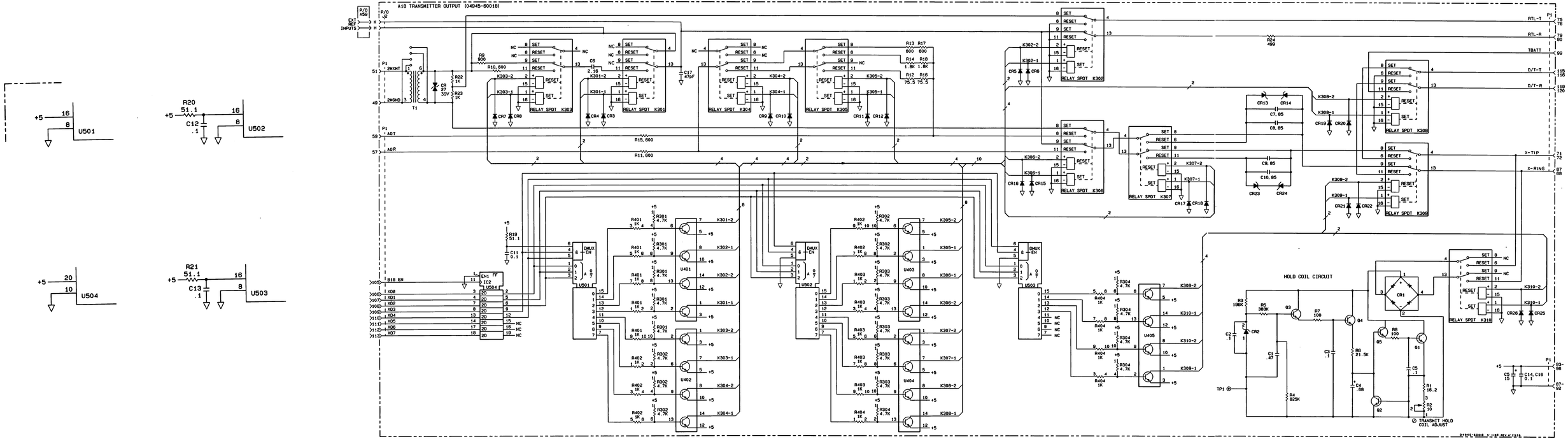

Replacement For Figure 8-49. A18 Transmitter Output Schematic Diagram

8-72. DISPLAY SECTION

The Display section is controlled by the System Processor. There are three major assemblies in this section.

- A13 Video Generator (04945-60013)
- A19 CRT Driver (04945-60019)
- CRT/Yoke assembly

Refer to the 4945A Block diagram, the individual board block diagrams and the schematic diagrams when reading this section.

8-73. Video Generator (A13)

The video generator generates video drive signals which are sent to A19 where they are modified as necessary before going to the display. The display is a non-interlaced raster scan consisting of 24 rows of 42 characters. Characters are 5 dots by 9 dots within an 8 dot by 12 dot matrix.

Although the block diagram for A13 contains many blocks, the board can be broken up into six categories- CRT controller, Address Control, Horizontal and Vertical Sync, Display Memory, Video Generation, and Monitor Circuit. Timing considerations are also discussed.

CRT Controller

A13 is controlled by the system processor (A11) through the CRT controller (CRTC U702). The A11 board programs the CRTC for the number of characters per row, vertical and horizontal frequencies, cursor position, etc. via the bidirectional data bus (SD0-7), and control lines R/W, CS, Reset, and Enable. The CRTC outputs are:

- HSYNC - A 20 KHz signal that determines the horizontal position of the displayed text.
- VSYNC - A 60 Hz signal that determines the vertical position of the displayed text.
- DE - Active high signal which indicates that the CRTC is providing addressing for the active display area.
- CURSOR - Active high signal which is generated by an internal register of the CRTC when its contents equal the current refresh memory address.
- MA0-9 - Ten refresh memory address lines that represent the address of the character cell on the display.

- RA0-3 - Four row address lines that are used to address the character generator and external character ROM, and represent the scan line of a particular character cell.

- SD0-7 - Eight bidirectional data lines that represent both character and attribute information.

Address Control

The display memory access is shared between the system processor on A11 and the CRT controller (A13). The system has access while the PHI 2 clock is low and the CRT controller has access while the PHI 2 clock is high. The access is accomplished in part by multiplexing the address bus to the display memory. Multiplexers U801, 802 and 803 are switched by the PHI 2 (inverted) clock, to choose between the system processor addresses (SA0-10) and the CRT controller addresses (MA0-9). The chip selects to the attribute and character RAM (U503 and 502) are derived so that the chips are always selected while PHI 2 is low (i.e. during the CRT controller's access window) and are selected when PHI 2 is high only when A11 is addressing the chips. The chip select for the display RAM is gated in the same way, although the individual chip selects do not come directly from the A11 board. The A11 board generates a chip select, LGRAM, for the entire 12K of dispaly RAM. This chip select, gated with PHI 2, is used to enable a decoder, U200, whose inputs are the multiplexed row addresses and system addresses and whose outputs are the individual chip selects (CS1-6) to the RAM.

Horizontal and Vertical Sync

The horizontal and vertical sync pulse frequencies are programmable by the CRT controller. The horizontal sync pulse is passed through a monostable (U100) to modify the duty cycle to meet constraints set by the analog sweep circuits on A19. The vertical sync pulse doesn't need any modifications.

Display Memory

The system data bus ties directly to the CRT controller, but is separated from each of the character, attribute, and graphics memory data busses by a transceiver (U605, U705 and U405 respectively). The character data bus (CHD0-6) along with the row addresses from the CRT controller are used to address the external character ROM (U501). The data from the ROM are the dot row, dot patterns for the specified character. These patterns drive the B inputs of multiplexers U302 and U402. The attribute data from the attribute RAM drives the attribute and mode inputs to the character generator, U303. This bus contains blink, inverse video, underline, strike-thru, and character blank attribute information and two mode bits. The display data bus consists of the data lines of the six display RAM chips (U102, U203, U205, U206, U305 and 306) driving the A inputs of multiplexers U302 and U402. The outputs of the data multiplexers are the address inputs to the character generator chip.

Video Generation

The video signal is generated by the character generator U303. It generates a dot sequence according to the information on its address inputs, and modifies the dot sequence according to the attribute inputs, cursor enable (CURSOR), and display enable (RETBL). The attribute inputs contain blink (BLINK), inverse video (REVID), underline (UNDLN), strike thru (STKRU), and character blank (CHABL) attribute information. The 2 most significant bits of the attribute bus, MS0 and MS1, contain mode information for the character generator. It can be used in four different modes: alphanumeric, external, wide graphics, or thin graphics. Only the external mode is used presently, as determined by the hardware configuration of JU501. In the external mode, the 8 bit word from the external character ROM on address inputs V0-7, is used directly for dot generation. (In other modes rather than using the information on the address lines directly, the information is internally decoded).

The final dot sequence is shifted out at the rate of the dot clock (8 MHz) and passes through a level shifting and inverting circuit. The video signal goes to A19 as a TTL level signal.

Timing Considerations

Access of the A13 RAM is shared between the system processor on A11 and the CRT controller. This interleaving makes timing on A13 critical. The system processor has access to the display RAM when PHI2 is low, and the CRT controller has access when PHI2 is high.

The RAM address is obtained by multiplexing either the system address bus, SA0-10, or the CRTC address bus MA0-9. The PHI2 clock is used to switch the multiplexer. The CRTC bus addresses must be stable when the multiplexer switches to allow maximum RAM access time. The falling edge of CHCLK from A11 defines when the CRTC addresses are valid.

Each data bus for the character, attribute and display RAM is separated from the system data bus by a transceiver. The transceiversare enabled by ORing the transceiver enable signal LTRANSEN with corresponding RAM chip select, LATRAM, LCHRAM, or LGRAM.

Beep Tone Circuit

This circuit generates two beep tones to signal a pressed key and data entry errors. The circuit also monitors the transmitter output and receiver autorange output. The signal choice is made with an 8 to 1 analog multiplexer , U707. It chooses between 1 of 7 attenuated monitor signals, a beep tone, or off. U707 is off when nothing is being monitored and no beep tone is present. The two beep tones, 600 Hz for normal key contact and 1200 Hz for data entry errors, are generated by a dual timer, U406, in the astable configuration. These free running square wave oscillators are selected by one half of switch U606. The output drives one of the 8 input channels of U707. When it is desired to monitor the receiver or transmitter, the proper input is selected with the other half of U606. Depending on which of the 7 input channels is selected, the signal is attenuated accordingly to obtain some volume control. The output of U707 drives an audio amplifier, U706 , which has a fixed gain of 20 (26 dB). The amplifier is biased up to half the +5 volt supply limiting the output voltage swing to less than 2.5 volts. This output goes to a dc blocking capacitor which in turn drives the speaker.

A13 TP1 Mnemonics

TP1-1 VDC - 8 MHz dot clock for A13 character generator.

TP1-2 L/S - 1 MHz load/shift clock for A13 character generator. A positive going edge indicates parallel loading of data into the chip; low going edge indicates serial shifting of data onto video output.

TP1-3 VID - Video dot stream output from A13 character generator.

TP1-5 VSYNC - Vertical sync output from A13 CRT controller; determines vertical position of displayed text.

TP1-6 HSYNC - Horizontal sync output from A13 CRT controller and one-shot U100; determines horizontal position of displayed text.

TP1-8 SPKR - Audio amplifier output to speaker.

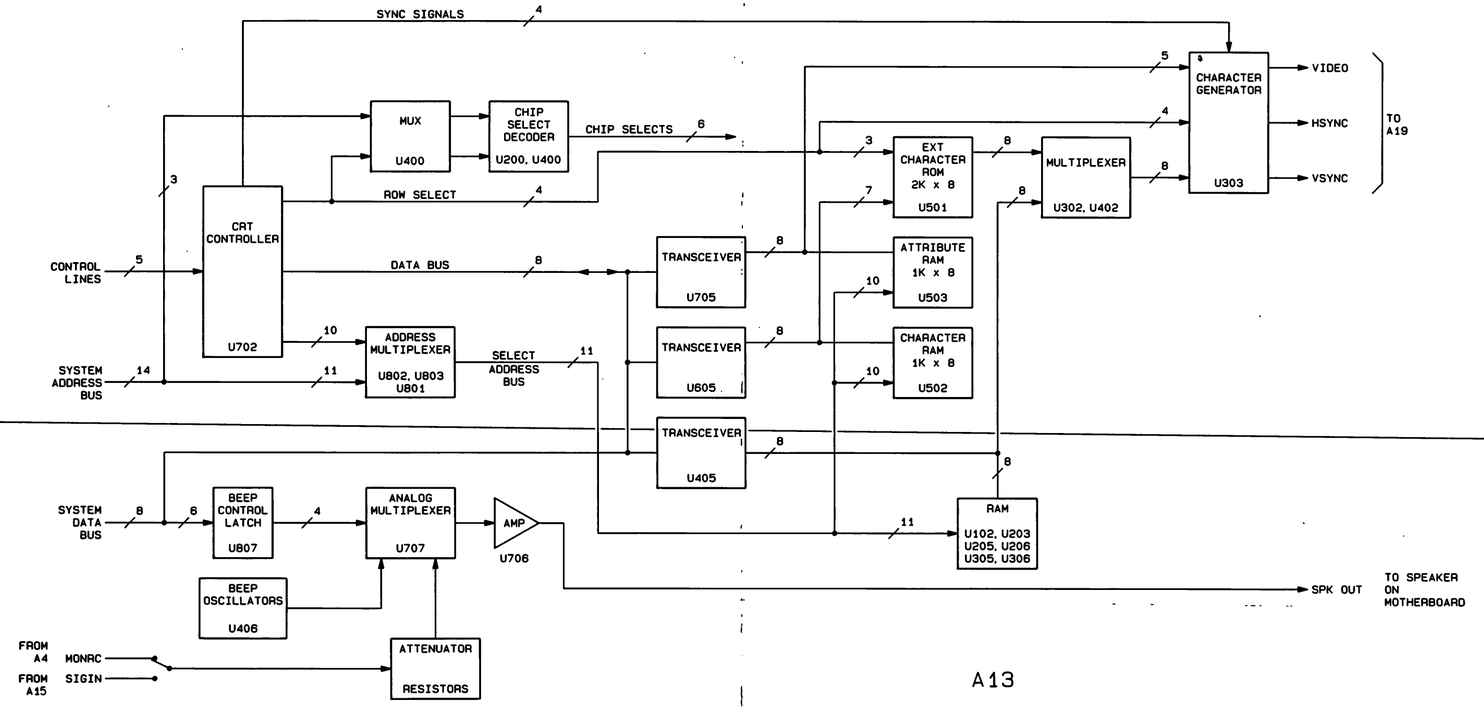

Figure 8-50. A13 Video Generator Block Diagram

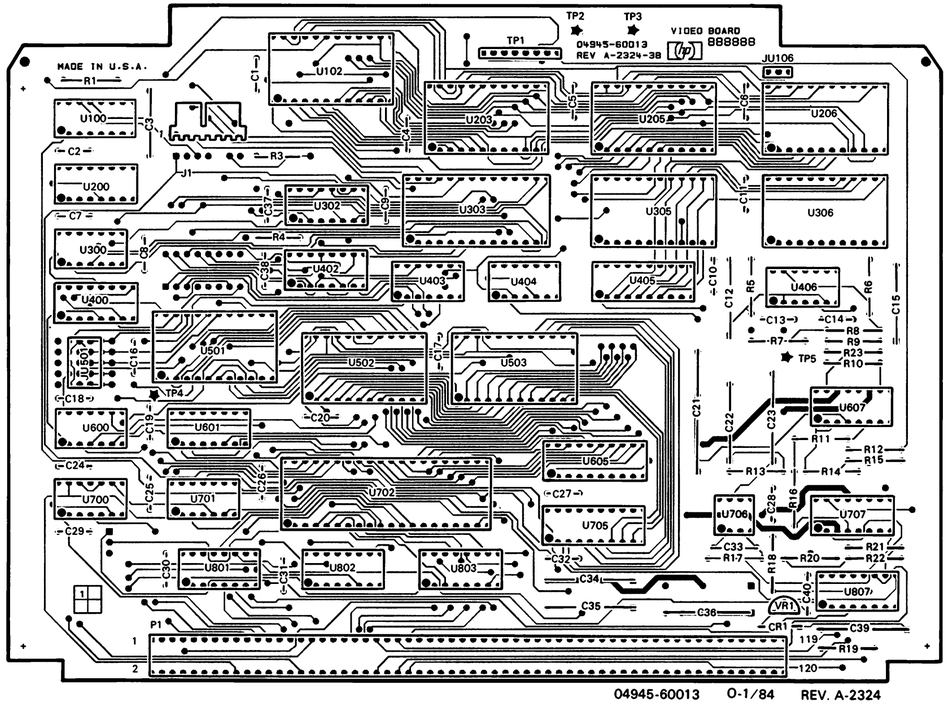

+5 — 12, 17 — U303

+5 — 14, 7 — U300, U403, U404, U406, U600, U700, U701

+5 — 16, 8 — U100, U200, U302, U400, U402, U601, U801, U802, U803, U807

+5 — 20, 1 — U702

+5 — 20, 10 — U405, U605, U705

+5 — 24, 12 — U102, U203, U205, U206, U305, U306, U501, U502, U503

+15 — 11; +5 — 12; -15 — 14, 13 — U606

+15 — 13; -15 — 3, 14 — U707

REPLACEMENT PAGE FOR 8-328

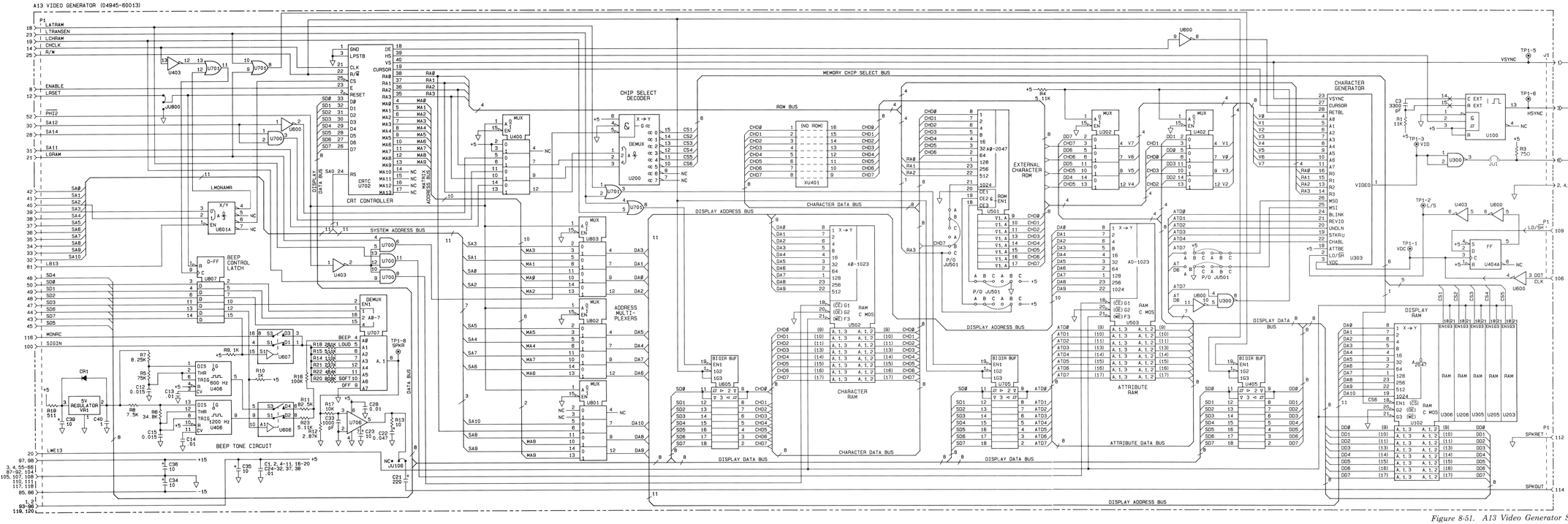

Figure 8-51. A13 Video Generator Schematic Diagram

8-74. CRT Driver (A19)

The A19 board receives the HSYNC (20 kHz), VSYNC (63 Hz) and VIDEO (TTL) signals from the A13 Video Generator. With these signals, the A19 board produces the necessary signals to drive the magnetic deflected, raster scanned, cathode-ray tube. The display format in the normal mode has 24 lines of 42 characters, and in the plot mode there are 336 pixels per scan line with 288 lines total.

Protection and Self Test

On initial power-up, the HSYNC and VSYNC input signals from the CRT controller on A13 are undefined. The protection circuit ensures that the drive signals that reach the other circuits are the proper frequency and duty cycle. The duty cycle is controlled by the dual monostable multivibrator U600; its outputs are designated HDRIVE and VDRIVE. HDRIVE is to have a positive pulse width of 25us, while VDRIVE is to be high for 500 us. The CLR input of U600 is controlled by the output of U104, which detects the frequency of the HSYNC signal. The CLR on U600 is released if HSYNC is within 10% of its 20 kHz value. If HSYNC is not present, or is not correct, the CLR is activated driving VDRIVE low, which keeps Q13 off, and HDRIVE is driven high, keeping U502's output transitors off. Thus, the proper frequency is assured on HDRIVE via U104, and proper duty cycle is assured by U600. It is assumed that if the HSYNC signal frequency is correct, then VSYNC is also correct.

Self-test function is provided by a dual timer, U102. Placing S1 in the TEST position disables the RESET on both timers, disconnects the incoming signals from A13, routes the outputs of the timer to the U600 and U104, and grounds the VIDEO line through R8. The "HSYNC" output of the timer is still checked by the U104 so that the board continues to be protected against erroneous frequencies. The VIDEO is tied low through R8 to produce a visible raster. In the RUN position, the timers are held off so that no unwanted "beat" signals are generated, and the inputs from A13 are routed directly to U104, U600 and Q2.

High Voltage

The high voltage section is a conventional flyback, dc-to-dc, voltage converter. The flyback transistor Q1 is driven by an isolated version of HDRIVE via T2 and U502. When Q1 is on, current flows from +12 Vdc through the T1 primary to -12 Vdc at pin 6 of T1. This stores energy in the T1 core, while current flows out of pin 7 (+30V winding) and into pin 3 via CR1 to create -80Vdc. When Q1 turns off, the current flowing in the T1 primary and in L1 continue to flow in the same direction, due to the stored energy in their cores, charging up C28. When C28 has sufficient voltage, it drives current back through T1 and L1 in the opposite direction. This causes current to flow out of pin 3 (350 V winding), out of pin 5 (4V winding) and out of the high voltage lead (10kV) of the flyback transformer T1.

Each output is half-wave rectified and appropriately filtered. The +30VDC is most filtered, as it is used to drive the cathode at approximately 8 MHz. The -80V is adjusted through a 200k ohm trimmer (R43) and a series 100k ohm resistor (R52) for the intensity adjustment on grid 1 of the CRT. The 350V output is the focus adjustment on grid 4. The 4V winding is fed up to the horizontal deflection section to eliminate crossover distortion in that circuit. 220 Vdc is generated by rectifying the flyback pulses off of Q1. This is resistively divided down to 110V and is used to bias grid 2. The 10kV goes to the anode post accelerator.

Protection against internal discharge of the CRT anode to any of the other tube connections is provided in two ways. First, all resistors which connect directly to the tube are carbon composition construction. These resistors can take large amounts of short-duration energy, and still behave as a current-limiting resistive element. The second protection is provided by gas discharge tubes and neon bulbs. These devices normally exhibit only a few pico-farads of capacitance when the normal operating voltages are applied. Upon a high-voltage discharge, the device(s) conduct, forming a low-impedance path to ground, clamping the discharge voltage to a nondestructive value.

Horizontal Deflection

This section also takes an isolated version of HDRIVE to drive the base of power transistor Q8. Just before Q8 turns on, there is no current in the horizontal yoke, and the beam is at the center of the tube. When Q8 turns on, current is pulled through the yoke and L4, causing the beam to deflect to the right. When Q8 turns off, the current in the coils continues to flow in the same direction, causing C38 to charge up rapidly. When all the coil energy is transferred to C38, the capacitor discharges through the yoke, reversing its current direction and producing a 7 usec retrace of the beam to the far left side of the tube. At the end of retrace, the energy now in the yoke tries to charge C38 with the opposite polarity. When this voltage reaches a few volts, CR8 conducts, providing a new current path for the yoke. The flow of current in this direction causes the beam to move from the left hand side to the center of the screen, at which time Q8 is turned on.

This voltage clamping by CR8 causes a constant rate of change in yoke coil current. CR8 turns on after the yoke has re-charged C38 a few volts, rather than at zero volts, to compensate for resistive elements in the yoke current path. This keeps the rate of current change from being greater at the beginning of the sweep than at the center or right side.

Compensation for the deflection rate at the sides of the CRT is accomplished using C39. During the left-to-center half of the sweep, the charge on C39 increases slightly. At center screen, when Q8 is turned on, C39 is slowly discharged, until the beam reaches the right end of the sweep. This reduces the voltage across the deflection coil at the beginning and end of the sweep, reducing the rate of current change in the yoke coil.

Size of the horizontal scan is controlled by R20. R20 controls the voltage available to the deflection circuit by decreasing the coil current rate of change. Since the period of HDRIVE is constant, the scan is shorter if the deflection rate is decreased.

Horizontal position is adjusted by injecting a constant current through the deflection coil. R27 determines the current and U206 compares the voltage drops across R36 and C24, and drives Q6 and Q7 until the voltage drops are equal. This establishes a constant current through R15 and the yoke.

Vertical Deflection

This circuit generates the vertical sweep and controls its height, linearity, and position. VDRIVE initiates a ramp generator, which in turn controls the current through the deflection coil. When VDRIVE goes high, Q13 is turned on which discharges C55 and C56 through R75. VDRIVE remains high for 500us (until the capacitor charge is down to a few millivolts). When VDRIVE goes low, Q13 is turned off and C55 and C56 charge up at a rate determined by R70 and R73. R70 controls the size of the vertical sweep by determining how much the capacitors charge.

The voltage ramp developed at the junction of R75 and C56 is applied to U608. Part of the U608 output is fed back to C55 and C56 to correct the voltage input of U608 which compensates the ramp generator. R69 controls the amount of this feedback, which affects the shape of the ramp, and ultimately the linearity of the vertical sweep. The adjustable-ramp output of U608 drives the current amplifier (U508, Q12, Q9) which maintains a current through the emitter of Q9 that is proportional to the ramp voltage. U508 compares the ramp voltage to the voltage across R68 and drives Q12 until the U508 inputs are equal.

At the beginning of the sweep, a very small current is flowing through Q9 and a large current is flowing from the +5V supply through L5 and the deflection coil and out the -12V supply. This corresponds with the beam being at the top of the display. As the current in Q9 increases with the ramp waveform, current flowing into the yoke gets shunted through Q9. The yoke current decreases and Q9 current increases until no current is flowing through the yoke and the beam is at center screen. More current continues to flow through Q9 and the deflection coil current begins to flow in the opposite direction. When the beam reaches the bottom of the display, the deflection coil current is about the same as it was when the beam was at the top, except is now flowing in the opposite direction.

At this time Q9 is turned off abruptly, and the currents through L5 and the deflection coil rapidly charge up C26, resulting in a voltage pulse on the collector of Q9. The energy in the deflection coil has gone to zero at the peak voltage, and the beam is back at the center of the tube. Current through L5 and from C26 drive the deflection coil in the opposite direction, returning the beam to the top of the display. This entire retrace takes only 7 usec, and then Q9 begins to conduct again.

Compensation for deflection rate at the top and bottom of the screen is accomplished by C29 in a similar manner as the horizontal deflection circuit. Vertical positioning is similarly accomplished by injecting a constant current through the yoke.

Video Amplifier

The video amplifier takes the TTL level VIDEO signal input and amplifies it to a zero to +30V level in order to drive the CRT cathode.

Q2 and Q3 form a differential amplifier to translate the TTL level signal up to near 30V. Current from the 30V bus always flows through R46 and L2. When VIDEO is low, Q2 is off and Q3 is on. The current from L2 and the bases of Q4 and Q5 are routed through the collector of Q3, causing Q4 to be off and Q5 on. This drives the cathode of the CRT to ground, which allows the emitted electrons to pass on to activate the phosphor screen.

When VIDEO goes high, Q2 is on, pulling its emitter up to near +5 volts. This causes Q3's emitter to rise, and turn Q3 off. The current in L2 continues to flow in the same direction, but is now driving the base of Q4 on and the base of Q5 off very hard. Q2 (on) drives the cathode near +30 volts, causing the emitted electrons to be absorbed by the cathode resulting in an inactive phosphor screen.

TP501 = +5 volt level

TP502, Horizontal Drive (Test or Run)

TP503, Vertical Drive (Test or Run)

TP504, Clamped Input to Flyback Transformer (Test or Run)

TP506, Vertical Deflection Waveform when linearity is properly adjusted

TP106, Vertical Pulses when vertical size is set for full screen height (Test)

TP107, Horizontal Pulses when horizontal size is set for full screen width (Test)

TP202, CRT Grid Drive at normal intensity

A19 Waveforms

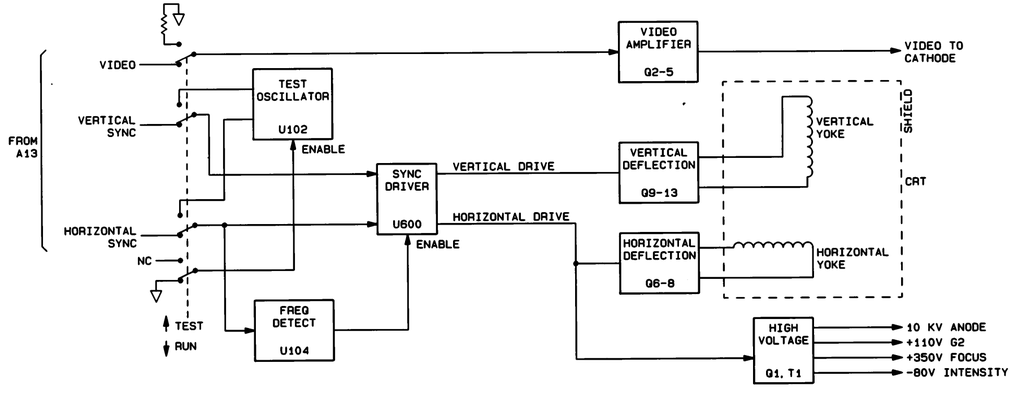

A19

Figure 8-52. A19 CRT Driver Block Diagram

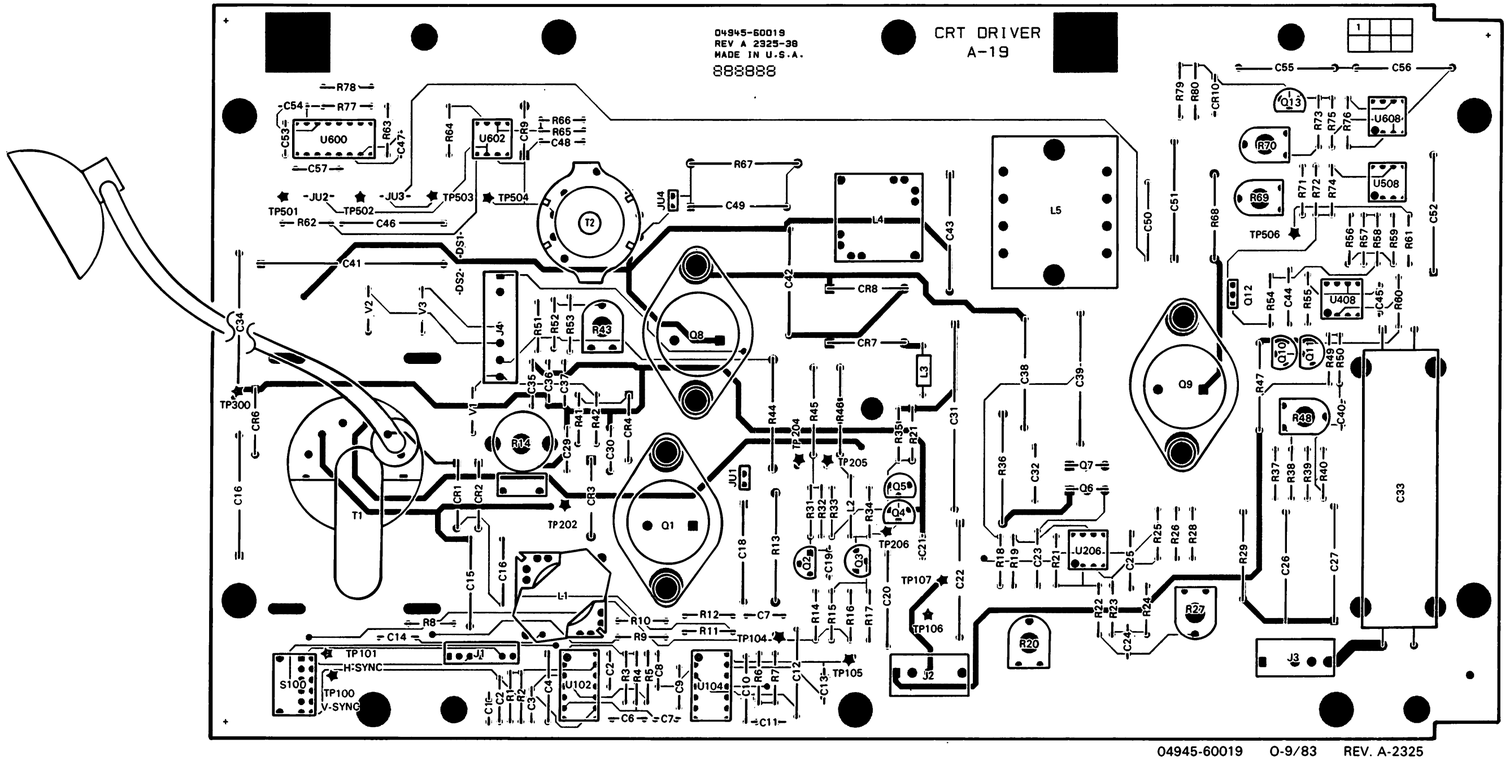

04945-60019 O-9/83 REV. A-2325

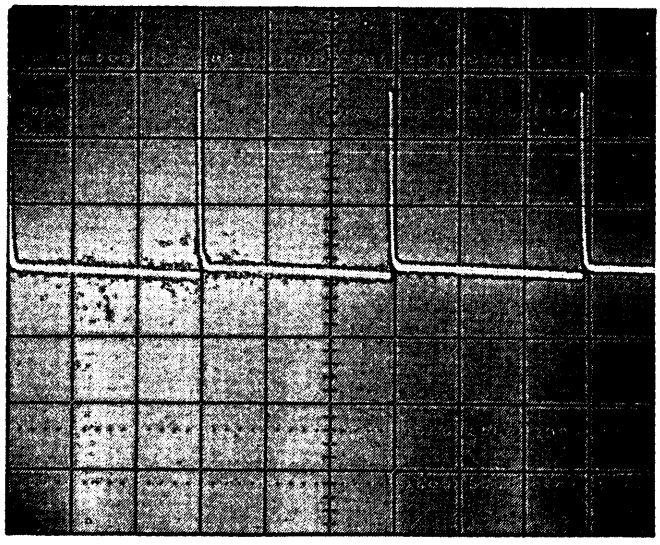

A19 TP106

Vert: 100 V/div
Horiz: 5 msec/div

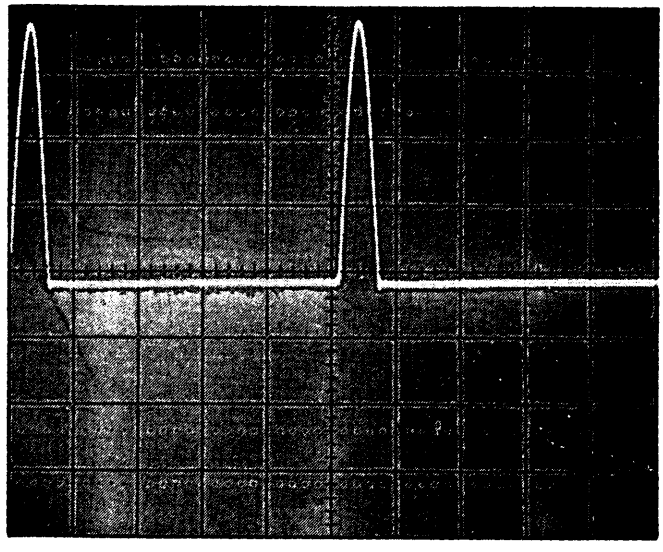

A19 TP107

Vert: 50 V/div
Horiz: 10 μsec/div

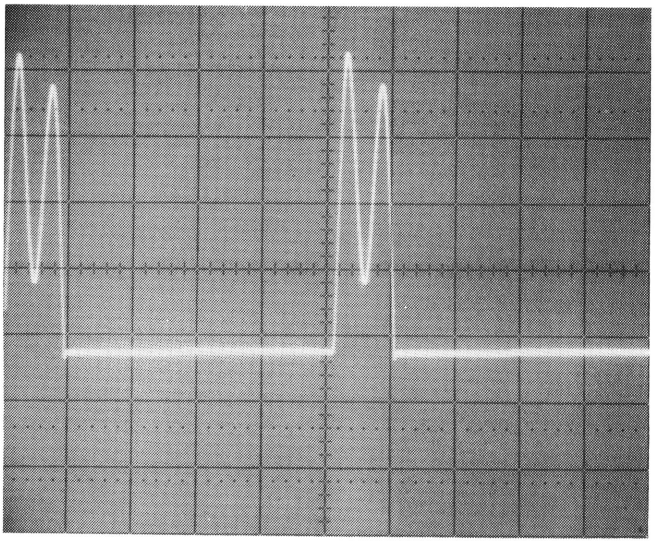

A19 TP202

Vert: 50 V/div
Horiz: 10 μsec/div

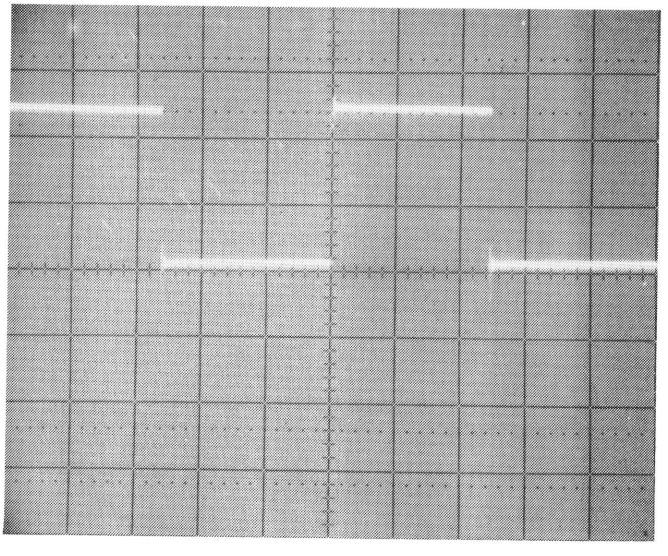

A19 TP502

Vert: 2 V/div
Horiz: 10 μsec/div

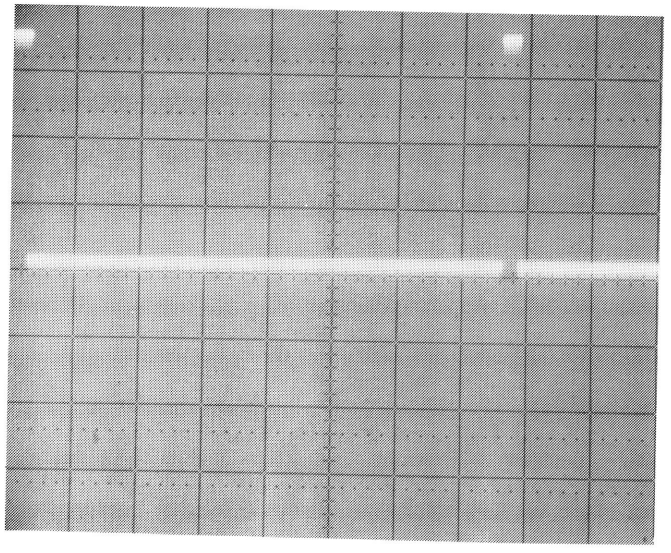

A19 TP503

Vert: 1V/div
Horiz: 2 msec/div

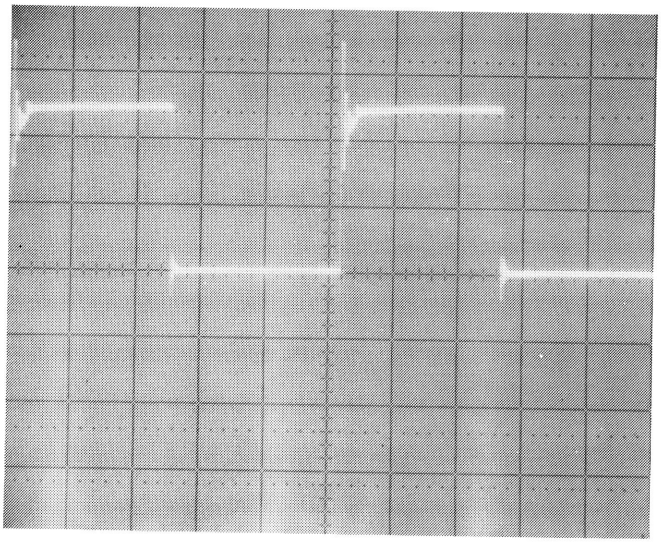

A19 TP504

Vert: 10 V/div
Horiz: 10 μsec/div

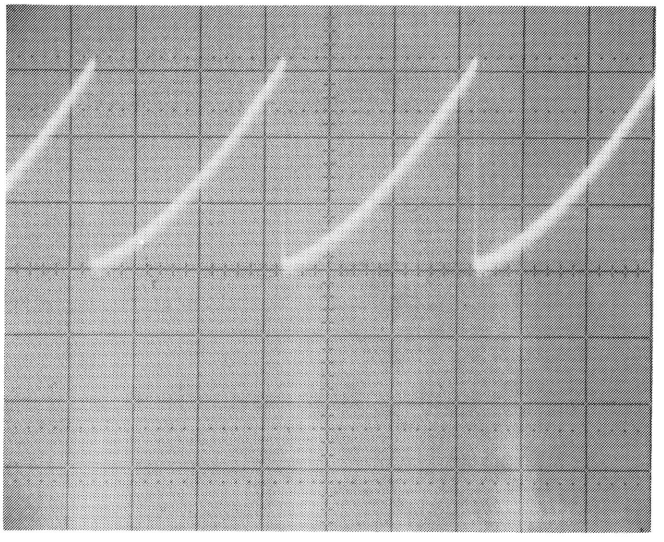

A19 TP506

Vert: 1 V/div
Horiz: 5 msec/div

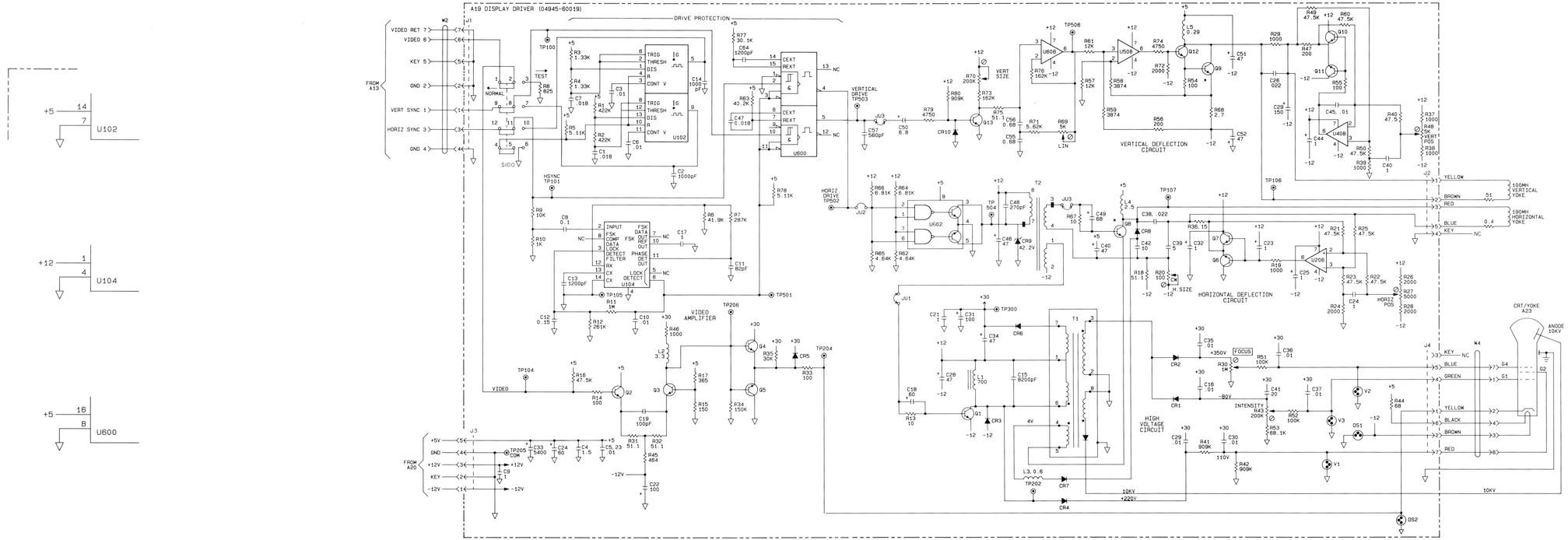

Figure 8-53. A19 CRT Driver Schematic Diagram

8-75. POWER SUPPLY/MOTHERBOARD SECTION

The 4945A has two main power supply boards.

- 65908A-69020 15 Volt Power Supply
  (A28) Provides +5V CLN, +19V, +-15V and 48 Vrms

- 65909A-69020 12 Volt Power Supply
  (A29) Provides +5V NSY, +-12V and +-16V for the fan.

These two boards are on the board exchange program.

The A21 DC Interconnect board distributes dc voltages from the 65908-69020 supply to the rest of the 4945A.

The A20 AC Switching board connects to the 65909-69020 supply and switches and ac line voltage to both supplies.

Refer to the 4945A Block diagram, the power supply block diagram and the schematic diagrams when reading this section.

Isolation Feature

WARNING

LETHAL VOLTAGES ARE PRESENT ON ALL OF THE POWER SUPPLY ASSEMBLIES. FOLLOW ALL HIGH VOLTAGE SAFETY PRECAUTIONS.

Both power supplies can be operated without using the 4945A for a load. This feature can be used in troubleshooting.

The combination of A21 and A28 can be operated, isolated from the 4945A, by performing the following steps.

1. Disconnect all A21 load cables and sense wires that connect to the 4945A. Do not disconnect the input power cable.

2. Connect a jumper wire from the +5 CLN testpoint to the +S testpoint.

3. Connect a jumper wire from the -S testpoint to the Ground testpoint.

The combination of A20 and A29 can be operated, isolated from the 4945A, by the following steps.

1. Disconnect all A20 load cables and sense wires that connect to the 4945A. Do not disconnect the input power cable.

2. Connect a jumper wire from the +5 NSY testpoint to the +S testpoint.

3. Connect a jumper wire from the -S testpoint to the Ground testpoint.

8-76. Power Supply (A28, A29)

The 4945A has two power supplies; the +-15 volt supply is 65908A (A28) and the +-12 volt supply is 65909A (A29). Both supplies provide +5 volts as well, and are similar with only a few component differences. The power supply theory is applicable to both boards.

Following is a summary of the power supply specifications.

65908-69020 - Power Supply Specifications

Output Voltage	Adjustment Range	Rated Current	Overvoltage Trip Point	Peak-to-Peak Ripple
+5 CLN	+- .25 V	4 A	6 to 7 V	100 mV
+15	+- .75 V	.75 A	16 to 17.5	100 mV
-15	+- .75 V	.75 A	-16 to -17.5V	100 mV
+19	--		--	200 mV
48 Vrms	--	.13 A	--	--

65909A-69020 - Power Supply Specifications

Output Voltage	Adjustment Range	Rated Current	Overvoltage Trip Point	Peak-to Peak Ripple
+5 NSY	+- .25 V	5 A	6 to 7 V	100 mV
+12	+- .6 V	.8 A	13 to 14.75 V	100 mV
-12	+- .6 V	.8 A	13 to 14.75 V	100 mV
+16	--	.2 A	24 V clamp	200 mV
-16	--	.2 A	24 V clamp	200 mV

Input and FET Switches

Ac line voltage goes through a line filter before it is applied to the input rectifier (U1) and filtered. The voltage selector switch on the rear panel connects the input rectifier as a voltage doubler for 115 V ac operation, and as a full-wave rectifier circuit for 230 V ac operation, so that for either ac input range, the dc voltage across Q1 and Q2 is nominally 325 volts. Q1 and Q2 are switched on and off alternately by the clock and not-clock signals, producing a square wave input to the series resonant circuit.

Series Resonant Circuit

The series resonant tank circuit consists of L1, T2, C20 and C30. Essentially, this circuit converts the square wave into a sine wave across the primary of T2. If the frequency of the square wave is equal to the resonant frequency of this tank circuit, then the maximum voltage is transferred to the supply rectifiers. As the switching frequency is increased from resonance, the output voltage drops to the desired level. This is how output voltage regulation is achieved.

The supply's clock frequency is current controlled and varies over a range of frequencies above the resonant frequency of the series resonant circuit. The output voltage is controlled by variations in the clock frequency.

If the load current drawn from the supply decreases, the Q of the resonant circuit increases. The voltage control circuit compensates for the change in Q by increasing the clock frequency to maintain a constant output voltage.

The voltage from the series resonant circuit is rectified and filtered before going to voltage regulators and then to the pc boards.

Voltage Control Circuit

The V1 output voltage is sensed and compared to a reference voltage at U4B in the voltage control circuit. The output of U4B drives Q7 which controls the current through L3. L3 is a saturable-core reactor whose inductance in the two ac windings varies inversely with the control current in the dc winding. The inductance of L3 determines the clock frequency.

Startup and Clock Circuit

In this description, all voltages are referenced to the -clock bias supply (Q5 collector). At initial turn on, the clock bias supply provides about 40 V dc across the clock circuit. When the voltage across diac CR81 reaches approximately 22 V dc, CR81 conducts and starts the clock circuit oscillating. Once the clock circuit begins to run, the startup circuit of R14 and CR81 no longer influences the clock. Q3 is a shunt regulator. Q80 operates as a switch controlled by Q81, VR80 and R83. Q80 is turned on only when the voltage across the + and - lines of the clock bias supply is sufficient enable the clock circuit to operate properly. During operation, Q4 and Q5 turn on alternately to provide positive and negative going transitions through the primary of T1. Q5 supplies current through T1 on the negative half of the clock cycle and Q4 supplies current through T1 on the positive half of the clock cycle. For each transition, the particular transistor initially supplies all the current for T1. The current through L3 increases until it supplies all the current and the transistor is turned off. The other transistor then turns on and the cycle continues. Once the clock circuit begins to run, the startup circuit of R14 and CR81 no longer influences the clock.

Power Supply Protection

VR9 and VR10 detect overvoltage conditions. If the output voltage exceeds the diode breakdown voltage, current flows through optical isolator U7. The output of U7 turns on Q10 which causes current to flow through U9. The voltage developed across R46 turns on Q9 which shuts down the clock bias supply. Q9 remains on until the ac input voltage is turned off.

TS1 senses over temperature conditions. The power supply is shut down if the temperature exceeds 80 degrees C. The same shut down path is used as for the overvoltage shutdown.

In the voltage control circuit, U4D and Q8 protect against output voltage overshoot when ac power is turned off and then rapidly turned on again. U4C reduces the control loop gain in high line voltage, low load conditions.

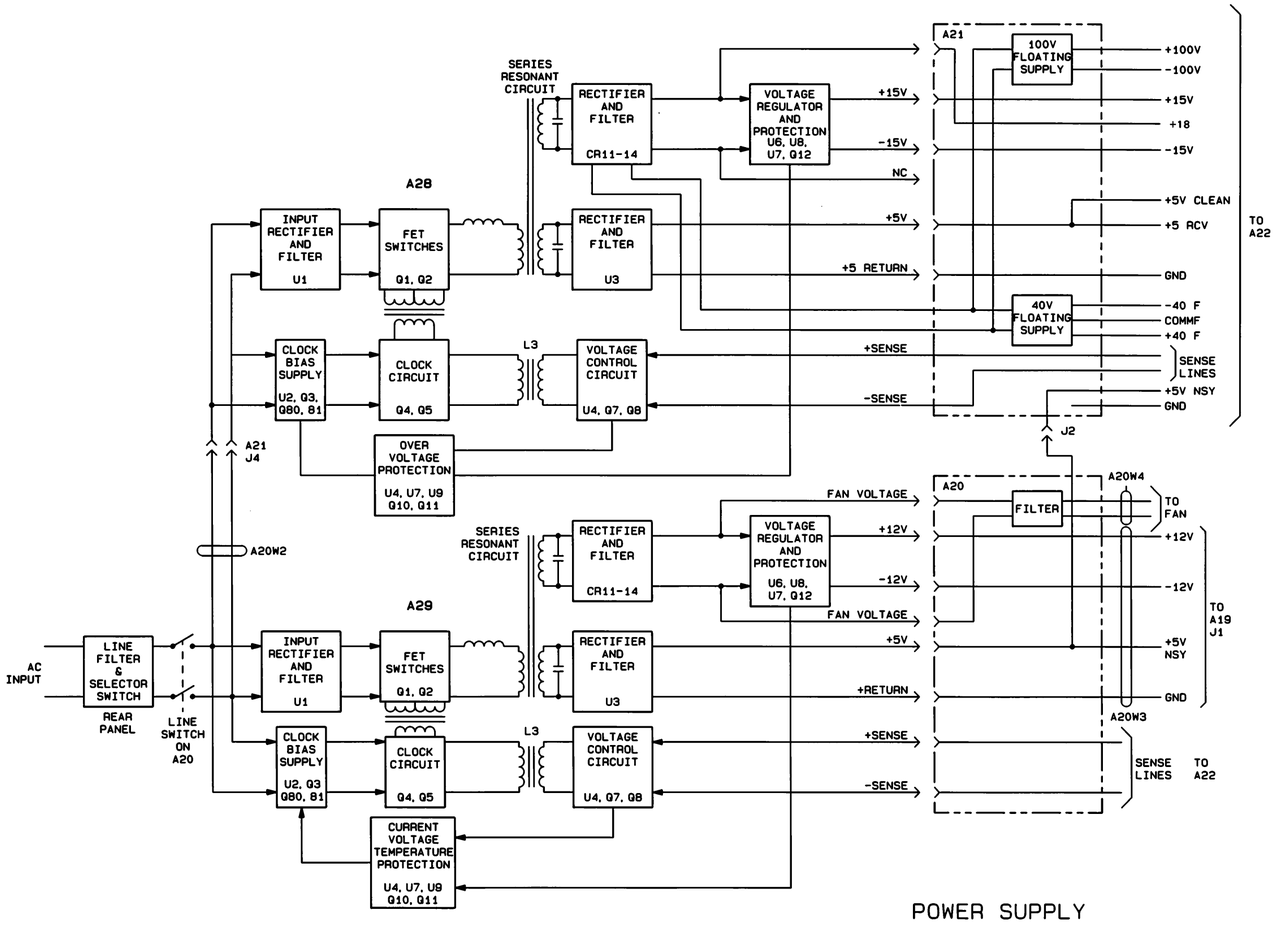

Figure 8-54. Power Supply Block Diagram

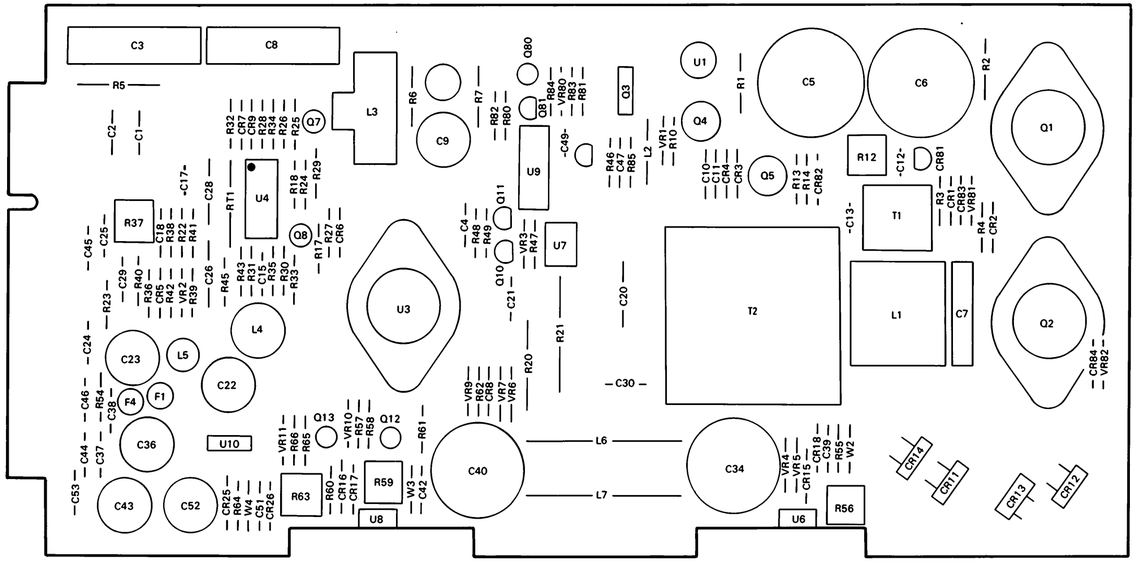

04945-65908 O-9/83

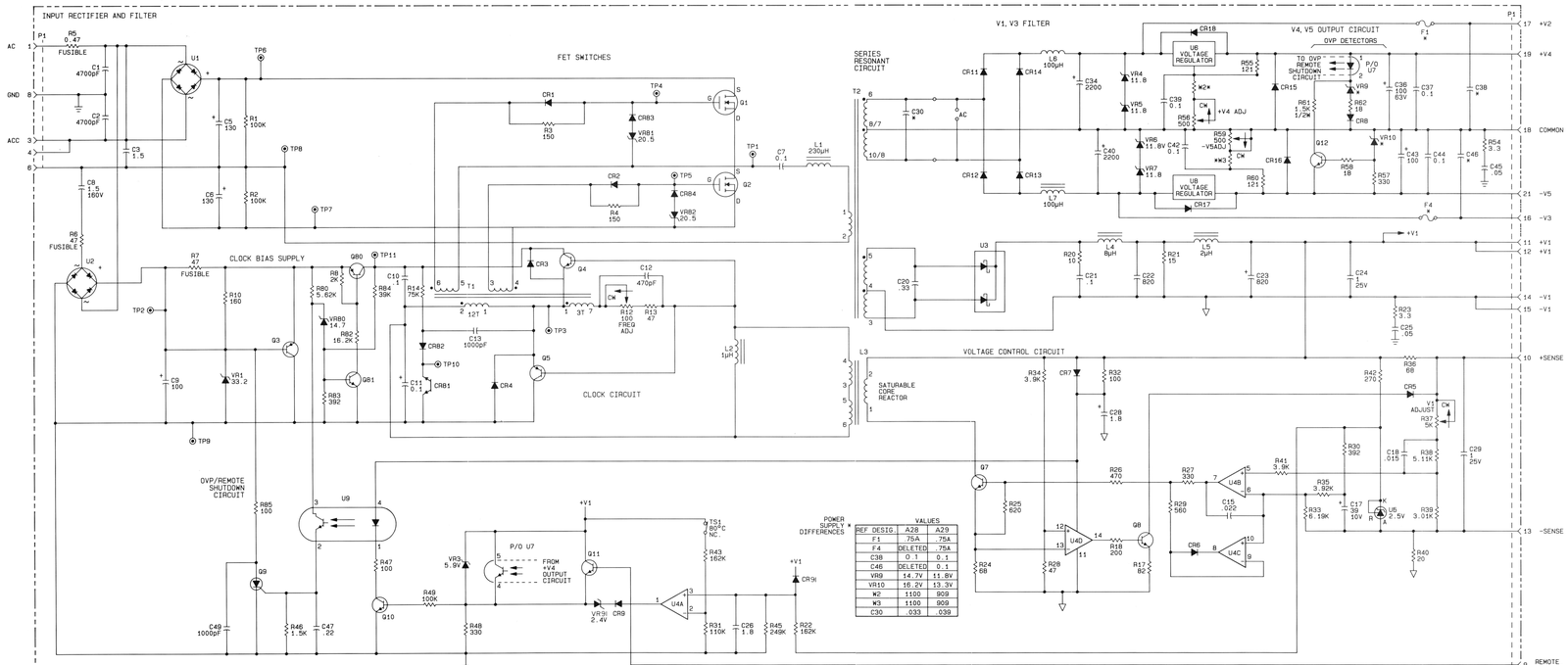

POWER SUPPLY DIFFERENCES	VALUES	
REF DESIG.	A28	A29
F1	75A	75A
F4	DELETED	75A
C38	0.1	0.1
C46	DELETED	0.1
VR9	14.7V	11.8V
VR10	16.2V	13.3V
K2	1100	909
K3	1100	909
C30	.033	.039

Figure 8-55. 65908A and 65909A Power Supply Schematic Diagram

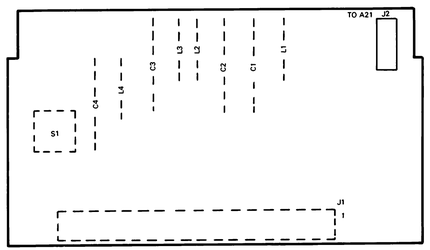

04945-60020 O-1/83

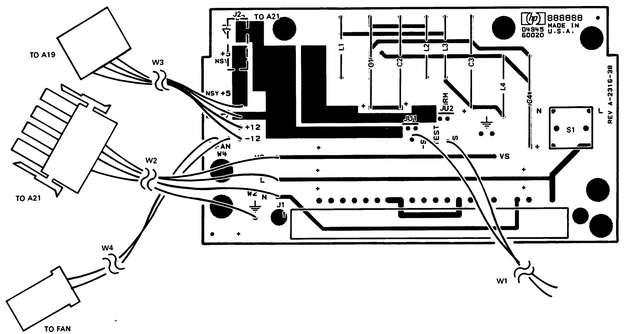

04945-60020 O-9/83 REV. A-2316

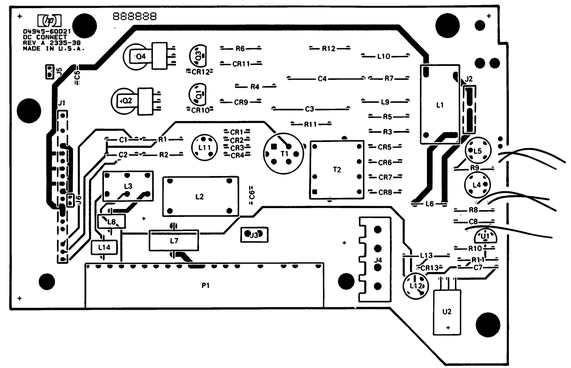

04945-60021 O-9/83 REV. A-2335

8-77. AC Mains Switching (A20)

A20 connects to the 65909A supply. It distributes the dc outputs from that supply, filters the dc voltage to the fan and holds the ac power switch.

The fused ac line is connected to the power switch. The switched ac line is applied to the 65909A supply and to the 65908A supply via A20W2 through the A21 board.

The +5 volt return and other common ground lines are tied together on this board to form a common ground for the entire instrument.

Outputs +5 NSY, +12 Vdc, -12 Vdc and GND are sent to A19 via A20W3. +5 NSY and its return also go to A21 via J2. +5 NSY is the noisy +5 supply since 20 kHz switching noise is induced from the CRT driver board (A19).

The +- 16 Vdc outputs are connected to an LC filter and then to the fan via A20W4. The filter keeps fan switching transients from distorting the display and lowers the supply voltage to the fan. The voltage at the fan is approximately 27.5 volts and the current is 220 mA.

Sense lines from the power supply are connected to the motherboard between A11 and A12. These are feedback lines that ensure that the +5 NSY voltage is always 5.00 volts at these boards.

8-78. DC Connect Board (A21)

All the input and output connections to the 65908A supply are through the A21 board. It distributes all dc power to the motherboard. The +- 100 Vdc supply is on this board as well as the floating +- 40 Vdc supply.

A 48 Vrms, 200 kHz sine wave output from the 65908A supply is connected to A21 via A21J3. This signal is applied to the primaries of T1 and T2.

The secondary of T1 creates a 60 Vrms center-tapped output which is rectified and filtered to produce the +- 40 Vdc floating supplies.

The secondary of T2 creates a 250 Vrms center-tapped output. The center tap is connected to system ground. This voltage is rectified and filtered to produce the +- 100 Vdc supplies. Regulation is accomplished by Q1 through Q4 and their associated circuits.

These dc outputs along with the +- 15 Vdc and + 5 Vdc from the 65908A supply are sent to the motherboard through A21J1. The +5 volts from the 65908A supply is designated as +5 CLN. The +5 NSY voltage comes to A21 from A20 and also goes out A21J1. All non-floating dc return paths are tied together on A21 to form the system ground.

Sense lines from A21 are connected to the motherboard between A5 and A6. These are feedback lines that ensure that the +5 CLN and +5 NSY voltages are always +5.00 volts at the motherboard.

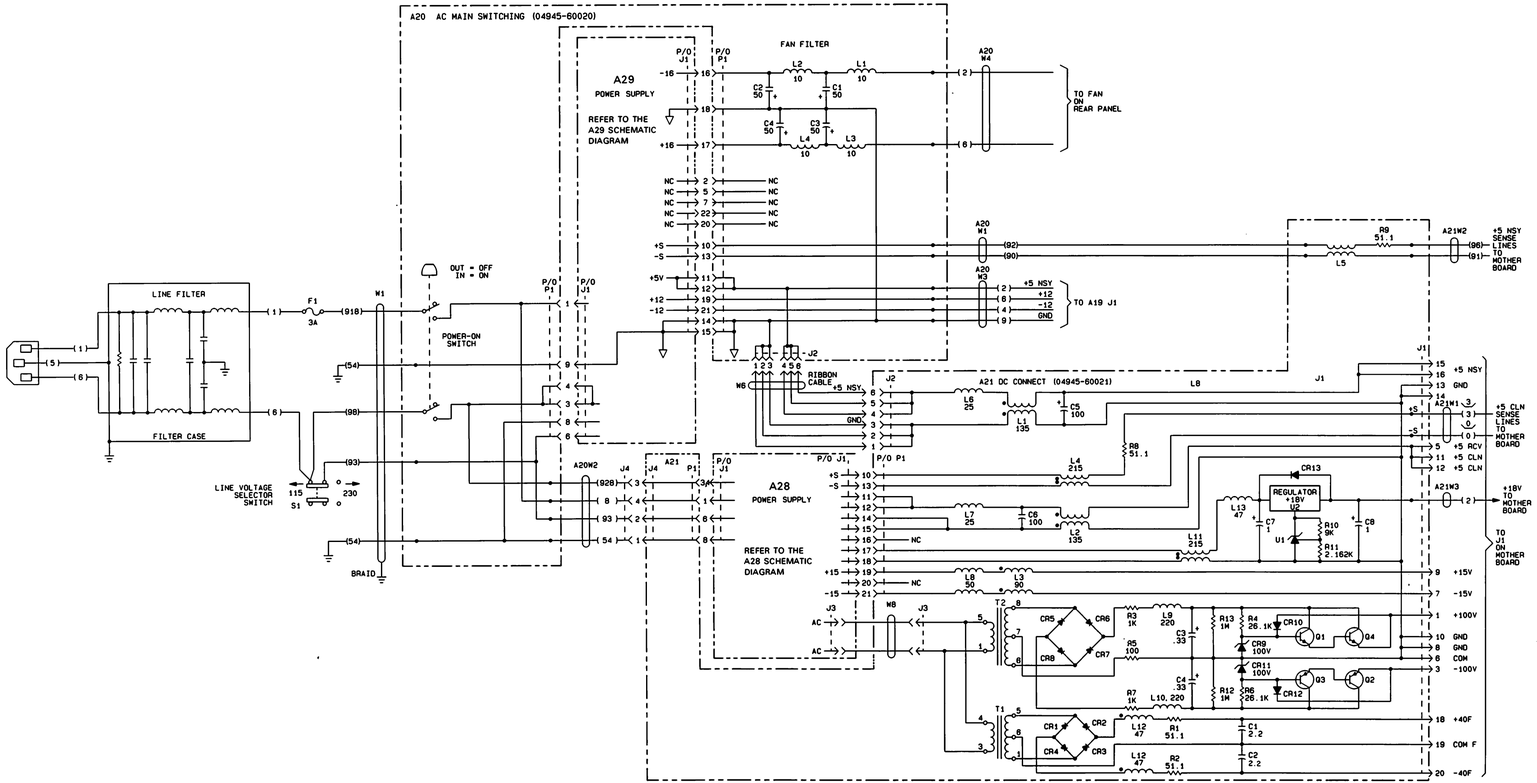

Figure 8-56. Power Supply AC and DC interconnection Schematic Diagram

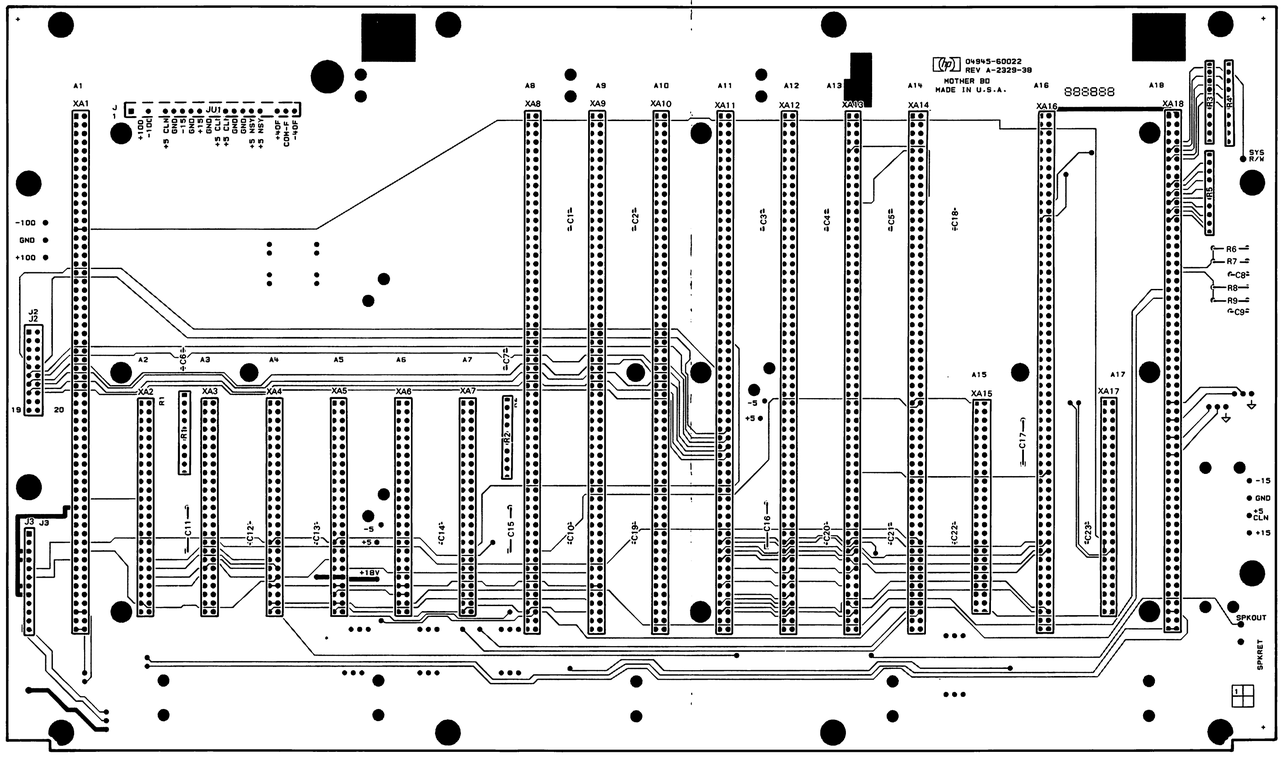

04945-60022 O-9/83 REV. A-2329

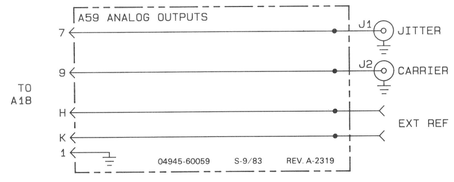

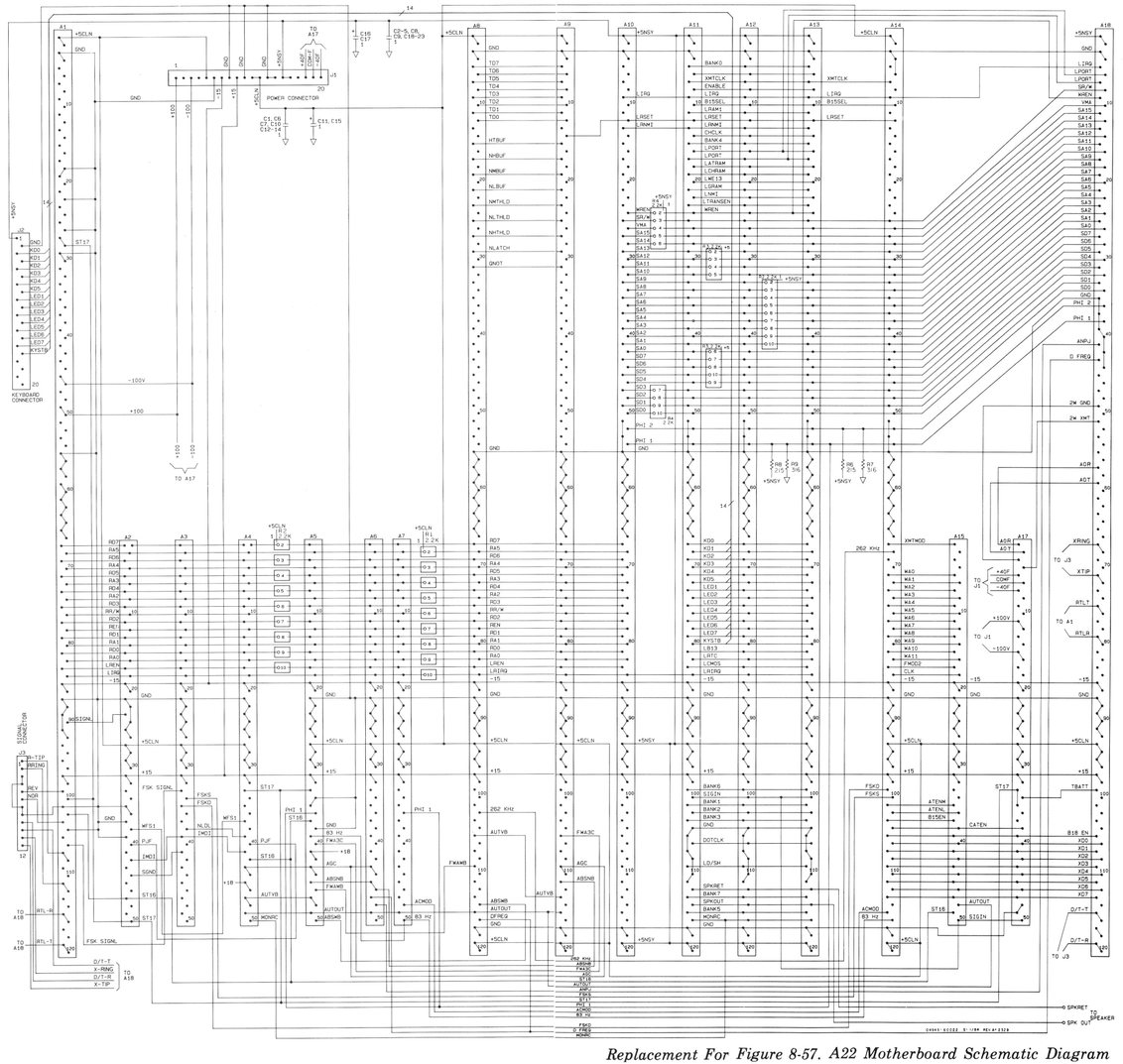

Replacement For Figure 8-57. A22 Motherboard Schematic Diagram

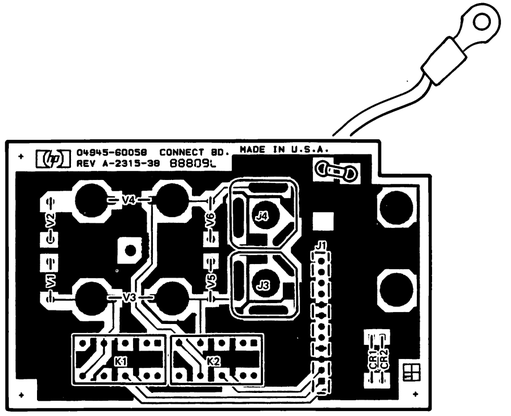

04945-60058 O-9/83 REV. A-2315

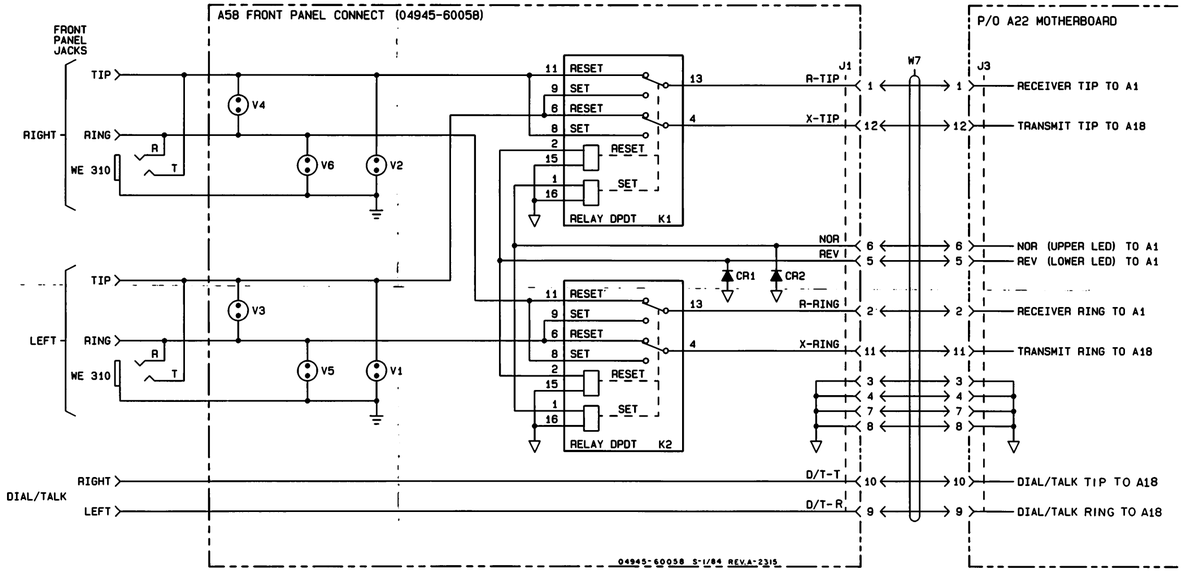

Replacement For Figure 8-58. A58 Front Panel Connect Schematic Diagram

8-79. Power Supply Test Fixtures

There are two test fixtures that can be used to isolate power supply problems. Both of these items are in the 04945-62607 Service Kit.

- Passive Loading Board (04945-60062)
- Power Supply Test Fixture (04945-62608)

Passive Loading Board

The passive loading board can be plugged into any card cage slot to simulate the power supply load. The load presented by this board is the minimum required for the power supplies to operate properly.

Refer to Figure 8-59 for the passive loading board schematic diagram and parts list.

Power Supply Test Fixture

The power supply test fixture lets you test the power supply boards isolated from the rest of the instrument.

The test fixture provides the proper ac input voltages and the proper loads for the power supply voltages.

Refer to Figure 8-60 for the power supply test fixture schematic diagram and parts list.

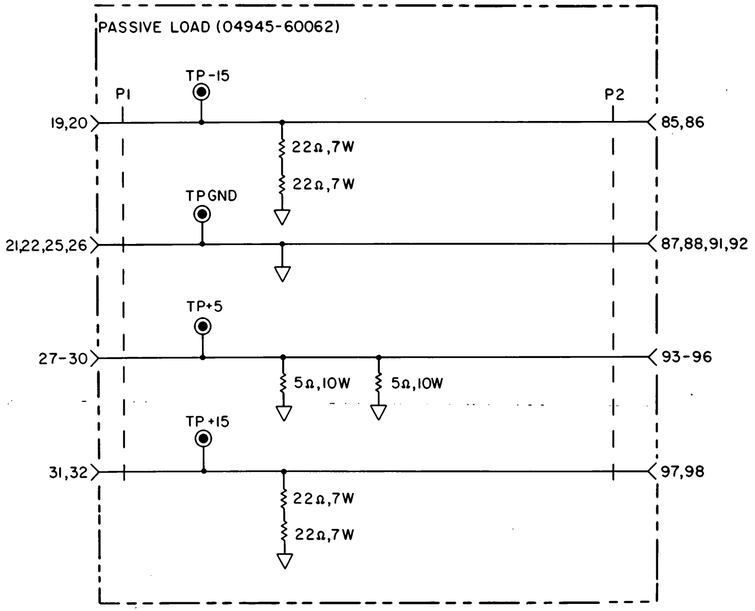

Figure 8-59. Passive Loading Board Schematic Diagram

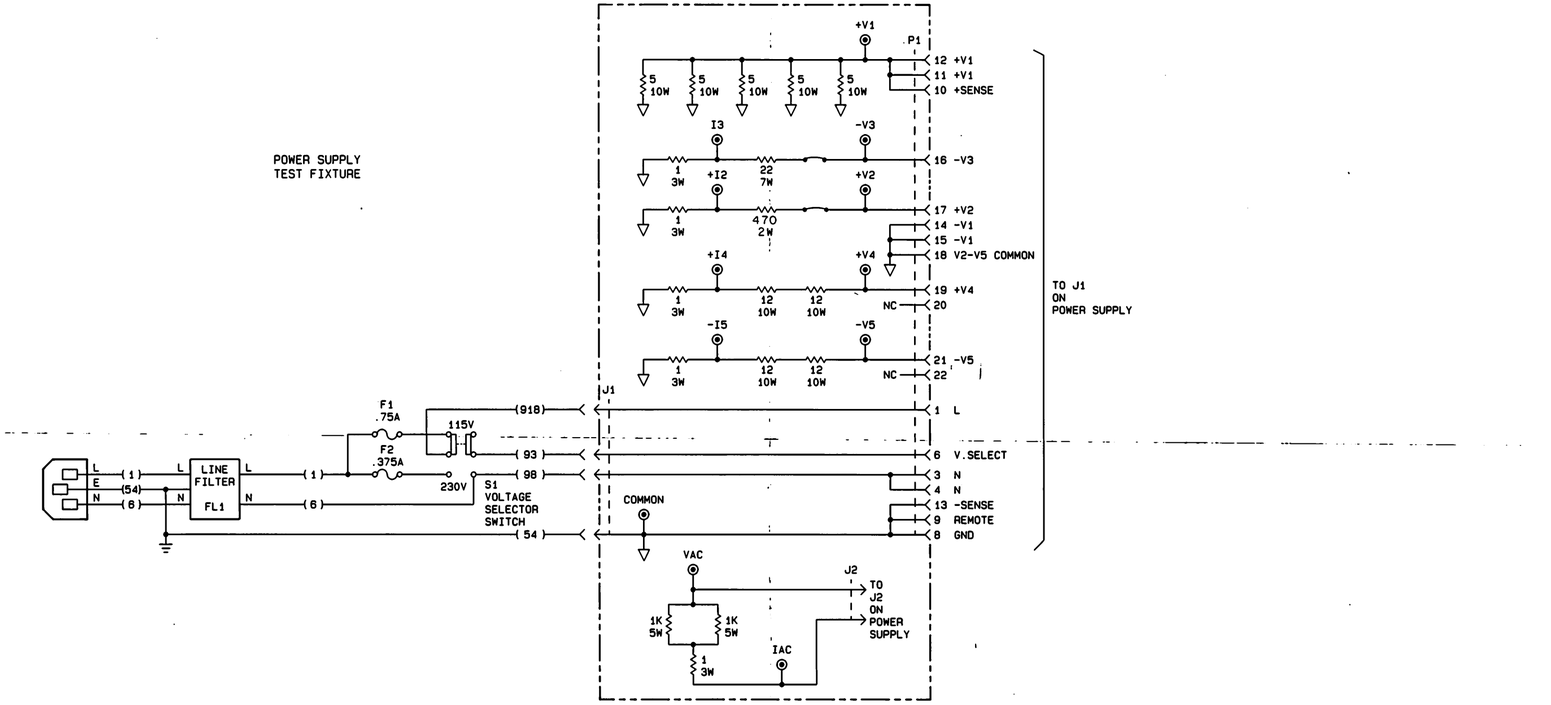

Figure 8-60. Power Supply Test Fixture Schematic Diagram

8-80. I/O SECTION

This section contains service information for the three 4945A interfaces. This information includes theory of operation, schematic diagrams and troubleshooting.

Interface replaceable parts lists are included in Section 6.

Refer to the 4945A Operating Manual for interface operating information.

Any two of the interfaces can be connected to the 4945A rear panel at one time. The interfaces are:

- 18162A HP-IB Interface
- 18163A RS-232 Interface
- 18165A HP-IL Interface

The interfaces are controlled by the System Processor and allow the 4945A to communicate with external devices.

Refer to the 4945A Block diagram, the individual interface block diagrams and the schematic diagrams when reading this section.

The two interface connectors are physically on the A18 board and are separate from the board's transmitter output function.

The connectors on A18 connect directly to the system processor address and data busses.

Figure 8-61 shows the signals on the I/O interface connectors.

Typically only one interface is connected and the other slot is occupied by the analog output board (A59). The A59 board has a panel with two BNC connectors for phase jitter and carrier outputs, and two post connectors for an external reference input. The A59 board can only be installed in port 2.

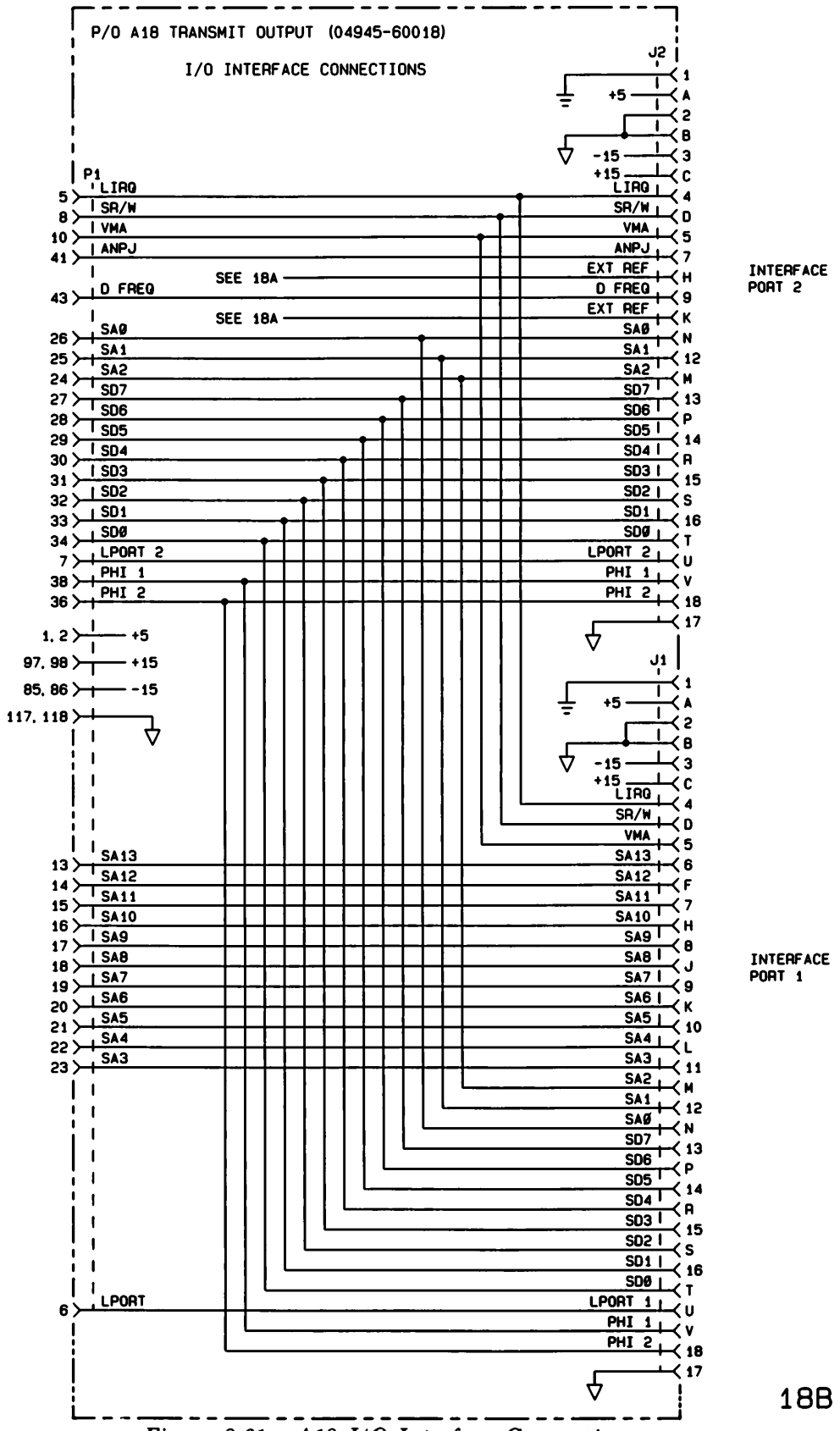

Figure 8-61. A18 I/O Interface Connections

8-81. HP-IB Interface (18162A)

Figure 8-62 is the 18162A Interface schematic diagram.

To the 4945, the interface looks like three addresses: the input latch (U400), the output latch (U300), and the status latch (U200). The status latch controls data transfers into and out of the 4945A through the input and output latches. Bit two (pin 5) of the status latch is grounded and must be read low before any other bits may be considered valid.

Data output is controlled by bit zero (pin 2) of the status latch. When the 4945A wishes to write data out, it tests bit zero. If the bit is high, then the 4945A writes the byte of data to the output latch. This drives bit zero low and generates an interrupt for the I/O processor. The I/O processor (U301) reads the output latch through port 2. When the I/O processor is ready to receive another byte, it sets bit zero of the status latch, using the port three, bit seven, output line.

Data input is controlled by bit one of the status latch and the system interrupt line (LIRQ). When the interface has data to write to the 4945, it writes a byte to the input latch, providing that the last byte written there has been read. This sets bit one of the status latch and drives the system interrupt line low. When it receives an interrupt, the 4945A polls it's interrupt sources. When bit one of the status latch is high, and bit two is low, it reads the input latch. This resets bit one of the status latch and generates an interrupt on the I/O processor, telling it that the byte has been read, and prompting the input of the next byte.

Port 1 of U301 is configured as an eight bit multiplexed address/data bus. Port 0 is an input port for the upper address bus. To ensure that the ROM (U302) is selected both with the upper address bus in a high impedance state and when it is active, output pins 4 and 7 of U604 are wire ORed together, effectively locating the ROM at addresses 0000 - 3FFF and C000 - FFFF. Address lines A8 through A13 are pulled low to ensure power up at 000C.

HP-IB Firmware Operation

The HP-IB firmware has four major sections: a power on routine, queue routines, command decoder and a data encoder.

Power On Routine

The power on routine does the following in the sequence listed below.

- Initialize the I/O processor (U301).
- The interface RAM is tested and the ROM checksum is checked.
- Initialize the flags, pointers and variables.
- Initialize the input and output queues.
- The interface identifies itself to the 4945A by sending the hex code 99 to the 4945A.
- The interface waits for the 4945A to write it's set up information and port number.
- The HP-IB interface chip is initialized (U101).
- The interrupts are enabled and the processor enters a wait loop for interrupts.

Interrupt request zero comes from the HP-IB interface chip whenever there is action that must be taken on the bus. There are two interrupt registers in U101 that identify the interrupt. Every interrupt has it's own service routine.

Besides handling addressing, parallel polls, serial polls, device clear instructions, and interface clears, this routine handles data input and output on the bus, does the command decoding, and keeps track of the block transfer modes.

Interrupt one is generated when the 4945A reads a byte from the input latch. It is a prompt for the next byte to be written.

Interrupt three comes from the output latch when the 4945A writes a byte of data. This triggers a routine to format the output data depending on the mode of operation, and put it into the output queue. Commands may also be written by the 4945A. These are bytes with bits six and seven set. They are decoded and the appropriate action is taken.

Queue Routines

There are two circular queues in the internal registers of the processor. They are managed by the interrupt routines through four registers, a flag register, and two data holdoffs. The four registers are;

- Head, the head of the input queue
- Tail, the tail of the input queue
- Front, the head of the output queue
- Back, the tail of the output queue.

These registers are used as pointers to the queues.

The flag register contains eight flags.

The lower four, InQmt, InQrdy, InQfull, and Heldoff control the input queue. InQmt is true when the input queue is empty. InQrdy is true when the input queue is empty and the 4945A has read the last byte of data that was written to the input latch. InQfull is true when the queue is full. Heldoff is true when the data handshake on the HP-IB bus has been heldoff, stopping the transfer date.

The other four, Empty, Ready, Full, and Type, control the output queue. Empty is true when the output queue is empty. Ready is true when the output queue is empty and the last byte written to the HP-IB bus has been accepted. Full is true when the output queue is full and the status bit handshake with the 4945A has been held off. Type is set whenever a special character from the 4945A is received indicating that the next byte is a data type. The encoding routine uses this information when formatting data for the output queue.

Mnemonic Decoder

The command decoder decodes both the 4944A commands and the 4945A commands. The HP-IB interrupt service routine buffers three command characters. The decoder tests the first character to make sure that it is an ASCII, upper case, alpha code. If it is, the decoder uses the value to compute a pointer which points to a table of addresses. The appropriate address is loaded into the pointer. The first character of each command has its own routine. Unused character addresses point to an error routine.

The 4944A commands have only one upper case alpha followed by a numeric character. When a 4944A command is sent, the routine checks to see if the second character is within the defined set. If not, an error routine is called. The 4945A mnemonics have an upper case alpha second character; these are tested for and the appropriate routine is called. Then the numeric code is checked to see if it is in the correct range. Once a command is decoded, the pointer points to the command dependent address in ROM and the keycode sequence is read into the input queue. The delimiters that flag the end of a keycode string are > and <. The > symbol indicates that there is no data

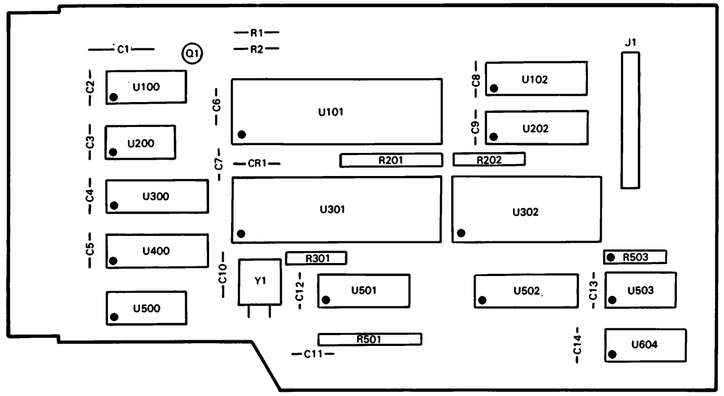

04945-HP-IB-18162 O-9/83 REV. A-2334

to be entered. The < symbol says to enter data entry mode and accept -,., and numeric data until a non-numeric code is received. The keycode E is sent to the 4945A to end the data entry sequence.

Data Encoder

The data encoder works in either the normal mode or the 4944A mode. When the interface is in normal mode, each data type received is used to compute a pointer to a header string. The five character header and a space are put into the output queue. Then the data that the 4945A writes is put behind the header until a carriage return is seen. The header and data can now be sent to the controller.

When the interface is in the 4944A mode, a separate format routine is used for each measurement, except for level frequency and phase jitter, which share an encoder.

When an incorrect command is found by the decoder, a service request is generated.

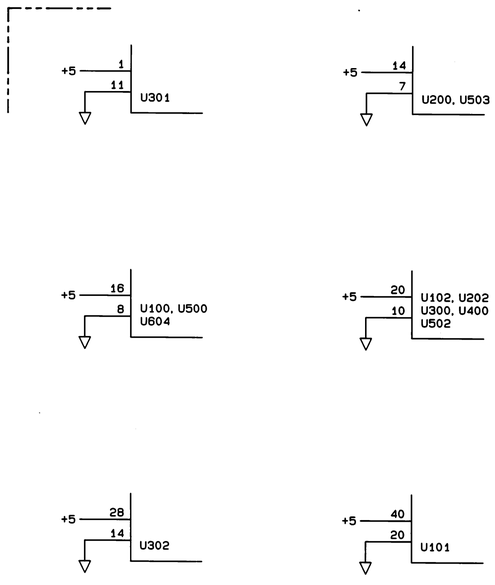

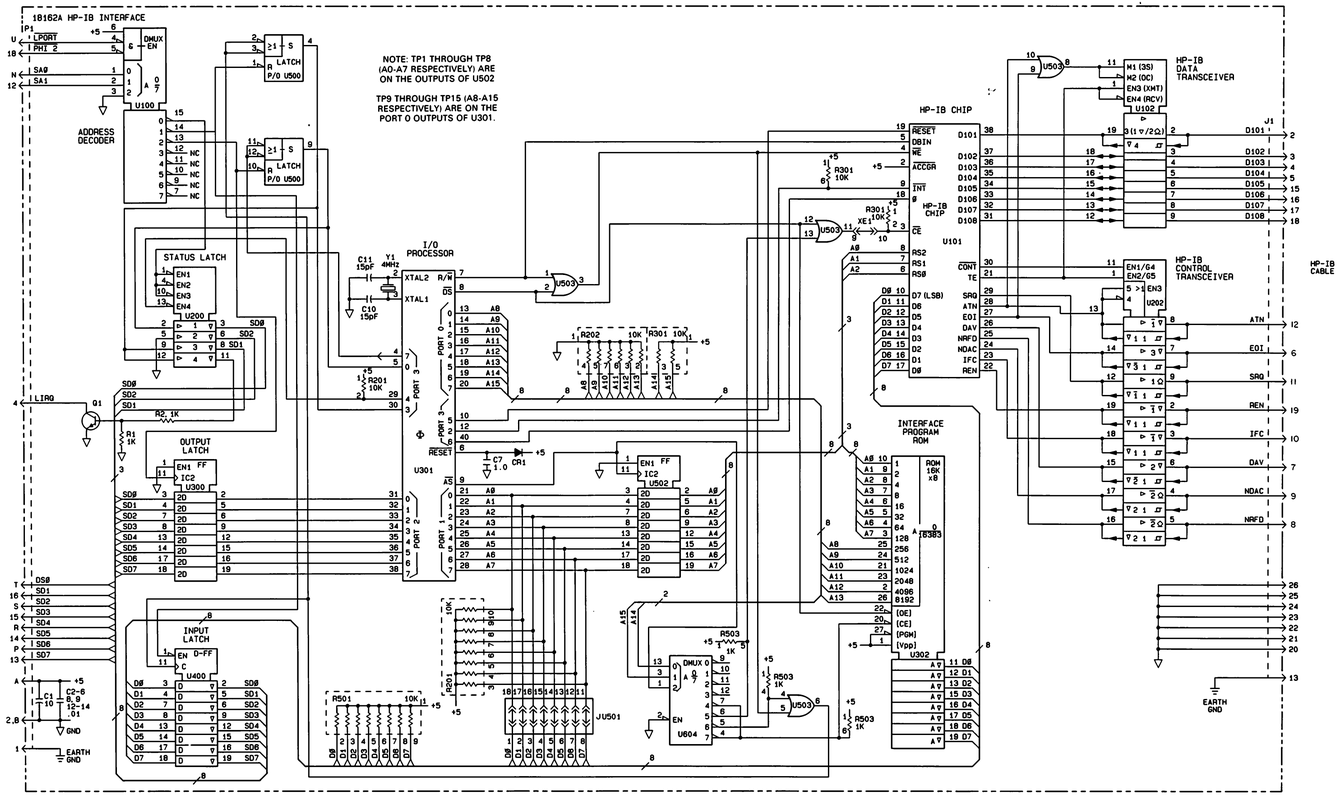

Figure 8-62. 18162A HP-IB Interface Schematic Diagram

8-82. RS-232 Interface (18163A)

Figure 8-63 is the 18163A Interface schematic diagram.

To the 4945, the interface looks like three addresses: the input latch (U500), the output latch (U400), and the status latch (U200). The status latch controls data transfers into and out of the 4945A through the input and output latches. Bit two (pin 5) of the status latch is grounded and must be read low before any other bits may be considered valid.

Data output is controlled by bit zero (pin 2) of the status latch. When the 4945A wishes to write data out, it tests bit zero. If the bit is high, then the 4945A writes the byte of data to the output latch. This drives bit zero low and generates an interrupt for the I/O processor. The I/O processor (U401) reads the output latch through port 2. When the I/O processor is ready to receive another byte, it sets bit zero of the status latch, using the port three, bit seven, output line.

Data input is controlled by bit one of the status latch and the system interrupt line (LIRQ). When the interface has data to write to the 4945, it writes a byte to the input latch, providing that the last byte written there has been read. This sets bit one of the status latch and drives the system interrupt line low. When it receives an interrupt, the 4945A polls it's interrupt sources. When bit one of the status latch is high, and bit two is low, it reads the input latch. This resets bit one of the status latch and generates an interrupt on the I/O processor, telling it that the byte has been read, and prompting the input of the next byte.

Port 1 of U401 is configured as an eight bit multiplexed address/data bus. Port 0 is an input port for the upper address bus. To ensure that the ROM (U403) is selected both with the upper address bus in a high impedance state and when it is active, output pins 4 and 9 of U502 are wire ORed together, effectively locating the ROM at addresses 0000 - 3FFF and C000 - FFFF. Address lines A8 through A12 are pulled low to ensure power up at 000C.

RS-232 Firmware Operation

The RS-232 firmware has four major sections: a power on routine, queue routines, command decoder and a data encoder.

Power On Routine

The power on routine does the following in the sequence listed below.

- Initialize the I/O processor (U401).
- The interface RAM is tested and the ROM checksum is checked.
- Initialize the flags, pointers and variables.
- Initialize the input and output queues.
- The interface identifies itself to the 4945A by sending a hex code to the 4945A.
- The interface waits for the 4945A to write it's set up information and the port number.
- The SIO interface chip is initialized (U102).
- The interrupts are enabled and the processor enters a wait loop for interrupts.

Interrupt request zero comes from the SIO interface chip whenever there is action that must be taken on the serial link. Every interrupt has it's own service routine.

Besides handling addressing instructions and interface clears, this routine handles data input and output on the serial link, and does the command decoding. Interrupt one is generated when the 4945A reads a byte from the input latch. It is a prompt for the next byte to be written.

Interrupt three comes from the output latch when the 4945A writes a byte of data. This triggers a routine to format the output data depending on the mode of operation, and put it into the output queue. Commands may also be written by the 4945A. These are bytes with bits six and seven set. They are decoded and the appropriate action is taken.

Queue Routines

There are two circular queues in the internal registers of the processor. They are managed by the interrupt routines through four registers, a flag register, and two data holdoffs. The four registers are;

- Head, the head of the input queue
- Tail, the tail of the input queue
- Front, the head of the output queue
- Back, the tail of the output queue.

These registers are used as pointers to the queues.

The flag register contains eight flags.

InQmt, InQrdy and InQfull control the input queue. InQmt is true when the input queue is empty. InQrdy is true when the input queue is empty and the 4945A has read the last byte of data that was written to the input latch. InQfull is true when the queue is full.

The other four, Empty, Ready, Full, and Type, control the output queue. Empty is true when the output queue is empty. Ready is true when the output queue is empty and the last byte written to the transmitter shift register has been sent. Full is true when the output queue is full and the status bit handshake with the 4945A has been held off. Type is set whenever a special character from the 4945A is received indicating that the next byte is a data type. The encoding routine uses this information when formatting data for the output queue.

Mnemonic Decoder

The command decoder decodes the 4945A commands. The decoder tests the first character to make sure that it is ASCII, upper case, alpha code. If it is, the decoder uses the value to compute a pointer which points to a table of addresses. The appropriate address is loaded into the pointer. The first character of each command has its own routine. Unused character addresses point to an error routine.

The 4945A mnemonics have an upper case alpha second character; these are tested for and the appropriate routine is called. Then the numeric code is checked to see if it is in the correct range. Once a command is decoded, the pointer points to the command dependent address in ROM and the keycode sequence is read into the input queue. The delimiters that flag the end of a keycode string are > and <. The > symbol indicates that there is no data to be entered. The < symbol says to enter data entry mode and accept -,., and numeric data until a non-numeric code is received. The keycode E is sent to the 4945A to end the data entry sequence.

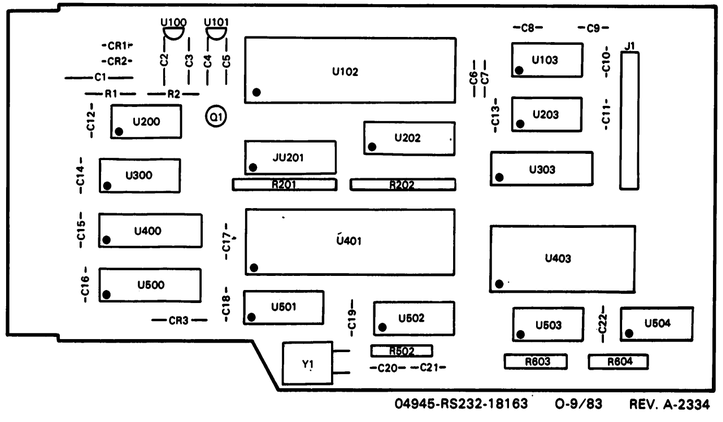

04945-RS232-18163 O-9/83 REV. A-2334

Data Encoder

Each data type received is used to compute a pointer to a header string. The five character header and a space are put into the output queue. Then the data that the 4945A writes is put behind the header until a carriage return is seen. The header and data can now be sent to the serial link.

When an incorrect command is found by the decoder, the status register is updated and an error message is displayed.

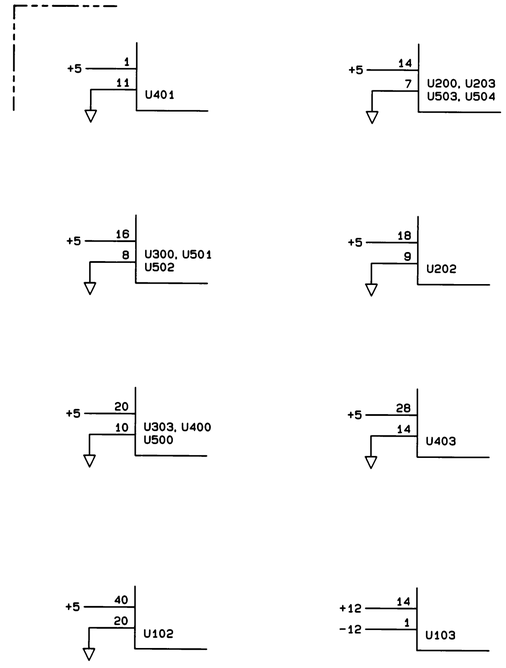

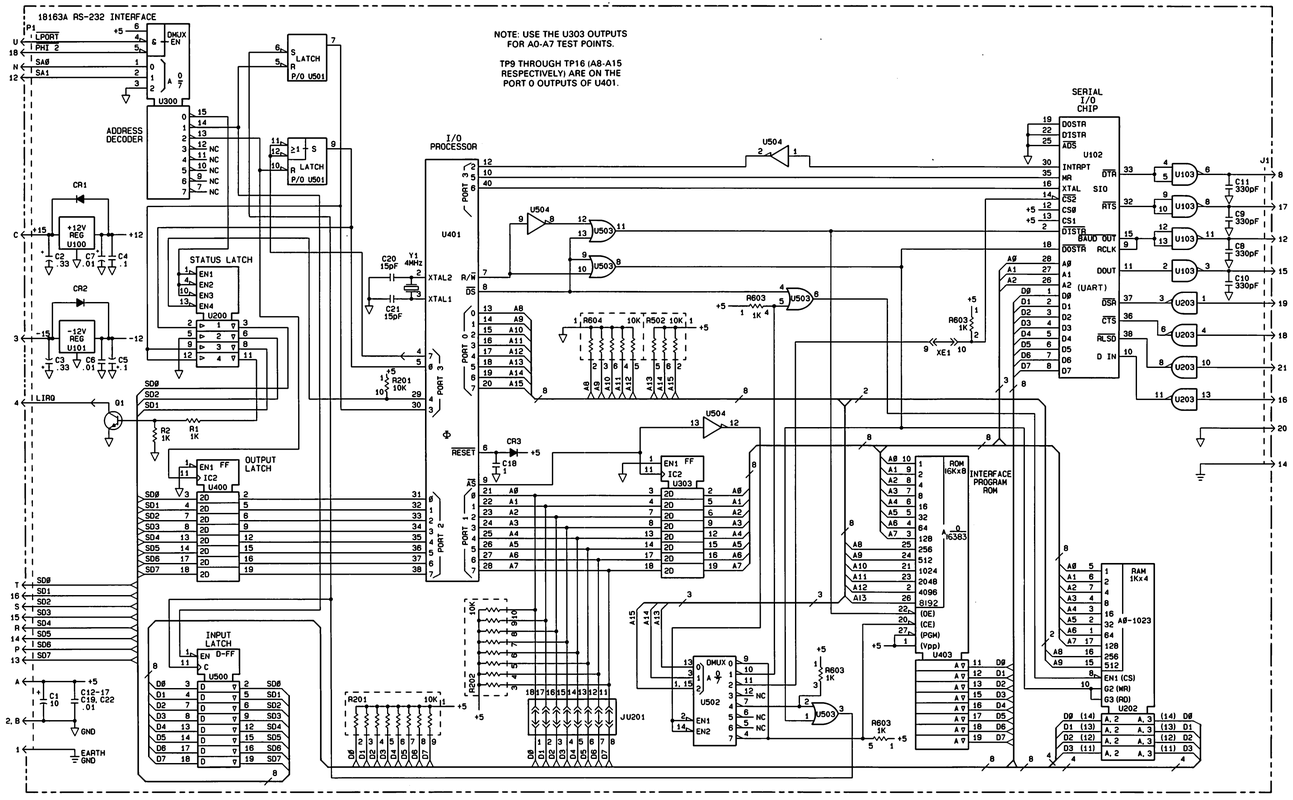

Figure 8-63. 18163A RS-232 Interface Schematic Diagram

8-83. HP-IL INTERFACE (18165A)

Figure 8-62 is the 18165A Interface schematic diagram.

To the 4945, the interface looks like three addresses: the input latch (U400), the output latch (U500), and the status latch (U300). The status latch controls data transfers into and out of the 4945A through the input and output latches. Bit two (pin 5) of the status latch is grounded on the module and must be read low before any other bits may be considered valid.

Data output is controlled by bit zero (pin 3) of the status latch. When the 4945A wishes to write data out, it tests bit zero. If the bit is high, then the 4945A writes the byte of data to the output latch. This drives bit zero low and generates an interrupt for the I/O processor. The I/O processor (U501) reads the output latch through port 2. When the I/O processor is ready to receive another byte, it sets bit zero of the status latch, using the port three, bit seven, output line. Data input is controlled by bit one of the status latch and the system interrupt line (LIRQ). When the interface has data to write to the 4945, it writes a byte to the input latch, providing that the last byte written there has been read. This sets bit one of the status latch and drives the system interrupt line low. When it receives an interrupt, the 4945A polls it's interrupt sources. When bit one of the status latch is high, and bit two is low, it reads the input latch. This resets bit one of the status latch and generates an interrupt on the I/O processor, telling it that the byte has been read, and prompting the input of the next byte.

Port 1 of U501 is configured as an eight bit multiplexed address/data bus. Port 0 is an input port for the upper address bus. To ensure that the ROM (U301) is selected both with the upper address bus in a high impedance state and when it is active, output pins 4 and 7 of U302 are wire ORed together, effectively locating the ROM at addresses 0000 - 3FFF and C000 - FFFF. Address lines A8 through A13 are pulled low to ensure power up at 000C.

HP-IL Firmware Operation

The HP-IL firmware has four major sections: a power-on routine, queue routines, command decoder and a data encoder.

Power On Routine

The power on routine does the following in the sequence listed below.

- Initialize the I/O processor (U501).
- The interface RAM is tested and the ROM checksum is checked.
- Initialize the flags, pointers and variables.
- Initialize the input and output queues.
- The interface identifies itself to the 4945A by sending the hex code 9A to the 4945A.
- The interface waits for the 4945A to write it's set up information and the port number.
- The HP-IL interface chip is initialized (U101).
- The interrupts are enabled and the processor enters a wait loop for interrupts.

Interrupt request zero comes from the HP-IL chip whenever there is action that must be taken on the loop.

Interrupt one is generated when the 4945A reads a byte from the input latch. It is a prompt for the next byte to be written.

Interrupt three comes from the output latch when the 4945A writes a byte of data. This triggers a routine to format the output data depending on the mode of operation, and put it into the output queue. Commands may also be written by the 4945A. These are bytes with bits six and seven set. They are decoded and the appropriate action is taken.

Queue Routines

There are two circular queues in the internal registers of the processor. They are managed by the interrupt routines through four registers, a flag register, and two data holdoffs. The four registers are;

- Head, the head of the input queue
- Tail, the tail of the input queue
- Front, the head of the output queue
- Back, the tail of the output queue.

These registers are used as pointers to the queues.

The flag register contains eight flags.

The lower four, InQmt, InQrdy, InQfull, and Heldoff control the input queue. InQmt is true when the input queue is empty. InQrdy is true when the input queue is empty and the 4945A has read the last byte of data that was written to the input latch. InQfull is true when the queue is full. Heldoff is true when the data handshake on the loop has been heldoff, stopping the transfer of data.

The other four, Empty, Ready, Full, and Type, control the output queue. Empty is true when the output queue is empty. Ready is true when the output queue is empty and the last byte written to the HPIB bus has been accepted. Full is true when the output queue is full and the status bit handshake with the 4945A has been held off. Type is set whenever a special character from the 4945A is received indicating that the next byte is a data type. The encoding routine uses this information when formatting data for the output queue.

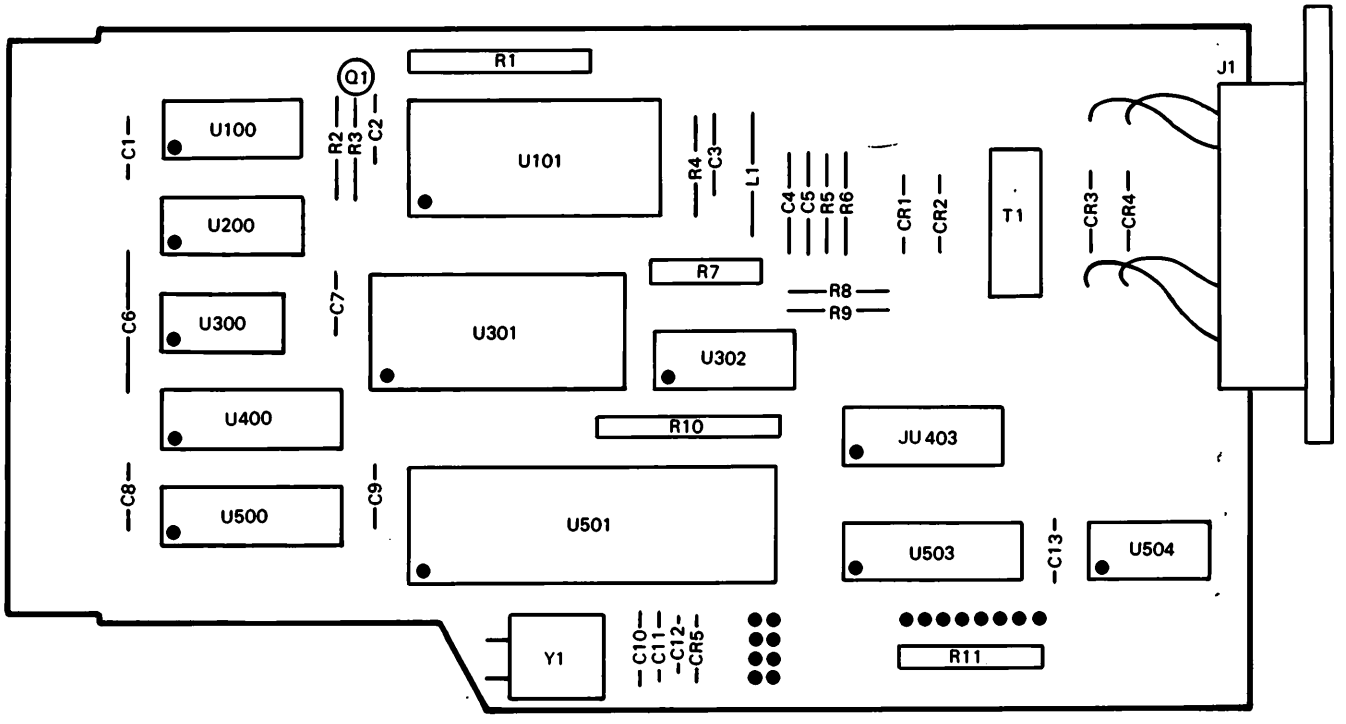

04945-HP-IL-18165 O-9/83 REV. A-2326

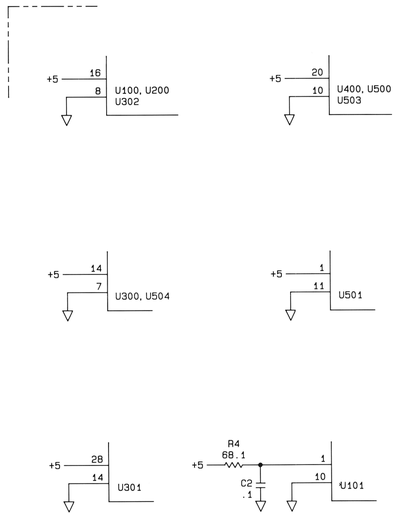
+5
16
8
U100, U200
U302
+5
20
10
U400, U500
U503
+5
14
7
U300, U504
+5
1
11
U501
+5
28
14
U301
R4
68.1
+5
C2
.1
1
10
U101

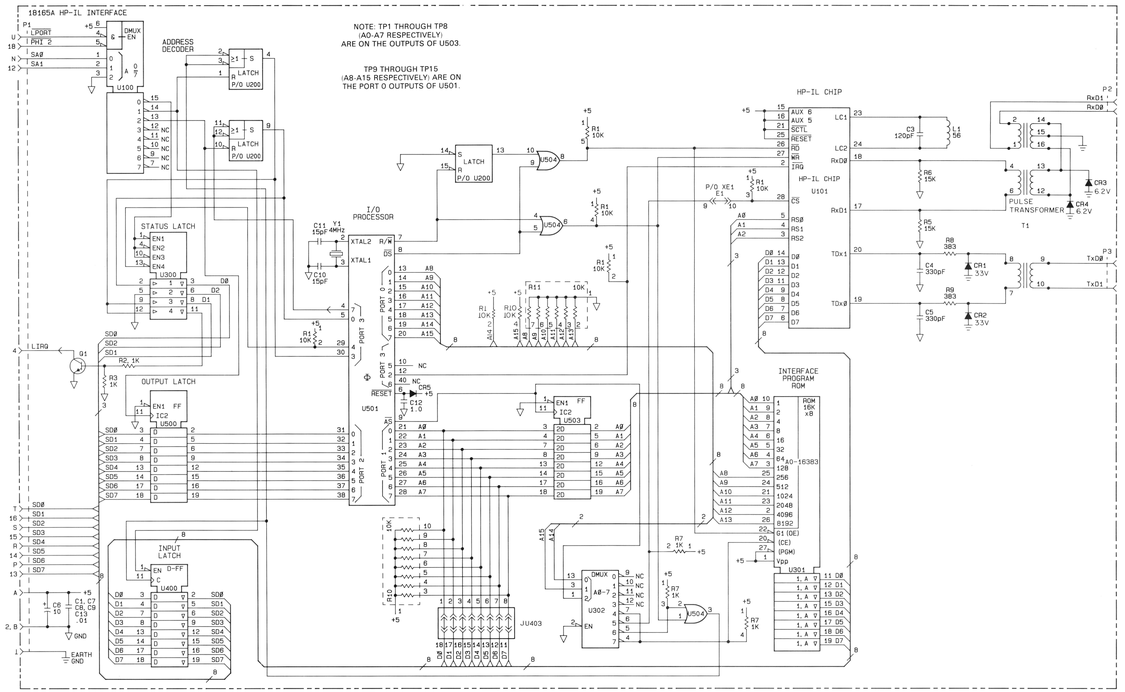
18165A HP-IL INTERFACE
NOTE: TP1 THROUGH TP8 (A0-A7 RESPECTIVELY) ARE ON THE OUTPUTS OF U503.
TP9 THROUGH TP15 (A8-A15 RESPECTIVELY) ARE ON THE PORT 0 OUTPUTS OF U501.
ADDRESS DECODER
STATUS LATCH
OUTPUT LATCH
INPUT LATCH
I/O PROCESSOR
HP-IL CHIP
INTERFACE PROGRAM ROM
HP-IL CABLE
PULSE TRANSFORMER
T1
U100
U200
U300
U400
U500
U501
U503
U504
U101
U301
U302
U303
U304
U401
U402
U403
U404
U405
U406
U407
U408
U409
U410
U411
U412
U413
U414
U415
U416
U417
U418
U419
U420
U421
U422
U423
U424
U425
U426
U427
U428
U429
U430
U431
U432
U433
U434
U435
U436
U437
U438
U439
U440

SALES & SUPPORT OFFICES

Arranged Alphabetically by Country

1

Product Line Sales/Support Key

Key	Product Line
A	Analytical
CM	Components
C	Computer Systems Sales only
CS	Computer Systems Hardware Sales and Services
CSS	Computer Systems Software Sales and Services
E	Electronic Instruments & Measurement Systems
M	Medical Products
MP	Medical Products Primary SRO
MS	Medical Products Secondary SRO
P	Personal Computation Products
-	Sales only for specific product line
*	Support only for specific product line

IMPORTANT: These symbols designate general product line capability. They do not insure sales or support availability for all products within a line, at all locations. Contact these sales office for information regarding locations where HP support is available for specific products.

HP distributors are printed in italics.

ANGOLA
Telectra
Empresa Técnica de Equipamentos Eléctricos, S.A.R.L.
R. Barbosa Rodrigues, 41-1 DT.
Caixa Postal 6487
LUANDA
Tel: 35515,35516
E,M,P

ARGENTINA
Hewlett-Packard Argentina S.A.
Avenida Santa Fe 2035
Martinez 1640 **BUENOS AIRES**
Tel: 798-5735, 792-1293
Telex: 17595 BIONAR
Cable: HEWPACKARG
A,E,CM,CS,P

Biotron S.A.C.I.M. e I.
Av Paseo Colon 221, Piso 9
1399 BUENOS AIRES
Tel: 30-4846, 30-1851
Telex: 17595 BIONAR
M

Fate S.A. I.C.I.Electronica
Venezuela 1326
1095 BUENOS AIRES
Tel: 37-0020, 37-9026/9
Telex: 9234 FATEK AR
P

AUSTRALIA

Adelaide, South Australia Office
Hewlett-Packard Australia Ltd.
153 Greenhill Road
PARKSIDE, S.A. 5063
Tel: 272-5911
Telex: 82536
Cable: HEWPARD Adelaide
A*,CH,M,E,MS,P

Brisbane, Queensland Office
Hewlett-Packard Australia Ltd.
49 Park Road
MILTON, Queensland 4064
Tel: 229-1544
Telex: 42133
Cable: HEWPARD Brisbane
A,CH,CM,E,MP
Effective November 1, 1982:
10 Payne Road
THE GAP, Queensland 4061
Tel: 30-4133
Telex: 42133

Canberra, Australia Capital Territory Office
Hewlett-Packard Australia Ltd.
121 Wollongong Street
FYSHWICK, A.C.T. 2609
Tel: 80 4244
Telex: 62650
Cable: HEWPARD Canberra
A,CH,CM,E,P

Melbourne, Victoria Office
Hewlett-Packard Australia Ltd.
31-41 Joseph Street
BLACKBURN, Victoria 3130
Tel: 877 7777
Telex: 31-024
Cable: HEWPARD Melbourne
A,CH,CM,CS,E,MS,P

Perth, Western Australia Office
Hewlett-Packard (Canada) Ltd.
261 Stirling Highway
CLAREMONT, W.A. 6010
Tel: 383-2188
Telex: 93859
Cable: HEWPARD Perth
A,CH,CM,E,MS,P

Sydney, New South Wales Office
Hewlett-Packard Australia Ltd.
17-23 Talavera Road
P.O. Box 308
NORTH RYDE, N.S.W. 2113
Tel: 887-1611
Telex: 21561
Cable: HEWPARD Sydney
A,CH,CM,CS,E,MS,P

AUSTRIA
Hewlett-Packard Ges.m.b.h.
Grottenhofstrasse 94
Verkaufsbüro Graz
A-8052 **GRAZ**
Tel: 291-5-66
Telex: 32375
CH,E*
Hewlett-Packard Ges.m.b.h.
Slangholweg 5
A-4020 **LINZ**
Tel: 0732 51585
CH
Hewlett-Packard Ges.m.b.h.
Lieblgasse 1
P.O. Box 72
A-1222 **VIENNA**
Tel: (0222) 23-65-11-0
Telex: 134425 HEPA A
A,CH,CM,CS,E,MS,P

BAHRAIN
Green Salon
P.O. Box 557
BAHRAIN
Tel: 255503-253950
Telex: 84419
P
Wael Pharmacy
P.O. Box 648
BAHRAIN
Tel: 256123
Telex: 8550 WAEL BN
M, E

BELGIUM
Hewlett-Packard Belgium S.A./N.V.
Blvd de la Woluwe, 100
Woluwedal
B-1200 **BRUSSELS**
Tel: (02) 762-32-00
Telex: 23-494 paloben bru
A,CH,CM,CS,E,MP,P

BRAZIL
Hewlett-Packard do Brasil I.e.C. Ltda.
Alameda Rio Negro, 750
Alphaville 06400 **BARUERI SP**
Tel: (11) 421-1311
Telex: 01 133872 HPBR-BR
Cable: HEWPACK Sao Paulo
A,CH,CM,CS,E,M,P
Hewlett-Packard do Brasil I.e.C. Ltda.
Avenida Epitacio Pessoa, 4664
22471 RIO DE JANEIRO-RJ
Tel: (21) 286-0237
Telex: 021-21905 HPBR-BR
Cable: HEWPACK Rio de Janeiro
A,CH,CM,E,MS,P*

CANADA

Alberta
Hewlett-Packard (Canada) Ltd.
210, 7220 Fisher Street S.E.
CALGARY, Alberta T2H 2H8
Tel: (403) 253-2713
A,CH,CM,E*,MS,P*

Hewlett-Packard (Canada) Ltd.
11620A-168th Street
EDMONTON, Alberta T5M 3T9
Tel: (403) 452-3670
A,CH,CM,CS,E,MS,P*

British Columbia
Hewlett-Packard (Canada) Ltd.
10691 Shellbridge Way
RICHMOND,
British Columbia V6X 2W7
Tel: (604) 270-2277
Telex: 610 922-5059
A,CH,CM,CS,E*,MS,P*

Manitoba
Hewlett-Packard (Canada) Ltd.
380-550 Century Street
WINNIPEG, Manitoba R3H 0Y1
Tel: (204) 786-6701
A,CH,CM,E,MS,P*

New Brunswick
Hewlett-Packard (Canada) Ltd.
37 Sheadiac Road
MONCTON, New Brunswick E2B 2V2
Tel: (506) 855-2841
CH*

Nova Scotia
Hewlett-Packard (Canada) Ltd.
P.O. Box 931
900 Windmill Road
DARTMOUTH, Nova Scotia B2Y 3Z6
Tel: (902) 469-7820
CH,CM,CS,E*,MS,P*

Ontario
Hewlett-Packard (Canada) Ltd.
552 Newbold Street
LONDON, Ontario N6E 2S5
Tel: (519) 686-9181
A,CH,CM,E*,MS,P*
Hewlett-Packard (Canada) Ltd.
6877 Goreway Drive
MISSISSAUGA, Ontario L4V 1M8
Tel: (416) 678-9430
A,CH,CM,CS,E,MP,P
Hewlett-Packard (Canada) Ltd.
2670 Queensview Dr.
OTTAWA, Ontario K2B 8K1
Tel: (613) 820-6483
A,CH,CM,CS,E*,MS,P*
Hewlett-Packard (Canada) Ltd.
220 Yorkland Blvd., Unit #11
WILLOWDALE, Ontario M2J 1S5
Tel: (416) 499-9333
CH

Quebec
Hewlett-Packard (Canada) Ltd.
17500 South Service Road
Trans-Canada Highway
KIRKLAND, Quebec H9J 2M5
Tel: (514) 697-4232
A,CH,CM,CS,E,MP,P
Hewlett-Packard (Canada) Ltd.
Les Galeries du Vallon
2323 Du Versant Nord
STE. FOY, Quebec G1N 4C2
Tel: (418) 687-4570
CH

CHILE
Jorge Calcagni y Cia. Ltda.
Arturo Burhle 065
Casilla 16475
SANTIAGO 9
Tel: 222-0222
Telex: Public Booth 440001
A,CM,E,M
Olympia (Chile) Ltda.
Av. Rodrigo de Araya 1045
Casilla 256-V
SANTIAGO 21
Tel: 2-25-50-44
Telex: 340-882 OLYMP CK
Cable: Olympachile Santiagochile
CH,CS,P

CHINA, People's Republic
CH,P
China Hewlett-Packard Rep. Office
c/o Fiver Trade
1A Lane 2, Liuchang St.
Beiwei Rd., Xuanwu District
BEIJING
Tel: 33-1947, 33-7426
Telex: 22601 CTSHP CN
Cable: 1920
A,CH,CM,CS,E,P

COLOMBIA
Instrumentación
H. A. Langebaek & Kier S.A.
Carrera 7 No. 48-75
Apartado Aereo 6287
BOGOTA 1, D.E.
Tel: 287-8877
Telex: 44400 INST CO
Cable: AARIS Bogota
A,CM,E,MP,S,P

COSTA RICA
Cemitica Costarricense S.A.
Avenida 2, Calle 5
San Pedro de Montes de Oca
Apartado 10159
SAN JOSE
Tel: 24-38-20, 24-08-19
Telex: 2367 GALGUR CR
CM,E,MS,P

CYPRUS
Telerexa Ltd.
P.O. Box 4809
14C Stassinos Avenue
NICOSIA
Tel: 62698
Telex: 2894 LEVIDO CY
E,M,P

DENMARK
Hewlett-Packard A/S
Datavej 52
DK-3460 **BIRKEROD**
Tel: (02) 81-66-40
Telex: 37409 hpas dk
A,CH,CM,CS,E,MS,P
Hewlett-Packard A/S
Navervej 1
DK-8600 **SILKEBORG**
Tel: (06) 82-71-66
Telex: 37409 hpas dk
CH,E

ECUADOR
CYEDE Cia. Ltda.
Avenida Eloy Alfaro 1749
Casilla 6463 CCI
QUITO
Tel: 545-250, 545-122
Telex: 2465 HOSPTL ED
Cable: HOSPITALAR-Quito
M

EGYPT
International Engineering Associates
24 Hussein Hegazi Street
Kasr-el-Aini
CAIRO
Tel: 23829, 21641
Telex: IEA UN 93830
CH,CS,E,M
Informatic Sy Systems
22 Talaat Harb Street
CAIRO
Tel: 759006
Telex: 93938 FRANK UN
CS,E
Egyptian International Office
for Foreign Trade
P.O.Box 2558
CAIRO
Tel: 650021
Telex: 93337 EGFOR
P

EL SALVADOR
CESA-SE D Salvador S.A.
29 Avenida Norte 1216
SAN SALVADOR
Tel: 26-6558, 26-6868
Telex: Public Booth 20107
CH,CS,E,P

FINLAND
Hewlett-Packard Oy
Revontulentie 7
SF-02100 **ESPOO 10**
Tel: (90) 455-0211
Telex: 12-1563 hewpa sf
A,CH,CM,CS,E,MS,P
Hewlett-Packard Oy
Aatokkenkatu 10-C

2

SALES & SUPPORT OFFICES

Arranged Alphabetically by Country

SF-40720-72 JYVASKYLA
Tel: (941) 218318
CH
Hewlett-Packard Oy
Kainuntie 1-C
SF-90140-14 **OULU**
Tel: (981) 338785
CH

FRANCE
Hewlett-Packard France
Z.I. Mercure B
Rue Berthelot
F-13763 Les Milles Cedex
AIX-EN-PROVENCE
Tel: (42) 59-41-02
Telex: 410770F
A,CH,E,MS,P*
Hewlett-Packard France
Boite Postale No. 503
F-25026 **BESANCON**
28 Rue de la Republique
F-25000 **BESANCON**
Tel: (81) 83-16-22
CH,M
Hewlett-Packard France
Bureau de Vente de Lyon
Chemin des Mouilles
Boite Postale 162
F-69130 **ECULLY Cedex**
Tel: (7) 833-81-25
Telex: 310617F
A,CH,CS,E,MP
Hewlett-Packard France
Immeuble France Evry
Tour Lorraine
Boulevard de France
F-91035 **EVRY Cedex**
Tel: (6) 077-96-60
Telex: 69231SF
E
Hewlett-Packard France
5th Avenue Raymond Chanas
F-38320 **EYBENS**
Tel: (76) 25-81-41
Telex: 980124 HP GRENOB EYBE
CH
Hewlett-Packard France
Centre d'Affaire Paris-Nord
Bâtiment Ampère 5 etage
Rue de la Commune de Paris
Boite Postale 300
F-93153 **LE BLANC MESNIL**
Tel: (01) 865-44-52
Telex: 211032F
CH,CS,E,MS
Hewlett-Packard France
Parc d'Activites Cadera
Quartier Jean-Mermoz
Avenue du Presidents JF Kennedy
F-33700 **MERIGNAC**
Tel: (56) 34-00-84
Telex: 550105F
CH,E,MS
Hewlett-Packard France
32 Rue Lothaire
F-57000 **METZ**
Tel: (8) 765-53-50
CH
Hewlett-Packard France
Immeuble Les 3 B
Nouveau Chemin de la Garde
Z.A.C. de Bois Briand
F-44085 **NANTES Cedex**
Tel: (40) 50-32-22
CH*
Hewlett-Packard France
Zone Industrielle de Courtaboeuf
Avenue des Tropiques
F-91947 Les Ulis Cédex **ORSAY**
Tel: (6) 907-78-25
Telex: 600048F
A,CH,CM,CS,E,MP,P
Hewlett-Packard France
Paris Porte-Maillot
15, Avenue De L'Amiral Bruix
F-75782 **PARIS 16**
Tel: (1) 502-12-20
Telex: 613663F
CH,MS,P
Hewlett-Packard France
2 Allee de la Bourgonnette
F-35100 **RENNES**
Tel: (99) 51-42-44
Telex: 74091F
CH,CM,E,MS,P*
Hewlett-Packard France
98 Avenue de Bretagne
F-76100 **ROUEN**
Tel: (35) 63-57-66 CH* ;CS
Hewlett-Packard France
4 Rue Thomas Mann
Boite Postale 56
F-67200 **STRASBOURG**
Tel: (88) 28-56-46
Telex: 890141F
CH,E,MS,P*
Hewlett-Packard France
Peincentre de la Cépière
F-31081 **TOULOUSE Cedex**
Tel: (61) 40-11-12
Telex: 531639F
A,CH,CS,E,P*
Hewlett-Packard France
Immeuble Péricentre
F-59650 **VILLENEUVE D'ASCQ Cedex**
Tel: (20) 91-41-25
Telex: 160124F
CH,E,MS,P*

GERMAN FEDERAL REPUBLIC
Hewlett-Packard GmbH
Technisches Büro Berlin
Keithstrasse 2-4
D-1000 **BERLIN 30**
Tel: (030) 24-90-86
Telex: 018 3405 hpbln d
A,CH,E,MP
Hewlett-Packard GmbH
Technisches Büro Böblingen
Herrenberger Strasse 110
D-7030 **BÖBLINGEN**
Tel: (07031) 667-1
Telex: bbn o
A,CH,CM,CS,E,MP,P
Hewlett-Packard GmbH
Technisches Büro Düsseldorf
Emanuel-Leutze-Strasse 1
D-4000 **DUSSELDORF**
Tel: (0211) 5971-1
Telex: 085/86 533 hpdü d
A,CH,CS,E,MS,P
Hewlett-Packard GmbH
Vertriebszentrum Frankfurt
Berner Strasse 117
Postfach 560 140
D-6000 **FRANKFURT 56**
Tel: (0611) 50-04-1
Telex: 04 13249 hpffm d
A,CH,CM,CS,E,MP,P
Hewlett-Packard GmbH
Technisches Büro Hamburg
Kapstadtring 5
D-2000 **HAMBURG 60**
Tel: (040) 63804-1
Telex: 021 63 032 hphh d
A,CH,CS,E,MP
Hewlett-Packard GmbH
Technisches Büro Hannover
Am Grossmarkt 6
D-3000 **HANNOVER 91**
Tel: (0511) 46-60-01
Telex: 092 3259
A,CH,CM,E,MS,P
Hewlett-Packard GmbH
Technisches Büro Mannheim
Rossäuer Weg 2-4
D-6800 **MANNHEIM**
Tel: (0621) 70050
Telex: 0462 105
A,C,E
Hewlett-Packard GmbH
Technisches Büro Neu Ulm
Messerschmittstrasse 7
D-7910 **NEU ULM**
Tel: 0731-70241
Telex: 071 2816 HP ULM-D
A,C,E*
Hewlett-Packard GmbH
Technisches Büro Nürnberg
Neumeyersrasse 90
D-8500 **NÜRNBERG**
Tel: (091) 152 20 83-87
Telex: 0623 850
CH,CM,E,MS,P
Hewlett-Packard GmbH
Technisches Büro München
Eschenstrasse 5
D-8028 **TAUFKIRCHEN**
Tel: (089) 6117-1
Telex: 0524985
A,CH,CM,E,MS,P

GREAT BRITAIN
Hewlett-Packard Ltd.
Trafalgar House
Navigation Road
ALTRINCHAM
Cheshire WA14 1NU
Tel: (061) 928-6422
Telex: 668068
A,CH,CS,E,M
Hewlett-Packard Ltd.
Oak-field House, Oak-field Grove
Clifton
BRISTOL BS8 2BN, Avon
Tel: (027) 38606
Telex: 444302
CH,M,P
Hewlett-Packard Ltd.
(Pinewood)
Nine Mile Ride
EASTHAMSTEAD
Wokingham
Berkshire, RG11 3LL
Tel: 3446 3100
Telex: 84-89-05
CH,CS,E
Hewlett-Packard Ltd.
Fourier House
257-263 High Street
LONDON COLNEY
Herts., AL2 1HA, St. Albans
Tel: (0727) 24400
Telex: 1-8952716
CH,CS,E
Hewlett-Packard Ltd
Tradax House, St. Mary's Walk
MAIDENHEAD
Berkshire, SL6 1ST
Tel: (0628) 39151
CH,CS,E,P
Hewlett-Packard Ltd.
Quadrangle
106-118 Station Road
REDHILL, Surrey
Tel: (0737) 68655
Telex: 947234 OHJCS,E
Hewlett-Packard Ltd.
Avon House
435 Stratford Road
SHIRLEY, Solihull
West Midlands B90 4BL
Tel: (021) 745 8800
Telex: 339105
CH

Blue Star Ltd.
Band Box House
Prabhadevi
BOMBAY 400 025
Tel: 422-3101
Telex: 011-3751
Cable: BLUESTAR A.M
Blue Star Ltd.
Sahas
414/2 Vir Savarkar Marg
Prabhadevi
BOMBAY 400 025
Tel: 422-6155
Telex: 011-4093
Cable: FROSTBLUE
A,CH,CM,CS,E,M
Blue Star Ltd.
Kalyan, 19 Vishwas Colony
Alkapuri, BARODA, 390 005
Tel: 65235
Cable: BLUE STAR A
Blue Star Ltd.
7 Hare Street
CALCUTTA 700 001
Tel: 12-01-31
Telex: 021-7655
Cable: BLUESTAR A,M
Blue Star Ltd.
133 Kodambakkam High Road
MADRAS 600 034
Tel: 82057
Telex: 041-379
Cable: BLUESTAR A,M
Blue Star Ltd.
Bhandari House, 7/8/8th Floors
91 Nehru Place
NEW DELHI 110 024
Tel: 682547
Telex: 031-2463
Cable: BLUESTAR A,CH,CM,CS,E,M
Blue Star Ltd.
15/16 C Wellesley Rd.
PUNE 411 011
Tel: 22775
Cable: BLUE STAR A

HONG KONG
Hewlett-Packard Hong Kong, Ltd.
G.P.O. Box 795
5th Floor, Sun Hung Kai Centre
30 Harbour Road
HONG KONG
Tel: 5-8323211
Telex: 66678 HEWPA HX
Cable: HEWPACK HONG KONG
E,CH,CS,P
CET Ltd.
1402 Yung Wo Mansion
199-203 Hennessy Rd.
Wanchai, HONG KONG
Tel: 5-729376
Telex: 85148 CET HX
CH
Schmidt & Co. (Hong Kong) Ltd.
Wing On Centre, 28th Floor
Connaught Road, C.
HONG KONG
Tel: 5-455644
Telex: 74766 SCHMX HX
A,M

ICELAND
Eidrig Trading Company Inc.
Hafnarnvoli-Tryggvagotu
P.O. Box 895
IS-REYKJAVIK
Tel: 1-58-20, 1-53-03
P

INDIA
Blue Star Ltd.
Sabri Complex II Floor
24 Residency Rd.
BANGALORE 560 025
Tel: 55660
Telex: 0845-430
Cable: BLUESTAR A,CH,CM,CS,E

Blue Star Ltd.
Kalai Arangam
Whites Road
MADRAS 600 014
Tel: 86339
Telex: 041-379
Cable: BLUESTAR A,M
Blue Star Ltd.
Bhandari House, 7th/8th Floors
91 Nehru Place
NEW DELHI 110 024
Tel: 682547
Telex: 031-2463
Cable: BLUESTAR A,CH,CM,CS,E,M
Blue Star Ltd.
Kirloskar Bldg.
Fatorda
GOA 403 602
Tel: 21-2775
Cable: BLUE STAR A
Blue Star Ltd.
Sahas
2-3-274/1/2B Bolarum Rd.
SECUNDERABAD 500 003
Tel: 72057
Telex: 0155-459
Cable: BLUEFROST A,E
Blue Star Ltd.
T.C. 7/603 Poonnima
Manoharkkuzhi
TRIVANDRUM 695 013
Tel: 65739
Telex: 0884-259
Cable: BLUESTAR E

INDONESIA
BERCA Indonesia P.T.
P.O. Box 496/JKT.
Jl. Abdul Muis 62
JAKARTA
Tel: 373009
Telex: 46748 BERSAL IA
Cable: BERSAL JAKARTA P
BERCA Indonesia P.T.
Wisma Antara Bldg., 17th floor
JAKARTA
A,CS,E,M
BERCA Indonesia P.T.
P.O. Box 174/SBY.
Jl. Kutei No. 11
SURABAYA
Tel: 68172
Telex: 31146 BERSAL SB
Cable: BERSAL-SURABAYA A,E,M,P*

Hewlett-Packard Italiana S.p.A.
Via Toscana 1/8
I-35100 **PADOVA**
Tel: (049) 664888
Telex: 430315
A,CH,E,MS
Hewlett-Packard Italiana S.p.A.
Viale C. Pavese 340
I-00144 **ROMA**
Tel: (06) 54831
Telex: 610514
A,CH,CM,CS,E,MS,P*
Hewlett-Packard Italiana S.p.A.
Corso Svizzera, 184
I-10149 **TORINO**
Tel: (011) 74 4044
Telex: 221079
CH,E

JAPAN
Yokogawa-Hewlett-Packard Ltd.
Inoue Building
2-2-3, Xagandori, Chuo-ku
KOBE, 650, Hyogo
Tel: (078) 392-4791
C,E
Yokogawa-Hewlett-Packard Ltd.
Kumagaya Asahi Yasgi Bldg 4F
3-4 Chome Tsukuba
KUMAGAYA, Saitama 360
Tel: (0485) 24-6563
CH,CM,E
Yokogawa-Hewlett-Packard Ltd.
Asahi Shinbun Dai-ichi Seimei Bldg.,
2F
4-7 Hanabata-cho
KUMAMOTO 862
Tel: (0963) 54-7311
CH,E
Yokogawa-Hewlett-Packard Ltd.
Shin Kyoto Center Bldg. 5F
614 Sokoji-cho
KYOTO 600
Tel: (075) 344-4411
A,M
Yokogawa-Hewlett-Packard Ltd.
Via Marina Center Bldg., 38/111
4-10-32 Minatogawa
NAGASAKI 850
Tel: (0958) 24-7888
CH,E
Yokogawa-Hewlett-Packard Ltd.
Miki Mitsui Building
1-4-73, San-no-maru
MITO, Ibaraqi 310
Tel: (0292) 25-7470
CH,CM,E
Yokogawa-Hewlett-Packard Ltd.
Sumitomo Seimei Nagoya Bldg.
2-14-19, Meieki-Minami,
Nakamura-ku
NAGOYA, 450 Aichi
Tel: (052) 571-5171
CH,CM,E
Yokogawa-Hewlett-Packard Ltd.
Chuo Bldg., 4th Floor
5-4-20 Nishnak-jajima,
Yodogawa-ku
OSAKA, 532
Tel: (06) 304-6021
Telex: YHPOSA 523-3624
A,CH,CM,CS,E,MP,P
Yokogawa-Hewlett-Packard Ltd.
1-27-15, Yabe,
SAGAMIHARA Kanagawa, 229
Tel: 0427 59-1311
Yokogawa-Hewlett-Packard Ltd.
Shinjuku Dai-ichi Seimei 6F
2-7-1, Nishi Shinjuku
Shinjuku-ku, **TOKYO** 160
Tel: 03-348-4511-5
CH,E

Yokogawa-Hewlett-Packard Ltd.
3-29-21 Takaido-Higashi
Suginami-ku **TOKYO** 168
Tel: (03) 331-6111
Telex: 232-2024 YHPTOK
A,CH,CM,CS,E,MP,P
Yokogawa-Hewlett-Packard Ltd.
Daiichi Asano Building 4F
5-2-8, Dodori,
UTSUNOMIYA, 320
Tochigi
Tel: (0286) 25-7155
CH,E
Yokogawa-Hewlett-Packard Ltd.
Yatsudasemei Yokohama
Shopping Bldg.
3-30-4 Tsunaya-cho
Kanagawa-ku
YOKOHAMA, Kanagawa, 221
Tel: (045) 312-1252
CH,E

JORDAN
Mousatter Cousins Company
P.O. Box 1387
AMMAN
Tel: 24907, 39907
Telex: 21456 SABCO JO
CH,E
Electronics Engineering Division
Modernist Israel Ltd.
16 Kremenetski Street
P.O. Box 25016
TEL-AVIV 67899
Tel: 3-338972
Telex: 33569 Modil IL
Cable: BASTEL Tel-Aviv
CH,CM,CS,E,M,P

ITALY
Hewlett-Packard Italiana S.p.A.
Traversa 99C
Via Giulio Pittoni, 19
I-70124 **BARI**
Tel: (080) 41-07-44
M
Hewlett-Packard Italiana S.p.A.
Via Pancali 94/A
I-20091 **BRESSO (MI)**
Tel: (02) 6251-1
Telex: 334632 HEWPACK I
A,CH,CM,CS,E,MS,P
Hewlett-Packard Italiana S.p.A.
Via Principe Nicola 43G/C
I-95126 **CATANIA**
Tel: (095) 37-1441
Telex: 970291
C,P
Hewlett-Packard Italiana S.p.A.
Via G. Di Vittorio 9
I-20063 **CERNUSCO SUL NAVIGLIO**
Tel: (2) 9036901
Telex: 334632
A,CH,CM,E,MP,P
Hewlett-Packard Italiana S.p.A.
Via Nuova San Rocco a
Capodimonte, 62/A
I-80131 **NAPLES**
Tel: (081) 7413544
Telex: 710698
A,CH,E
Hewlett-Packard Italiana S.p.A.
Viale G. Modugno 33
I-16156 **GENOVA PEGLI**
Tel: (010) 68-37-07
Telex: 215238
E,C

Hewlett-Packard Nederland B.V.
Weegest 2
NL 2906VK **CAPELLE,** ijssel
Tel: (10) 51-64-44
Telex: 21261 HEPAC NL
A,CH,CS

NEW ZEALAND
Hewlett-Packard (N.Z.) Ltd.
169 Manukau Road
P.O. Box 26-189
Epsom, **AUCKLAND**
Tel: 687-159
Cable: HEWPACK Auckland
CH,CM,E,P*
Hewlett-Packard (N.Z.) Ltd.
4-12 Cruickshank Street
Kilbirnie, **WELLINGTON 3**
P.O. Box 9443
Courtenay Place, **WELLINGTON 3**
Tel: 877-199
Cable: HEWPACK Wellington
CH,CM,E,P
Northrop Instruments & Systems Ltd.
Sturdee House
85-87 Ghuznee Street
P.O. Box 2406
WELLINGTON
Tel: 850-091
Telex: NZ 3380
A,M

NORTHERN IRELAND
Cardiac Services Company
95A Finaghy Road South
BELFAST BT 10 0BY
Tel: (0232) 625-566
Telex: 747626
M

NORWAY
Hewlett-Packard Norge A/S
Folke Bernadottes vei 50
P.O. Box 3558
N-5033 **FYLLINGSDALEN (Bergen)**
Tel: (05) 16-55-40
Telex: 16621 hpnas n
CH,CS,E,MS
Hewlett-Packard Norge A/S
Ostensjoveien 18
P.O. Box 34
N-1345 **OSTERAS**
Tel: (02) 17-11-80
Telex: 16621 hpnas n
A,CH,CM,CS,E,M,P

OMAN
Khimji Ramdas
P.O. Box 19
MUSCAT
Tel: 722225, 745601
Telex: 3289 BROKER MB MUSCAT
P

MALAYSIA
Hewlett-Packard Sales (Malaysia)
Sdn. Bhd.
1st Floor, Bangunan British
American
Jalan Semantan, Damansara Heights
KUALA LUMPUR 23-03
Tel: 943022
Telex: MA31011
A,CH,E,M,P*
Protel Engineering
Lot 319, Satok Road
P.O. Box 1917
Kuching, SARAWAK
Tel: 53544
Telex: MA 70904 PROMAL
Cable: PROTELENG
A,E,M

MALTA
Philip Toledo Ltd.
Notabile Rd.
MRIEHEL
Tel: 447 47, 455 66
Telex: 649 Media MW
P

MEXICO
Hewlett-Packard Mexicana, S.A. de C.V.
Av. Periferico Sur No. 6501
Tepepan, Xochimilco
MEXICO 23 D.F.
Tel. 676-4600
Telex: 17-74-507 HEWPACK MEX
A,CH,CS,E,MS,P
Effective November 1, 1982:
Hewlett-Packard Mexicana, S.A. de C.V.
Blvd. de la Palma 535
Lomas Altas
11950 **MEXICO, D.F.**
Tel. 596-4600
Telex: 17-74-507 HEWPACK MEX
A,CH,CS,E,MS,P

MOROCCO
Dolbeau
81 rue Karatchi
CASABLANCA
Tel: 304-82, 3068-28
Telex: 23051, 22822
E
Gerap
2 rue d'Agadir
Boite Postale 156
CASABLANCA
Tel: 272063, 272095
Telex: 23 739
P

NETHERLANDS
Hewlett-Packard Nederland B.V.
Van Heuven Goedhartlaan 121
NL 1181KK **AMSTELVEEN**
P.O. Box 667
NL 1180MD **AMSTELVEEN**
Tel: (20) 47-20-21
Telex: 13 216
A,CH,CM,CS,E,MP,P

Yokogawa-Hewlett-Packard Ltd.
Sugiyama Building, A/D Ijesseil
1-35-28 Hiroo, Shibuya-ku
TOKYO 150
Tel: (03) 448-4611
Telex: 781-24832 YHPTOK
A,CH,CM,CS,E,MP,P

KENYA
ADCOM Ltd., Inc., Kenya
P.O.Box 30070
NAIROBI
Tel: 331955
Telex: 22639
E,M

KOREA
Samsung Electronics Computer Division
76-581 Yeoksam-Dong
Kangnam-Ku
C.P.O. Box 2775
SEOUL
Tel: 555-5555, 555-5447
Telex: K27364 SAMSAN
A,CH,CM,CS,E,M,P

KUWAIT
Al-Khaldiya Trading & Contracting
P.O. Box 830 Safat
KUWAIT
Tel: 42-4910, 41-1726
Telex: 22481 Areeg kt
CH,E,M
Photo & Cine Equipment
P.O. Box 270 Safat
KUWAIT
Tel: 42-2846, 42-3801
Telex: 22247 Matin kt
P,M

LEBANON
G.M. Dolmadjian
Achrafieh
P.O. Box: 165.167
BEIRUT
Tel: 290293
*MP**

LUXEMBOURG
Hewlett-Packard Belgium S.A./N.V.
Blvd de la Woluwe, 100
Woluwedal
B-1200 **BRUSSELS**
Tel: (02) 762-32-00
Telex: 23-494 paloben bru
A,CH,CM,CS,E,MP,P

SINGAPORE
Hewlett-Packard Singapore (Pty.) Ltd.
P.O. Box 58 Alexandra Post Office
SINGAPORE, 9115
6th Floor, Inchcape House
450-452 Alexandra Road
SINGAPORE 0511
Tel: 631788
Telex: HPSGSO RS 34209
Cable: HEWPACK, Singapore
A,CH,CS,E,MP,P
Dynamar International Ltd.
Unit 05-11 Block 6
Kolam Ayer Industrial Estate
SINGAPORE 1334
Tel: 747-1788
Telex: RS 28283
CM

SOUTH AFRICA
Hewlett-Packard So Africa (Pty.) Ltd.
P.O. Box 120
Howard Place
Pine Park Center, Forest Drive,
Pinelands
CAPE PROVINCE 7405
Tel: 53-7954
Telex: 57-20006
A,CH,CM,E,MS,P
Hewlett-Packard So Africa (Pty.) Ltd.
Stalhofdagpark, 9 Xsis
Box 19
S- 16393 **SPANGA**
Tel: (08) 750-2000
Telex: (854) 17886
A,CH,CM,CS,E,MS,P
Hewlett-Packard So Africa (Pty.) Ltd.
6 Linton Arcade
511 Cape Road
Linton Grange
PORT ELIZABETH 6001
Tel: 041-302148
CH
Hewlett-Packard So Africa (Pty.) Ltd.
P.O. Box 33345
Glenstantia 0010 **TRANSVAAL**
1st Floor East
Constantia Park Ridge Shopping Centre
Constantia Park
PRETORIA
Tel: 982043
Telex: 32163
CH,E
Hewlett-Packard So Africa (Pty.) Ltd.
Private Bag Wendywood
SANDTON 2144
Tel: 802-5111, 802-5125
Telex: 4-20877
Cable: HEWPACK Johannesburg
A,CH,CM,CS,E,MS,P

SPAIN
Hewlett-Packard Española S.A.
c/Entenza, 321
E-BARCELONA 29
Tel: (3) 322-24-51, 321-73-54
Telex: 52603 hpbee
A,CH,CS,E,MS,P
Hewlett-Packard Española S.A.
c/San Vicente S/N
Edificio Alfa R.T.B.
E-**BILBAO** 1
Tel: (4) 23-8306, (4) 23-8206
CH,E,MS
Hewlett-Packard Española S.A.
Calle Jerez 3
E-**MADRID** 16
Tel: (1) 458-2600
Telex: 235-15 hpe
A,CM,E

SWEDEN
Hewlett-Packard Sverige AB
Lunavägen 14K
S-22526 **LUND**
Tel: (046) 13-69-79
Telex: (854) 17886 (via SPÅNGA office)
CH
Hewlett-Packard Sverige AB
Vastra Vintergatan 9
S-70344 **ÖREBRO**
Tel: (19) 10-48-80
Telex: 857 17886 (via SPÅNGA office)
CH
Hewlett-Packard Sverige AB
Skalholtsgatan 9, Kista
Box 19
S- 16393 **SPÅNGA**
Tel: (08) 750-2000
Telex: (854) 17886
A,CH,CM,CS,E,MS,P
Hewlett-Packard Sverige AB
Frötallsgatan 30
S-42132 **VÄSTRA FRÖLUNDA**
Tel: (031) 49-09-50
Telex: (854) 17886 (via SPÅNGA office)
CH,E,P

SWITZERLAND
Hewlett-Packard (Schweiz) AG
Clarastrasse 12
CH-4058 **BASLE**
Tel: (61) 33-59-20
A
Hewlett-Packard (Schweiz) AG
Bahnhofweg 44
CH-3018 **BERN**
Tel: (031) 56-24-22
CH
Hewlett-Packard (Schweiz) AG
47 Avenue Blanc
CH-1202 **GENEVA**
Tel: (022) 98-48-00
CH,CM,CS
Hewlett-Packard (Schweiz) AG
Zürcherstrasse 20
CH-8952 **SCHLIEREN**
Tel: (01) 98-18-21
Telex: 53933 hpag ch
Cable: HPAG CH
A,CH,CM,CS,E,MS,P
Bruno Blaser
Bahnhofstrasse 20
CH-8212 NEUHAUSEN
Tel: (053) 3-26-26
Telex: 57933 BLAS CH
P

SYRIA
General Electronic Inc.

UNITED KINGDOM

see: GREAT BRITAIN

NORTHERN IRELAND

SCOTLAND

UNITED STATES

Alabama

Hewlett-Packard Co.
700 Century Park South
Suite 128
BIRMINGHAM, AL 35226
Tel: (205) 822-6802
CH,MP

Hewlett-Packard Co.
P.O. Box 4207
8290 Whitesburg Drive, S.E.
HUNTSVILLE, AL 35802
Tel: (205) 881-4591
CH,CM,CS,E,M*

Alaska

Hewlett-Packard Co.
1577 "C" Street, Suite 252
ANCHORAGE, AK 99501
Tel: (907) 276-5709
CH*

Arizona

Hewlett-Packard Co.
2336 East Magnolia Street
PHOENIX, AZ 85034
Tel: (602) 273-8000
A,CH,CM,CS,E,MS

Hewlett-Packard Co.
2424 East Aragon Road
TUCSON, AZ 85706
Tel: (602) 889-4631
CH,E,MS**

Arkansas

Hewlett-Packard Co.
P.O. Box 5646
Brady Station
LITTLE ROCK, AR 72215
111 N. Filmore
LITTLE ROCK, AR 72205
Tel: (501) 664-8773, 376-1844
MS

California

Hewlett-Packard Co.
99 South Hill Dr.
BRISBANE, CA 94005
Tel: (415) 330-2500
CH,CS

Hewlett-Packard Co.
7621 Canoga Avenue
CANOGA PARK, CA 91304
Tel: (213) 702-8300
A,CH,CS,E,P

Hewlett-Packard Co.
5060 Clinton Avenue
FRESNO, CA 93727
Tel: (209) 252-9652
MS

Hewlett-Packard Co.
P.O. Box 4230
1430 East Orangethorpe
FULLERTON, CA 92631
Tel: (714) 870-1000
CH,CM,CS,E,MP

Hewlett-Packard Co.
320 S. Kellogg, Suite B
GOLETA, CA 93117
Tel: (805) 967-3405
CH

Hewlett-Packard Co.
5400 W. Rosecrans Boulevard
LAWNDALE, CA 90260
P.O. Box 92105
LOS ANGELES, CA 90009
Tel: (213) 970-7500
Telex: 910-325-6608
CH,CM,CS,MP

Hewlett-Packard Co.
3200 Hillview Avenue
PALO ALTO, CA 94304
Tel: (415) 857-8000
CH,CS,E

Hewlett-Packard Co.
P.O. Box 15976 (95813)
4244 So. Market Court, Suite A
SACRAMENTO, CA 95834
Tel: (916) 929-7222
A*,CH,CS,E,MS

Hewlett-Packard Co.
9606 Aero Drive
P.O. Box 23333
SAN DIEGO, CA 92123
Tel: (714) 279-3200
CH,CM,CS,E,MP

Hewlett-Packard Co.
2305 Camino Ramon "C"
SAN RAMON, CA 94583
Tel: (415) 838-5900
CH,CS

Hewlett-Packard Co.
P.O. Box 4230
Fullerton, CA 92631
363 Brookhollow Drive
SANTA ANA, CA 92705
Tel: (714) 641-0977
A,CH,CM,CS,MP

Hewlett-Packard Co.
Suite A
5553 Hollister
SANTA BARBARA, CA 93111
Tel: (805) 964-3390

Hewlett-Packard Co.
3003 Scott Boulevard
SANTA CLARA, CA 95050
Tel: (408) 988-7000
A,CH,CM,CS,E,MP

Hewlett-Packard Co.
5703 Corsa Avenue
WESTLAKE VILLAGE, CA 91362
Tel: (213) 706-6800
E*,CH*,CS*

Colorado

Hewlett-Packard Co.
24 Inverness Place, East
ENGLEWOOD, CO 80112
Tel: (303) 771-3455
Telex: 910-935-0785
A,CH,CM,CS,E,MS

Connecticut

Hewlett-Packard Co.
47 Barnes Industrial Road South
P.O. Box 5007
WALLINGFORD, CT 06492
Tel: (203) 265-7801
A,CH,CM,CS,E,MS

Florida

Hewlett-Packard Co.
P.O. Box 24210 (33307)
2901 N.W. 62nd Street
FORT LAUDERDALE, FL 33307
Tel: (305) 973-2600
CH,CS,E,MP

Hewlett-Packard Co.
4080 Woodcock Drive, #132
Brownett Building
JACKSONVILLE, FL 32207
Tel: (904) 398-0663
C*,E*,MS**

Hewlett-Packard Co.
1101 W. Hibiscus Ave., Suite E210
MELBOURNE, FL 32901
Tel: (305) 729-0704
E*

Hewlett-Packard Co.
P.O. Box 13910 (32859)
6177 Lake Ellenor Drive
ORLANDO, FL 32809
Tel: (305) 859-2900
A,CH,CM,CS,E,MS

Hewlett-Packard Co.
6425 N. Pensacola Blvd.
Suite 4, Building 1
P.O. Box 12826
PENSACOLA, FL 32575
Tel: (904) 476-8422
A,MS

Hewlett-Packard Co.
5750B N. Hoover Blvd., Suite 123
TAMPA, FL 33614
Tel: (813) 884-3282
A*,CH,CM,CS,E*,M*

Georgia

Hewlett-Packard Co.
P.O. Box 105005
ATLANTA, GA 30348
2000 South Park Place
ATLANTA, GA 30339
Tel: (404) 955-1500
Telex: 810-766-4890
A,CH,CM,CS,E,MP

Hewlett-Packard Co.
P.O. Box 816 (80903)
2531 Center West Parkway
Suite 110
AUGUSTA, GA 30904
Tel: (404) 736-0592
MS

Hewlett-Packard Co.
200-E Montgomery Cross Rds.
SAVANNAH, GA 31401
Tel:(912) 925-5358
CH**

Hewlett-Packard Co.
P.O. Box 2103
WARNER ROBINS, GA 31099
1172 N. Davis Drive
WARNER ROBINS, GA 31093
Tel: (912) 923-8831
E

Hawaii

Hewlett-Packard Co.
Kawaiahao Plaza, Suite 190
567 South King Street
HONOLULU, HI 96813
Tel: (808) 526-1555
A,CH,E,MS

Illinois

Hewlett-Packard Co.
211 Prospect Road, Suite C
BLOOMINGTON, IL 61701
Tel: (309) 662-9411
CH,MS**

Hewlett-Packard Co.
1100 31st Street, Suite 100
DOWNERS GROVE, IL 60515
Tel: (312) 960-5760
CH,CS

Hewlett-Packard Co.
5201 Tollview Drive
ROLLING MEADOWS, IL 60008
Tel: (312) 255-9800
A,CH,CM,CS,E,MP

Indiana

Hewlett-Packard Co.
P.O. Box 50807
7301 No. Shadeland Avenue
INDIANAPOLIS, IN 46250
Tel: (317) 842-1000
A,CH,CM,CS,E,MS

Iowa

Hewlett-Packard Co.
1776 22nd Street, Suite 1
WEST DES MOINES, IA 50265
Tel: (515) 224-1435
CH,MS**

Hewlett-Packard Co.
2415 Heinz Road
IOWA CITY, IA 52240
Tel: (319) 351-1020
CH,E*,MS

Kansas

Hewlett-Packard Co.
1644 S. Rock Road
WICHITA, KA 67207
Tel: (316) 684-8491
CH

Kentucky

Hewlett-Packard Co.
10300 Linn Station Road
Suite 100
LOUISVILLE, KY 40223
Tel: (502) 426-0100
A,CH,CS,MS

Louisiana

Hewlett-Packard Co.
8126 Calais Bldg.
BATON ROUGE, LA 70806
Tel: (504) 467-4100
A**,CH**

Hewlett-Packard Co.
P.O. Box 1449
KENNER, LA 70062
160 James Drive East
DESTAHAN, LA 70047
Tel: (504) 467-4100
A,CH,CS,E,MS

Maryland

Hewlett-Packard Co.
7121 Standard Drive
HANOVER, MD 21076
Tel: (301) 796-7700
Telex: 710-862-1943
Eff. Dec. 1, 1982
3701 Koppers St.
BALTIMORE, MD 21227
Tel: (301) 644-5800
A,CH,CM,CS,E,MS

Hewlett-Packard Co.
2 Choke Cherry Road
ROCKVILLE, MD 20850
Tel: (301) 948-6370
A,CH,CM,CS,E,MP

Massachusetts

Hewlett-Packard Co.
32 Hartwell Avenue
LEXINGTON, MA 02173
Tel: (617) 861-8960
A,CH,CM,CS,E,MP

Michigan

Hewlett-Packard Co.
23855 Research Drive
FARMINGTON HILLS, MI 48024
Tel: (313) 476-6400
A,CH,CM,CS,E,MP

Hewlett-Packard Co.
4326 Cascade Road S.E.
GRAND RAPIDS, MI 49506
Tel: (616) 957-1970
CH,CS,MS

Hewlett-Packard Co.
1771 W. Big Beaver Road
TROY, MI 48084
Tel: (313) 643-6474
CH,CS

Minnesota

Hewlett-Packard Co.
2025 W. Larpenteur Ave.
ST. PAUL, MN 55113
Tel: (612) 644-1100
A,CH,CM,CS,E,MP

Mississippi

Hewlett-Packard Co.
P.O. Box 5028
1675 Lakeland Drive
JACKSON, MS 39216
Tel: (601) 982-9363
MS

Missouri

Hewlett-Packard Co.
11131 Colorado Avenue
KANSAS CITY, MO 64137
Tel: (816) 763-8000
A,CH,CM,CS,E,MS

Hewlett-Packard Co.
P.O. Box 27307
1024 Executive Parkway
ST. LOUIS, MO 63141
Tel: (314) 878-0200
A,CH,CS,E,MP
Effective September 1982:
13001 Hollenberg Drive
BRIDGETON, MO 63044

Nebraska

Hewlett-Packard
7101 Mercy Road
Suite 101, IBX Building
OMAHA, NE 68106
Tel: (402) 392-0948
CM,MS

Nevada

Hewlett-Packard Co.
Suite D-130
5030 Paradise Blvd.
LAS VEGAS, NV 89119
Tel: (702) 736-6610
MS**

New Jersey

Hewlett-Packard Co.
W120 Century Road
PARAMUS, NJ 07652
Tel: (201) 265-5000
A,CH,CM,CS,E,MP

Hewlett-Packard Co.
60 New England Av. West
PISCATAWAY, NJ 08854
Tel: (201) 981-1199
A,CH,CM,CS,E

New Mexico

Hewlett-Packard Co.
P.O. Box 11634
ALBUQUERQUE, NM 87112
11300 Lomas Blvd.,N.E.
ALBUQUERQUE, NM 87123
Tel: (505) 292-1330
Telex: 910-989-1185
CH,CS,E,MS

New York

Hewlett-Packard Co.
5 Computer Drive South
ALBANY, NY 12205
Tel: (518) 458-1550
Telex: 710-444-4691
A,CH,E,MS

Hewlett-Packard Co.
P.O. Box 297
9600 Main Street
CLARENCE, NY 14031
Tel: (716) 759-8621
Telex: 710-523-1893
CH

Hewlett-Packard Co.
200 Cross Keys Office
FAIRPORT, NY 14450
Tel: (716) 223-9950
Telex: 510-253-0092
CH,CM,CS,E,MS

Hewlett-Packard Co.
7641 Henry Clay Blvd.
LIVERPOOL, NY 13088
Tel: (315) 451-1820
A,CH,CM,E,MS

Hewlett-Packard Co.
No. 1 Pennsylvania Plaza
55th Floor
34th Street & 8th Avenue
NEW YORK, NY 10119
Tel: (212) 971-0800
CH,CS,E*,M*

SALES & SUPPORT OFFICES

Arranged Alphabetically by Country

Hewlett-Packard Co.
250 Westchester Avenue
WHITE PLAINS, NY 10604
CM,CH,CS,E

Hewlett-Packard Co.
3 Crossways Park West
WOODBURY, NY 11797
Tel: (516) 921-0300
Telex: 510-221-2183
A,CH,CM,CS,E,MS

North Carolina

Hewlett-Packard Co.
4915 Water's Edge Drive
Suite 160
RALEIGH, NC 27606
Tel: (919) 851-3021
C,M

Hewlett-Packard Co.
P.O. Box 26500
5605 Roanne Way
GREENSBORO, NC 27450
Tel: (919) 852-1800
A,CH,CM,CS,E,MS

Ohio

Hewlett-Packard Co.
9920 Carver Road
CINCINNATI, OH 45242
Tel: (513) 891-9870
CH,CS,MS

Hewlett-Packard Co.
16500 Sprague Road
CLEVELAND, OH 44130
Tel: (216) 243-7300
Telex: 810-423-9430
A,CH,CM,CS,E,MS

Hewlett-Packard Co.
962 Crupper Ave.
COLUMBUS, OH 43229
Tel: (614) 436-1041
CH,CM,CS,E*

Hewlett-Packard Co.
P.O. Box 280
330 Progress Rd.
DAYTON, OH 45449
Tel: (513) 859-8202
A,CH,CM,E*,MS

Oklahoma

Hewlett-Packard Co.
P.O. Box 32008
Oklahoma City, OK 73123
1503 W. Gore Blvd., Suite #2
LAWTON, OK 73505
Tel: (405) 248-4248
C

Hewlett-Packard Co.
P.O. Box 32008
OKLAHOMA CITY, OK 73123
304 N. Meridian Avenue, Suite A
OKLAHOMA CITY, OK 73107
Tel: (405) 946-9499
A*,CH,E*,MS

Hewlett-Packard Co.
Suite 121
9920 E. 42nd Street
TULSA, OK 74145
Tel: (918) 665-3300
A**,CH,CS,M*

Oregon

Hewlett-Packard Co.
1500 Valley River Drive
Suite 330
EUGENE, OR 97401
Tel: (503) 683-8075
C

Hewlett-Packard Co.
9255 S. W. Pioneer Court
WILSONVILLE, OR 97070
Tel: (503) 682-8000
A,CH,CS,E*,MS

Pennsylvania

Hewlett-Packard Co.
1021 8th Avenue
King of Prussia Industrial Park
KING OF PRUSSIA, PA 19406
Tel: (215) 265-7000
Telex: 510-660-2670
A,CH,CM,CS,E,MP

Hewlett-Packard Co.
111 Zeta Drive
PITTSBURGH, PA 15238
Tel: (412) 782-0400
A,CH,CS,E,MP

South Carolina

Hewlett-Packard Co.
P.O. Box 21708
Brookside Park, Suite 122
1 Harbison Way
COLUMBIA, SC 29210
Tel: (803) 732-0400
CH,E,MS

Hewlett-Packard Co.
Koger Executive Center
Chesterfield Bldg., Suite 124
GREENVILLE, SC 29615
Tel: (803) 748-5601
C

Tennessee

Hewlett-Packard Co.
P.O. Box 22490
224 Peters Road
Suite 102
KNOXVILLE, TN 37922
Tel: (615) 691-2371
A*,CH,MS

Hewlett-Packard Co.
3070 Directors Row
MEMPHIS, TN 38131
Tel: (901) 346-8370
A,CH,MS

Hewlett-Packard Co.
230 Great Circle Road
Suite 216
NASHVILLE, TN 32228
Tel: (615) 255-1271
MS**

Texas

Hewlett-Packard Co.
Suite 310W
7800 Shoalcreek Blvd.
AUSTIN, TX 78757
Tel: (512) 459-3143
E

Hewlett-Packard Co.
Suite C-110
4171 North Mesa
EL PASO, TX 79902
Tel: (915) 533-3555, 533-4489
CH,E*,MS**

Hewlett-Packard Co.
5020 Mark IV Parkway
FORT WORTH, TX 76106
Tel: (817) 625-6361
CH,CS*

Hewlett-Packard Co.
P.O. Box 42816
HOUSTON, TX 77042
10535 Harwin Street
HOUSTON, TX 77036
Tel: (713) 776-6400
A,CH,CM,CS,E,MP

Hewlett-Packard Co.
3309 67th Street
Suite 24
LUBBOCK, TX 79413
Tel: (806) 799-4472
M

Hewlett-Packard Co.
417 Nolana Gardens, Suite C
P.O. Box 2256
McALLEN, TX 78501
Tel: (512) 781-3226
CH,CS

Hewlett-Packard Co.
P.O. Box 1270
RICHARDSON, TX 75080
930 E. Campbell Rd.
RICHARDSON, TX 75081
Tel: (214) 231-6101
A,CH,CM,CS,E,MP

Hewlett-Packard Co.
P.O. Box 32993
SAN ANTONIO, TX 78216
1020 Central Parkway South
SAN ANTONIO, TX 78232
Tel: (512) 494-9336
CH,CS,E,MS

Utah

Hewlett-Packard Co.
P.O. Box 26626
3530 W. 2100 South
SALT LAKE CITY, UT 84119
Tel: (801) 974-1700
A,CH,CS,E,MS

Virginia

Hewlett-Packard Co.
P.O. Box 9669
2914 Hungary Spring Road
RICHMOND, VA 23228
Tel: (804) 285-3431
A,CH,CS,E,MS

Hewlett-Packard Co.
3106 Peters Creek Road, N.W.
ROANOKE, VA 24019
Tel: (703) 563-2205
CH,E**

Hewlett-Packard Co.
5700 Thurston Avenue
Suite 111
VIRGINIA BEACH, VA 23455
Tel: (804) 460-2471
CH,MS

Washington

Hewlett-Packard Co.
15815 S.E. 37th Street
BELLEVUE, WA 98006
Tel: (206) 643-4000
A,CH,CM,CS,E,MP

Hewlett-Packard Co.
Suite A
708 North Argonne Road
SPOKANE, WA 99206
Tel: (509) 922-7000
CH,CS

West Virginia

Hewlett-Packard Co.
4604 MacCorkle Ave., S.E.
CHARLESTON, WV 25304-4297
Tel: (304) 925-0492
A,MS

Wisconsin

Hewlett-Packard Co.
150 S. Sunny Slope Road
BROOKFIELD, WI 53005
Tel: (414) 784-8800
A,CH,CS,E*,MP

URUGUAY

Pablo Ferrando S.A.C. e I.
Avenida Italia 2877
Casilla de Correo 370
MONTEVIDEO
Tel: 80-2586
Telex: Public Booth 901
A,CM,E,M

Guillermo Kraft del Uruguay S.A.
Av. Lib. Brig. Gral. Lavalleja 2083
MONTEVIDEO
Tel: 234588, 234808, 208830
Telex: 22030 ACTOUR UY
P

VENEZUELA

Hewlett-Packard de Venezuela C.A.
3A Transversal Los Ruices Norte
Edificio Segre
Apartado 50933
CARACAS 1071
Tel: 239-4133
Telex: 25146 HEWPACK
A,CH,CS,E,MS,P

Colimodio S.A.
Este 2 - Sur 21 No. 148
Apartado 1053
CARACAS 1010
Tel: 571-3511
Telex: 21529 COLMODIO
M

ZIMBABWE

Field Technical Sales
45 Kelvin Road, North
P.B. 3458
SALISBURY
Tel: 705 231
Telex: 4-122 RH
C,E,M,P

Headquarters offices

If there is no sales office listed for your area, contact one of these headquarters offices.

NORTH/CENTRAL AFRICA

Hewlett-Packard S.A.
7 Rue du Bois-du-Lan
CH-1217 **MEYRIN 2**, Switzerland
Tel: (022) 98-96-51
Telex: 27835 hpse
Cable: HEWPACKSA Geneve

ASIA

Hewlett-Packard Asia Ltd.
6th Floor, Sun Hung Kai Center
30 Harbor Rd.
G.P.O. Box 795
HONG KONG
Tel: 5-832 3211
Telex: 66678 HEWPA HX
Cable: HEWPACK HONG KONG

CANADA

Hewlett-Packard (Canada) Ltd.
6877 Goreway Drive
MISSISSAUGA, Ontario L4V 1M8
Tel: (416) 678-9430
Telex: 610-492-4246

EASTERN EUROPE

Hewlett-Packard Ges.m.b.h.
Lieblgasse 1
P.O.Box 72
A-1222 **VIENNA**, Austria
Tel: (222) 2365110
Telex: 1 3 4425 HEPA A

NORTHERN EUROPE

Hewlett-Packard S.A.
Uilenstede 475
NL-1183 AG **AMSTELVEEN**
The Netherlands
P.O.Box 999
NL-1180 AZ **AMSTELVEEN**
The Netherlands
Tel: 20 437771

OTHER EUROPE

Hewlett-Packard S.A.
7 Rue du Bois-du-Lan
CH-1217 **MEYRIN 2**, Switzerland
Tel: (022) 98-96-51
Telex: 27835 hpse
Cable: HEWPACKSA Geneve
(Offices in the World Trade Center)

MEDITERRANEAN AND MIDDLE EAST

Hewlett-Packard S.A.
Mediterranean and Middle East Operations
Atrina Centre
32 Kifissias Ave.
Maroussi, **ATHENS**, Greece
Tel: 682 88 11
Telex: 21-6588 HPAT GR
Cable: HEWPACKSA Athens

EASTERN USA

Hewlett-Packard Co.
4 Choke Cherry Road
Rockville, MD 20850
Tel: (301) 258-2000

MIDWESTERN USA

Hewlett-Packard Co.
5201 Tollview Drive
ROLLING MEADOWS, IL 60008
Tel: (312) 255-9800

SOUTHERN USA

Hewlett-Packard Co.
P.O. Box 105005
450 Interstate N. Parkway
ATLANTA, GA 30339
Tel: (404) 955-1500

WESTERN USA

Hewlett-Packard Co.
3939 Lankersim Blvd.
LOS ANGELES, CA 91604
Tel: (213) 877-1282

OTHER INTERNATIONAL AREAS

Hewlett-Packard Co.
Intercontinental Headquarters
3495 Deer Creek Road
PALO ALTO, CA 94304
Tel: (415) 857-1501
Telex: 034-8300
Cable: HEWPACK

15 Aug 1982 5952-6900

W9CR
BRYAN FIELDS

04945-90005

Printed In U.S.A.

4-4. TRANSMITTER LEVEL AND FREQUENCY TEST

Test Equipment Required

HP 3455A Digital Voltmeter
HP 5315A or HP 5316A Counter
HP 04945-62615 Test Amplifier (part of service kit)
600 ohm load
550 ohm resistor
Low Capacitance/Low Crosstalk Cables

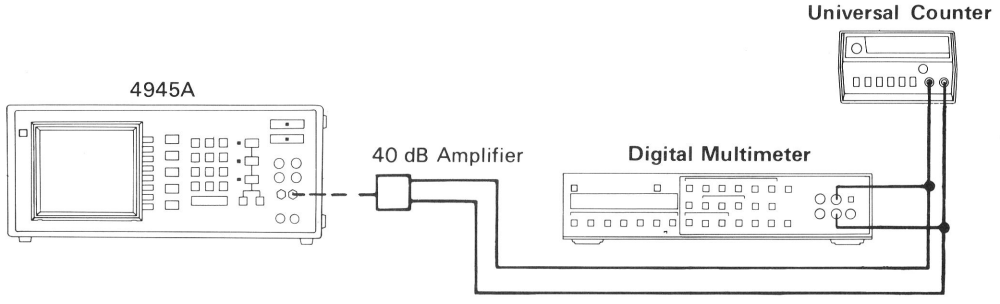

Setup Conditions

Connect the test equipment as shown above.

4945A:	Test Mode - Level/Frequency Transmit Impedance - 600 ohm
04945-62615:	variable, see table
3455A:	Function - AC volts Range - 1 volt (for best accuracy) 10 volt (for +13 dB measurement)
5315A/5316A:	Sample rate - maximum Below 10 kHz use 10 kHz low pass filter Adjust sensitivity for steady reading

Procedure

1. Check the 4945A output frequency accuracy at the five frequencies listed below. The accuracy at each frequency should be +-.01 %. Be sure to set the Test Amplifier to 0 dB.

Frequency Setting	Actual Reading
20 Hz	
200 Hz	
1004 Hz	
15 kHz	
110 kHz	

2. Check the 4945A output level flatness at the five levels listed in the table below. Check the five levels at each one of the five frequencies listed. Record your readings in the table below. The level specification for each frequency is given below each column of the table.

Transmitter Output Level Table

Note: The amplifier settings are used to make use of the 1 volt range of the 3455A, which is the most accurate.

		Frequency				
4945A Level	**Test Amp (Level)**	**20 Hz**	**200 Hz**	**1004 Hz**	**15 kHz**	**110 kHz**
+13 dB	0 dB (346 mV)					
0 dB	0 dB (775 mV)					
-20 dB	+20 dB (775 mV)					
-50 dB	+40 dB (245 mV)					
-60 dB	+40 dB (77.5 mV)					
	Spec.*	+-.5dB	+-.5dB	+-.2dB	+-.5dB	+-1dB

* Following are the specification values converted into volts.

+13 dB	+-.5 dB	=	3.266 to 3.665 volts
	+-.2 dB	=	3.381 to 3.541 volts
	+- 1 dB	=	3.084 to 3.882 volts
0 dB	+-.5 dB	=	.731 to .820 volts
	+-.2 dB	=	.757 to .792 volts
	+- 1 dB	=	.690 to .869 volts
-20 dB	+-.5 dB	=	.082 to .073 volts
	+-.2 dB	=	.079 to .075 volts
	+- 1 dB	=	.087 to .069 volts
-50 dB	+-.5 dB	=	.0026 to .0023 volts
	+-.2 dB	=	.0025 to .0024 volts
	+- 1 dB	=	.0027 to .0022 volts
-60 dB	+-.5 dB	=	.00082 to .00073 volts
	+-.2 dB	=	.00079 to .00075 volts
	+- 1 dB	=	.00087 to .00069 volts

4-5. TRANSMITTER LEVEL DISTORTION TEST

Test Equipment Required

HP 8903A Audio Analyzer

HP 04945-62615 Test Amplifier

Low Capacitance/Low Crosstalk Cables

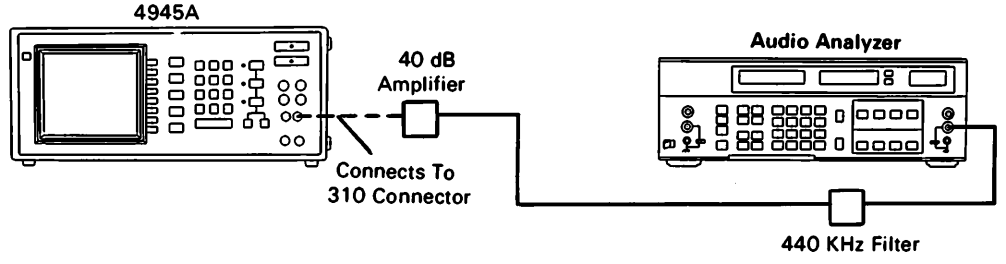

Setup Conditions

Connect the test equipment as shown above.

4945A:	Test Mode - Level/Frequency Transmit Impedance - 1200 ohm
8903A:	Measurement - Distortion Log/lin - log Input - Floating, high input with 600 ohm load Use 30 kHz LPF below 3 kHz Use 80 kHz LPF above 3 kHz
04945-62615:	Use only on measurements below -10 dB

Table 8-15. SA Program Loop 4

PCA: A12

Test Condition: Set A11TP2 to NORMAL position and remove A11JU602

A11S406 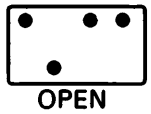 Position 4

OPEN

Signature Analyzer Connections on A11:				Checks:
START/STOP	ST2	TP1-3	Rising/Falling	A12 Main ROM
QUALIFIER	As noted below		Low Level	
CLOCK	CLK1	TP1-1	Rising	

+5 v reference = 1180 Note: Cycle power when changing qualifier

Qualifier= U100-20		Qualifier= U200-20	
U100 -11 =	1C64	U200 -11 =	50C5
12 =	A379	12 =	6F25
13 =	0CHH	13 =	A8A6
15 =	1UHA	15 =	9532
16 =	FUF3	16 =	8C60
17 =	U5FC	17 =	0938
18 =	A807	18 =	HF19
19 =	69CC	19 =	P899

Table 8-16. SA Program Loop 4:15

PCA: A12 Signatures take approx. 30 secs. to stabilize

Test Condition: Same as for loop 4 except:

A11S406 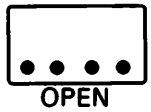 Position 15

OPEN

Signature Analyzer Connections on A11: same as for loop 4

Qualifiers= Same as for loop 4

Signatures= Same as for loop 4

Table 8-17. SA Program Loop 5

PCA: A12

Test Condition: Set A11TP2 to NORMAL position and remove A11JU602

A11S406 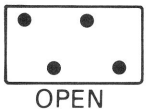 Position 5

OPEN

Signature Analyzer Connections on A11:				Checks:
START/STOP	ST2	TP1-7	Rising/Falling	ROM Banks 1 & 2
QUALIFIER	As noted below		Low Level	
CLOCK	CLK1	TP1-1	Rising	

+5 v reference = 1180 Note: Cycle power when changing qualifier

Qualifier= U300-20		Qualifier= U400-20	
U300 -11 =	C4C3	U400 -11 =	AC76
12 =	9CAP	12 =	AU97
13 =	AA28	13 =	FU6C
15 =	2A14	15 =	6989
16 =	A67A	16 =	3HC8
17 =	6296	17 =	P5U5
18 =	72CC	18 =	U361
19 =	26C7	19 =	H714

Table 8-18. SA Program Loop 5:15

PCA: A12 Signatures take approx. 30 secs. to stabilize

Test Condition: Same as for loop 5 except:

A11S406 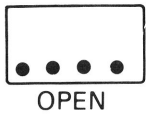 Position 15

OPEN

Signature Analyzer Connections on A11: Same as for loop 5

Qualifiers= Same as for loop 5

Signatures= Same as for loop 5

8-17. RECEIVER PROCESSOR

Table 8-34. A10 Free Run Loop A

PCA: A10

Test Conditions: Set A10S100(C1) to FREE RUN, A10S100(C2) to NORM

Signature Analyzer Connections on A10:				Checks:
START	A15	TP5	Rising	Receiver Address Bus
STOP	A15	TP5	Rising	Receiver Data Bus
CLOCK	PH2	TP3	Falling	Chip Select Circuit

+5 v reference = 0003

TP6 RD0 = 4HP1
TP7 RD1 = 447P
TP8 RD2 = 3AF3
TP9 RD3 = H29C
TP10 RD4 = 9485
TP11 RD5 = 1PA3
TP12 RD6 = 9595
TP13 RD7 = 4PU3

U103 - 7 = 2302
- 9 = F9CF
- 10 = 534H
- 11 = C9U1
- 12 = 1183
- 13 = 64HF
- 14 = 29A4
- 15 = 5FUA

U203 - 3 = 6F9A
- 5 = U759
- 7 = 0356
- 9 = 1U5P
- 12 = P763
- 14 = 8484
- 16 = FFFF
- 18 = UUUU

U403 - 5 = 9UP1
- 7 = 4868
- 9 = 4FCA
- 12 = 6U28
- 14 = 37C5
- 16 = 6321
- 18 = 7791

Table 8-35. A10 SA Program Loop B

PCA: A10

Test Condition: A10S100 (C1) to NORM, A10S100 (C2) to SA PROGRAM

Signature Analyzer Connections on A10:				Checks:
START	SA1	TP14	Falling	Shared RAM during
STOP	SA2	TP15	Falling	Receiver Access
CLOCK	PH2	TP3	Falling	

+5 v reference = 1CHH

TP6 RD0 = 2F20	U503 - 1 = 44AA	U503 - 14 = 7058
TP7 RD1 = 6CU3	2 = A3C9	15 = 59C5
TP8 RD2 = 3F37	3 = 07P1	16 = 1UCH
TP9 RD3 = PU4C	4 = U543	17 = 0418
TP10 RD4 = 360C	5 = APA5	18 = CUP5
TP11 RD5 = 6A8A	6 = 5U5A	19 = U18A
TP12 RD6 = A498	7 = P2C5	20 = 5U59
TP13 RD7 = C629	8 = 86H6	21 = 4484
	9 = 94C8	22 = F03P
	10 = 8AU9	23 = H690
	11 = PH8H	
	13 = P2CH	

Table 8-36. A10 SA Program Loop C

PCA: A10

Test Condition: A10S100 (C1) to NORM, A10S100 (C2) to SA PROGRAM

Signature Analyzer Connections on A10:				Checks:
START	SA1	TP14	Rising	ROM CD U507
STOP	SA2	TP15	Rising	
CLOCK	PH2	TP3	Falling	

+5 v reference = 07U3

TP6 RD0 = 109H
TP7 RD1 = 4AH5
TP8 RD2 = 4U84
TP9 RD3 = 29H5
TP10 RD4 = H01H
TP11 RD5 = 43C0
TP12 RD6 = 8UAU
TP13 RD7 = FAH6

Table 8-37. A10 SA Program Loop D

PCA: A10

Test Condition: A10S100 (C1) to NORM, A10S100 (C2) to SA PROGRAM

Signature Analyzer Connections on A10:				Checks:
START	SA2	TP15	Rising	ROM AB U407
STOP	SA3	TP16	Rising	
CLOCK	PH2	TP3	Falling	

+5 v reference = P7P2

TP6 RD0 = 08U3
TP7 RD1 = HHAU
TP8 RD2 = 166U
TP9 RD3 = 3HA1
TP10 RD4 = U211
TP11 RD5 = 85U2
TP12 RD6 = 74U9
TP13 RD7 = 8U6A

Table 8-38. A10 SA Program Loop E

PCA: A10

Test Condition: A10S100 (C1) to NORM, A10S100 (C2) to SA PROGRAM

Signature Analyzer Connections on A10:				Checks:
START	SA2	TP15	Falling	Receiver RAM U405
STOP	SA3	TP16	Falling	
CLOCK	PH2	TP3	Falling	

+5 v reference = 2903

TP6 RD0 = H227
TP7 RD1 = 34F0
TP8 RD2 = F4PF
TP9 RD3 = 0U7P
TP10 RD4 = 4877
TP11 RD5 = UA3A
TP12 RD6 = 6H20
TP13 RD7 = 41U6

Table 8-39. A10 SA Program Loop F

```
PCA: A10

Test Condition: A10S100 (C1) to NORM, A10S100 (C2) to SA PROGRAM

Signature Analyzer Connections on A10:          Checks:
    START       SA3       TP16     Falling      Stack RAM U505
    STOP        SA4       TP17     Falling
    CLOCK       PH2       TP3      Falling

+5 v reference = 2131
```

```
TP6  RD0 = 3AF1
TP7  RD1 = 92F9
TP8  RD2 = AFPA
TP9  RD3 = 4PAC
TP10 RD4 = 9C57
TP11 RD5 = H767
TP12 RD6 = H5A9
TP13 RD7 = 8308
```

Table 8-40. A10 SA Program Loop G

```
PCA: A10

Test Condition: A10S100 (C1) to NORM, A10S100 (C2) to SA PROGRAM

Signature Analyzer Connections on A10:          Checks:
    START       SA3       TP16     Rising       ROM 89 U308
    STOP        SA4       TP17     Rising
    CLOCK       PH2       TP3      Falling

+5 v reference = P733
```

```
TP6  RD0 = 0240
TP7  RD1 = 8UU3
TP8  RD2 = 80C8
TP9  RD3 = U06C
TP10 RD4 = 190F
TP11 RD5 = 38U1
TP12 RD6 = 222C
TP13 RD7 = 3U08
```

Table 8-41. A10 SA Program Loop H

PCA: A10

Test Condition: A10S100 (C1) to NORM, A10S100 (C2) to SA PROGRAM

Signature Analyzer Connections on A10:				Checks:
START	SA4	TP17	Rising	ROM 67 U307
STOP	SA5	TP18	Rising	
CLOCK	PH2	TP3	Falling	

+5 v reference = 251A

TP6 RD0 = 54H9
TP7 RD1 = 3543
TP8 RD2 = 7203
TP9 RD3 = 0A9F
TP10 RD4 = 65PA
TP11 RD5 = 28C1
TP12 RD6 = C246
TP13 RD7 = 06PF

Table 8-42. A10 SA Program Loop I

PCA: A10

Test Condition: A10S100 (C1) to NORM, A10S100 (C2) to SA PROGRAM

Signature Analyzer Connections on A10:				Checks:
START	SA4	TP17	Falling	Receiver Peirpheral
STOP	SA5	TP18	Falling	Data Bus
CLOCK	PH2	TP3	Falling	Receiver Peripheral Address Bus REN, LREN, RR/W

+5 v reference = APU2

U500 - 5 = 1446

U600 - 4 = 1CC6

U605 - 7 = 10HU
9 = UC20
12 = PAH3
14 = 96H1
16 = U413
18 = 1143

U700 - 8 = C544

U705 -11 = H4AA
12 = 2422
13 = 4300
14 = PC65
15 = F5A0
16 = 49F1
17 = 0422
18 = 8077

Table 8-43. A10 SA Program Loop J

PCA: A10

Test Condition: A10S100 (C1) to NORM, A10S100 (C2) to SA PROGRAM

Signature Analyzer Connections on A10:				Checks:
START	SA5	TP18	Rising	ROM 45 U306
STOP	SA6	TP19	Rising	
CLOCK	PH2	TP3	Falling	

+5 v reference = 672A

TP6 RD0 = 32F3
TP7 RD1 = U2A0
TP8 RD2 = F369
TP9 RD3 = U707
TP10 RD4 = 8P28
TP11 RD5 = U2C7
TP12 RD6 = C9C0
TP13 RD7 = 0839

8-18. INTERFACE TROUBLESHOOTING

Free Run I/O Troubleshooting

1. Plug the I/O module into Port 2. Set All S406 to an SA Program Loop position (Any position from 1-15).

2. Connect the signature analyzer as specified in the appropriate I/O module's Free Run SA table.

3. Switch the 4945A ON.

4. Remove the data bus jumper on the I/O module:
   JU501 on the 18162A
   JU201 on the 18163A
   JU403 on the 18165A

5. The following signals must be correct in order to perform SA on any of the I/O modules. Check for the signals listed below on the appropriate I/O module.

Signal Function	RS-232	HP-IB	HP-IL	Signal Conditions
XTAL freq	U401-2, 3	U301-2, 3	U501-2, 3	4 MHz
Addr. bit 15	U401 - 20	U301 - 20	U501 - 20	4.36 MHz
0	U401 - 40	U301 - 40	N/A	2 MHz
R/W	U401 - 7	U301 - 7	U501 - 7	High
Reset	U401 - 6	U301 - 6	U501 - 6	High
System Int.	U401 - 30	U301 - 30	U501 - 30	High
I/O Int.	U401 - 12	U301 - 12	U501 - 12	High

6. For all I/O modules, take the signatures listed under the appropriate Free Run SA Loop table to verify the I/O processor kernel.

   For RS-232 Only:
   If any of the data bus signatures are bad on JU201, remove RAM U202. With the power OFF, reinstall JU201, then switch the power ON and remove JU201. Take the signatures given in the W/O RAM column to determine if the RAM was causing the failure.

7. If no bad signatures are found, the problem could still be the input latch, output latch, address decoder or the status latch.

   The Free Run mode used during Free Run SA does not exercise all circuits. Check for stuck bits on the parts mentioned above, especially if error codes 820 through 824 or 920 through 924 are generated.

8. If the failure persists, refer to the specific I/O module troubleshooting procedure.

HP-IB Free Run SA Loop

PCA: 18162A

Test Condition: Board All S406 in any position 1-15
18162A jumper JU501 removed AFTER power on.

Signature Analyzer Connections:

START	U301-20	A15	Rising Edge
STOP	U301-20	A15	Rising Edge
CLOCK	U301-8	DS	Rising Edge

+5 v Reference = 0001 * = Not blinking

JU501- 1 = 6090
2 = 9865
3 = 966P
4 = FP83
5 = 7H7C
6 = 5U7C
7 = U685
8 = 87H9

U502- 2 = UUUU
5 = 5555
6 = CCCC
9 = 7F7F
12 = 5H21
15 = OAFA
16 = UPFH
19 = 52F8

U301-13 = HC89
14 = 2H70
15 = HPPO
16 = 1293
17 = HAP7
18 = 3C96
19 = 3827

U604- 4 = 4H79
5 = 5FU8
6 = 1181
7 = 4H79

U503- 3 = 0001*
5 = 0001*
6 = 0001*

HP-IB SA Loop A

PCA: 18162A

Test Condition: 18162A plugged into Port 2 of the 4945A.
Board All S406 in any position 1-15.
18162A jumper JU501 removed AFTER power on.

Signature Analyzer Connections:

START	U301-20	A15	Rising Edge
STOP	U301-20	A15	Rising Edge
CLOCK	U301-8	DS	Rising Edge

+5 v Reference = 0001 * = Not blinking

JU501- 1 = F2HF
2 = 5ACF
3 = 9U2U
4 = 66PC
5 = 25UA
6 = CC77
7 = H609
8 = 8P41

U502- 2 = UUUU
5 = 5555
6 = CCCC
9 = 7F7F
12 = 5H21
15 = OAFA
16 = UPFH
19 = 52F8

U301-13 = HC89
14 = 2H70
15 = HPPO
16 = 1293
17 = HAP7
18 = 3C96
19 = 3827

U604- 4 = 4H79
5 = 5FU8
6 = 1181
7 = 4H79

U503- 3 = 0001*
5 = 0001*
6 = 0001*

RS232 Free Run SA Loop

PCA: 18163A

Test Condition: 18163A plugged into Port 2 of the 4945A.
Board All S406 in any posiotion 1-15.
Remove JU201 on 18163A AFTER power on.

Signature Analyzer Connections:

START	U401-20	A15	Rising Edge
STOP	U401-20	A15	Rising Edge
CLOCK	U401-8	DS	Rising Edge

+5 v Reference = 0001 * = Not Blinking

With RAM

JU201- 1 = A9C6
2 = 4290
3 = 33U8
4 = F6P9
5 = 23AP
6 = 76C6
7 = P69F
8 = 46H3

W/O RAM

JU201- 1 = A021
2 = 4290
3 = 3A6U
4 = F6P9
5 = 23AP
6 = 76C6
7 = P69F
8 = 46H3

U303- 2 = UUUU
5 = 5555
6 = CCCC
9 = 7F7F
12 = 5H21
15 = OAFA
16 = UPFH
19 = 52F8

U401-13 = HC89
14 = 2H70
15 = HPPO
16 = 1293
17 = HAP7
18 = 3C96
19 = 3827

U403-20 = AUPP

U502- 7 = 4P0A
10 = 0996
11 = 0000

U503- 1 = 0001*
3 = 0001*
6 = 0996
11 = 0000
12 = 0000*

U504-12 = 0000
13 = 0001

HP-IL Free Run SA Loop

PCA: 18165A

Test Condition: 18165A plugged into Port 2 of the 4945A.
Board All S406 in any position 1-15.
18165A Jumper JU403 removed AFTER power on.

Signature Analyzer Connections:

START	U501-20	A15	Rising Edge
STOP	U501-20	A15	Rising Edge
CLOCK	U501-8	DS	Rising Edge

+5 v Reference = 0001 * = Not Blinking

JU403-11 = HAC7
12 = 99A7
13 = F736
14 = U6CH
15 = 6U2F
16 = 5443
17 = 0AF8
18 = 591P

U501-13 = HC89
14 = 2H70
15 = HPPO
16 = 1293
17 = HAP7
18 = 3C96
19 = 3827

U503- 2 = UUUU
5 = 5555
6 = CCCC
9 = 7F7F
12 = 5H21
15 = OAFA
16 = UPFH
19 = 52F8

U302- 4 = 4H79
5 = 5FU8
6 = 1181
7 = 4H79

U504- 3 = 0001*
6 = 0001*
8 = 0000
10 = 0000*

RS-232 Troubleshooting

1. Plug the RS-232 module into Port 2 and connect an RS-232 jumper connector (1251-0063) configured for loop back, to the interface RS-232 connector. (See Figure below).

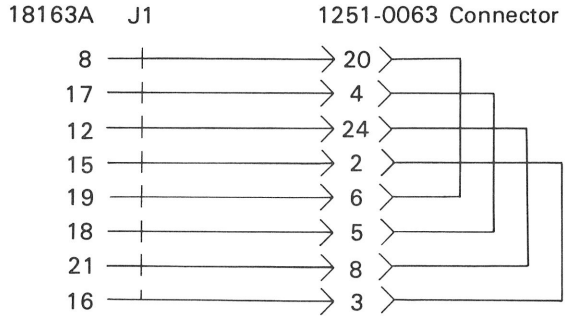

1251-0063 RS232 Loop Back Connector

2. Switch the 4945A power ON.

3. After the power-on tests are completed, set All S406 to an SA Program loop position (Any position 1-15).

4. Press the All Reset switch. The RS-232 module should now be in the loop back mode. Check the following signals on the serial I/O chip. Frequencies listed are approximate.

Check	Signal
U102 - 35 (MR)	Low
U102 - 16 (XTAL)	2 MHz
U102 - 30 (INTRPT)	Low
U102 - 14 (CS2)	45 kHz
U102 - 18 (DOSTR)	22 kHz
U102 - 2 (DISTR)	250 kHz

5. Check the RS-232 waveforms to verify the loop back path.

6. If all the above checks are good, the serial I/O chip may still be bad.

HP-IL Troubleshooting

1. Plug the HP-IL module into Port 2 and connect an HP-IL cable (8120-3383) to the interface HP-IL connector.

2. Switch the 4945A power ON.

3. After the power-on tests are completed, set All S406 to an SA Program loop position (Any position 1-15).

4. Press the All Reset switch. The HP-IL module should now be in the loop back mode. Check the following signals on the the HP-IL chip. Frequencies listed are approximate.

Check	Signal
U101 - 23, 24 (LC1,LC2)	475 to 550 nsec period
U101 - 27 (WR)	8 kHz
U101 - 26 (RD)	300 kHz
U101 - 28 (CS)	8 kHz

5. Check the HP-IL waveforms.

6. If all the above checks are good, the HP-IL chip may still be bad.

HP-IB Troubleshooting

1. Plug the HP-IB module into Port 2 and connect the SA meter to take the HP-IB SA Loop A signatures.

2. Switch the 4945A power ON.

3. After the power-on tests are completed, set A11 S406 to an SA Program loop position (Any position 1-15).

4. Press the A11 Reset switch. HP-IB SA loop A should now be executing, however check the following signals first. Frequencies listed are approximate.

Check	Signal
U101 - 9 (INT)	High
U101 - 19 (Reset)	High
U101 - 3 (CE)	45 kHz
U101 - 4 (WE)	45 kHz
U101 - 5 (DBIN)	45 kHz
U101 - 18 (O)	2 MHz
U202 - 2 (CLK for SA)	10 kHz
U202 - 3 (ST/SP for SA)	85 Hz

5. Take the signatures listed in the HP-IB SA Loop A. If all signatures are good, it is still possible that the HP-IB chip is bad.

   Note: There is a potential ESD problem with U102 and U202. If these parts are failing, this could be the cause.

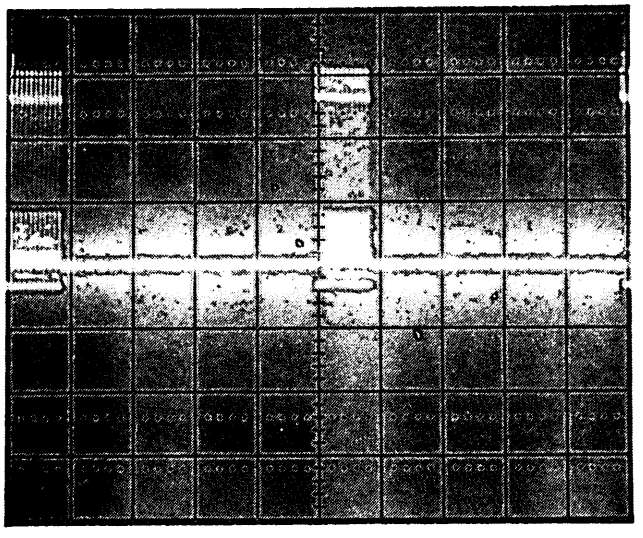

U101 - 18, T200 - 4

Horiz - 50 usec/div
Vert - 2 V/div

The period between bursts is 250 usec. Each burst is 48 usec.

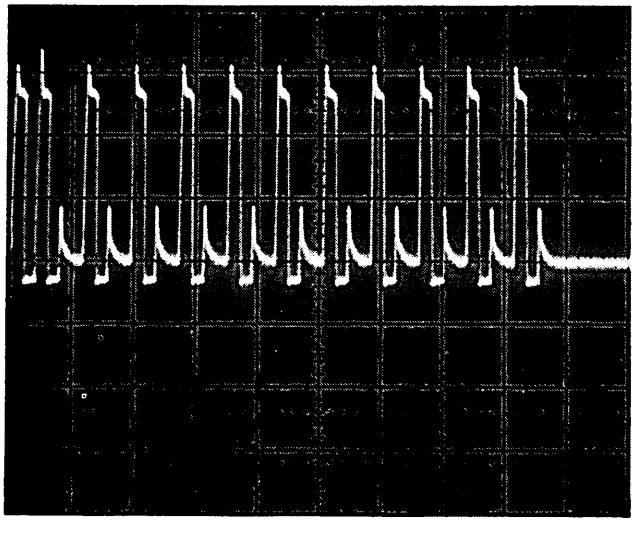

The following photo shows the burst expanded.

Horiz - 5 usec/div
Vert - 2 V/div

12 pulses per burst with a low time between pulses of 1 usec.

Paths 9 thru 12 (Data Segments 11 thru 14)

A .775 Vrms signal (at the frequency listed below) from A15 is sent to the A4 input multiplexer. The frequency is measured on A8 using the wideband channel. The frequency is generated on A14 using latch address 4.

Path	Frequency
9	15 Hz
10	240 Hz
11	3840 Hz
12	61440 Hz

Check A15 TP2 for a sine wave at the appropriate frequency, 6.6 volts p-p (See Figure Mode 8 - 1).

Check A15 TP3 for a stair-step approximation of the sine wave (Same as Figure Mode 3 - 2).

Following is a summary of the control latch outputs for each Mode 8 segment.

	A14 U803							
Segment	pin 2	pin 5	pin 6	pin 9	pin 12	pin 15	pin 16	pin 19
1 thru 4	LOW	LOW	HIGH	LOW	HIGH	LOW	LOW	LOW
6 thru 14	HIGH	LOW	HIGH	LOW	HIGH	LOW	LOW	LOW

<u>For all segments</u>:

A14 U501 pin 1 is 524 kHz

A14 U501 pin 4 is LOW

A14 U501 pin 10 is 1.048 MHz

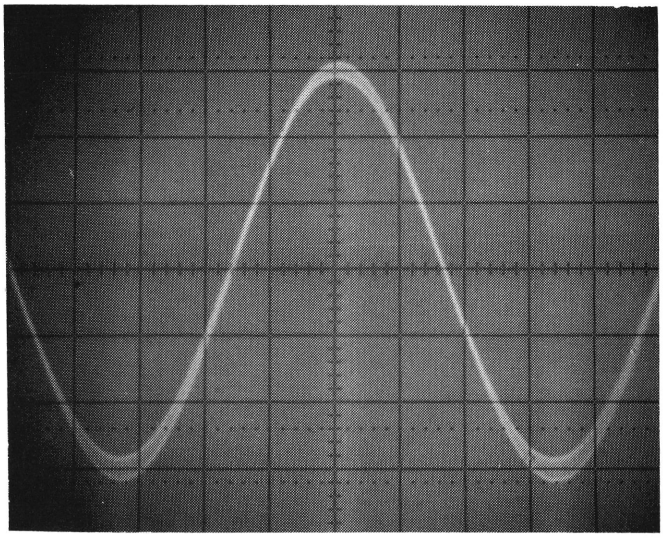

Vert: 1 V/div
Horiz: depends on frequency

Figure Mode 8-1

Figure 8-9. Mode 8 Waveforms

8-29. MODE 9: Transmitter Filter Sweep (A15)

This mode connects the A15 self test signal output to the A4 input multiplexer. Two frequencies are applied to the two A15 low pass filters and three frequencies are applied to the A15 IMD band-pass filter. These signals are at a .775 Vrms level. The level of each frequency is measured at the filter output to verify the filter performance. Errors in the midband gain and errors in the filter shapes should show up as level errors. Frequency errors indicate severe filter distortion or failure to pass the signal.

Following is a summary of the Mode 9 tests.

Data Segment	Test	Results Displayed	Path
1	2500 Hz	2500 +- 0	1
2	0.0 dBm	0.0 +- .5	1
3	10000 Hz	10000 +0/-1	2
4	-18.0 dBm	-18 +- 1	2
5	not used		
6	1200 Hz	1200 +- 0	3
7	1.5 dBm	+1.5 +- .5	3
8	4800 Hz	4800 +- 0	4
9	-21.0 dBm	-21 +- 1	4
10	not used		
11	500 Hz	500 +- 0	5
12	-30.0 dBm	-30 +- 2	5
13	1120 Hz	1120 +- 0	6
14	0.0 dBm	0.0 +- .5	6
15	1600 Hz	1600 +- 0	7
16	-9.0 dBm	-9 +- 1	7

General Mode 9 Troubleshooting

If all paths fail, the fixed gain offset may be wrong. Try adjusting the output level adjustment on A15.

If one or more of the paths fail, the corresponding filter is bad.

If only paths 5, 6 and 7 fail, the two adjustments in the IMD filter may need adjusting to correct the response curve.

Following is a description of the Mode 9 paths.

Path 1 (Data Segments 1 and 2)

A 2500 Hz, .775 Vrms sine wave is sent through the A15, 5 kHz low pass filter and then input to the A4 input multiplexer. The level is measured with the full wave average wideband detector and the frequency is measured on A8.

Check A15 U102 pin 6 for a 2500 Hz sine wave, 6.3 volts p-p. This is the filter input.

Check A15 U103 pin 1 for a 2500 Hz sine wave, 12.4 volts p-p. This is the filter output. The same signal should be on A15 TP2.

Check A15 U607 pin 6 for a 2500 Hz sine wave, 2.2 volts p-p. This verifies the analog switches and the fine attenuator.

Path 2 (Data Segments 3 and 4)

A 10000 Hz, .775 Vrms sine wave is sent through the A15, 5 kHz low pass filter and then input to the A4 input multiplexer. The level is measured with the full wave average wideband detector and the frequency is measured on A8.

Check A15 U102 pin 6 for a 10000 Hz sine wave, 6.3 volts p-p. This is the filter input.

Check A15 U103 pin 1 for a 10000 Hz sine wave, 1.5 volts p-p. This is the filter output. The same signal should be on A15 TP2.

Check A15 U607 pin 6 for a 10000 Hz sine wave, 0.27 volts p-p. This verifies the analog switches and the fine attenuator.

Path 4 (Data Segments 8 and 9)

A 2500 Hz, .775 Vrms sine wave is sent through the A15 FSK low pass filter and input to the A4 input multiplexer. The level is measured with the A4 full wave average wideband detector and the frequency is measured on A8.

Check the alternate channel output at A15 U306 pin 6. It should be a stair-step approximation of the 2500 Hz sine wave, 6.3 volts p-p (Similar to Figure Mode 3 - 2). This signal may be quite noisy, but the steps can still be seen.

If this waveform is good, verify the FSK low pass filter by checking for an 1200 Hz, 5.7 volt p-p sine wave at A15 U406 pin 6 and at A15 U506 pins 3 and 4. Check for ground at A15 U506 pins 8 and 9.

If this waveform is bad, check the data lines to the alternate channel DAC (A15 U205). The pins listed below should toggle at TTL levels and at the rates shown.

U205 pin 5	2 kHz
U205 pin 6	6 kHz
U205 pin 7	14 kHz
U205 pin 8	30 kHz
U205 pin 9	62 kHz
U205 pin 10	126 kHz
U205 pin 11	152.6 kHz
U205 pin 12	148.6 kHz

If one or more of the lines do not toggle, suspect the alternate channel data latch U303.

If none of the lines toggle, check the alternate channel clock output at A15 U601 pin 8. The clock should be 524 kHz. If not, suspect U601 or U303.

If all the lines into U205 are toggling at the proper rates, then suspect either U205 or U306.

8-31. MODE 11: Wideband Filter Calibration (A2)

A gain constant is generated for the PAR, Program and C-message filters on A2. The A17 test signal (ST17) is routed through the appropriate A2 filter, through the A4 wideband autorange and then to the FWA detector. A reference measurement is made with no A2 filter to determine the absolute level variation. This reference value is subtracted from all filter measurements. The measured A2 filter constants are stored in non-volatile RAM on the A12 board.

NOTE

This mode is a calibration only mode and not intended for troubleshooting. Mode 12 provides more information if one of the filters fail. If mode 11 fails, mode 12 should also fail.

Following is a summary of the Mode 11 tests.

Data Segment	Test	Results Displayed	Path
1	1300 Hz, 0 dBm (600) PAR	0.0 +-1.0 dB	1
2	1004 Hz, 0 dBm (600) PRGM	0.0 +-1.0 dB	2
3	1004 Hz, 0 dBm (600) CMSG	0.0 +-1.0 dB	3
4 thru 16	not used		

Following is a description of the Mode 11 paths.

Path 1 (Data Segment 1)

The PAR filter constant is tested. The gain in dB at 1300 Hz is measured and stored.

Check A2 TP1, TP2 and TP3 for a 1300 Hz sine wave, 2.2 volts p-p (.775 Vrms).

Path 2 (Data Segment 2)

The program filter constant is tested. The gain in dB at 1004 Hz is measured and stored.

Check A2 TP PRO and TP1 for a 1004 Hz sine wave, 2.2 volts p-p (.775 Vrms).

Path 3 (Data Segment 3)

The C-message filter constant is tested. The gain in dB at 1004 Hz is measured and stored.

Check A2 TP CMSG and TP1 for a 1004 Hz sine wave, 2.2 volts p-p (.775 Vrms).

Path 15

The gain at 1300 Hz is measured with the transient bandpass filter switched in.

Check A4 U901 pin 8 for a 1300 Hz sine wave, 1.05 volts p-p (.54 Vrms).

Check A4 U901 pin 1 for a 700 Hz sine wave, 2.8 volts p-p (0.98 Vrms).

8-34. MODE 14: A1 and A18 Check

This mode tests the amplifier, attenuators, input stage and terminations on A1 and the output stage and RTL bridge on A18. Segments 1, 2 and 3 use the A17 test signal as the signal source. The other segments use the two-wire return loss path from the transmitter. The signal is then routed through A2 (no filters), A4 (wideband autorange) and A5 (FWA wideband detector). Since the transmit signal from the return loss bridge has not been tested, the termination test is also an A18 output check.

Following is a summary of the Mode 14 tests.

All tests use a 1000 Hz transmit frequency.

Data Segment	Results Displayed	Test	Path
1	0.0 +-1.0 dB	0.0 dBm (600) 0 Atten	1
2	0.0 +-0.5 dB	-20 dBm (600) 20dB Amp	2
3	-20.0 +-0.5 dB	0.0 dBm (600) 20 Atten	3
4	-15.7 +-0.5 dB	0.0 dBm (600) 135 Ohm	4
5	-11.3 +-0.5 dB	0.0 dBm (600) 600 Ohm	5
6	-10.7 +-0.5 dB	0.0 dBm (600) 900 Ohm	6
7	-10.4 +-0.5 dB	0.0 dBm (600) 1200 Ohm	7
8	-0.2 +-0.5 dB	0.0 dBm (600) Bridge	8
9	-12.4 +-0.5 dB	0.0 dBm (600) 900 Ref	9

10 thru 16 not used

Path 6

This path is identical to Path 4 except the receiver is terminated with 900 ohms. Check the termination value and the switching relays if this segment fails.

Check A1 TP3 for a 1000 Hz sine wave, .315 volts p-p (.110 Vrms).

Path 7

This path is identical to Path 4 except the receiver is terminated with 1200 ohms. Check the termination value and the switching relays if this segment fails.

Check A1 TP3 for a 1000 Hz sine wave, 0.40 volts p-p (.140 Vrms).

Path 8

This path is identical to Path 4 except the receiver input is bridged. The bridging impedance is assumed to be 200 k-ohms. That is why the nominal value for this path is -0.2 dBm instead of 0.0 dBm.

Check A1 TP3 for a 1000 Hz sine wave, 2.15 volts p-p (.755 Vrms)

Path 9

The return loss bridge output is terminated with 600 ohms at the receiver and the tip and ring of the transmitter are opened. This allows the level measurement to be influenced by the 900 REF resistor. Check the reference resistor and capacitor if this path fails.

Check A1 TP3 for a 1000 Hz sine wave, 0.20 volts p-p (0.07 Vrms).

8-35. MODE 15: IMD Hardware Check (A3)

This mode tests the A3 circuits. The signal is routed from A17 through A2 (with no A2 filters in) and through A3 where the signal can be picked off from the mixer input or after the 520 Hz bandpass filter. The A4 wideband autorange is used and the signal is detected with the A5 FWA wideband detector. Frequency is measured on A8.

Following is a summary of the Mode 15 tests.

Data Segment	Results Displayed	Test	Filter	Path
1	-25 / -90 dB	1380 Hz, 0 dBm(600)	Notch	1
2	-25 / -90 dB	860 Hz, 0 dBm(600)	Notch	2
3	-30 / -90 dB	2940 Hz, 0 dBm(600)	Notch	3
4	-30 / -90 dB	3280 Hz, 0 dBm(600)	Notch	4
5	5.0 +-1.0 dB	490 Hz, 0 dBm(600)	BPF	5
6	5.4 +-1.0 dB	520 Hz, 0 dBm(600)	BPF	6
7	4.9 +-1.0 dB	550 Hz, 0 dBm(600)	BPF	7
8	5.4 +-1.0 dB	520 Hz, -30 dBm(600)	Mixer	8
9	1.7 +-1.0 dB	1900 Hz, 0 dBm(600)	Mixer	9
10	520 +-1 Hz	1900 Hz, 0 dBm(600)	Mixer	9
11	3.1 +-1.0 dB	2240 Hz, 0 dBm(600)	Mixer	10
12	520 +-1 Hz	2240 Hz, 0 dBm(600)	Mixer	10
13	see Note	No detect/detect at 1380 Hz		1
14	see Note	No detect/detect at 860 Hz		2
15, 16	not used			

Note: For data segments 13 and 14:

0 = no tones detected
1 = 1380 Hz tone detected
2 = 860 Hz tone detected
3 = both tones detected

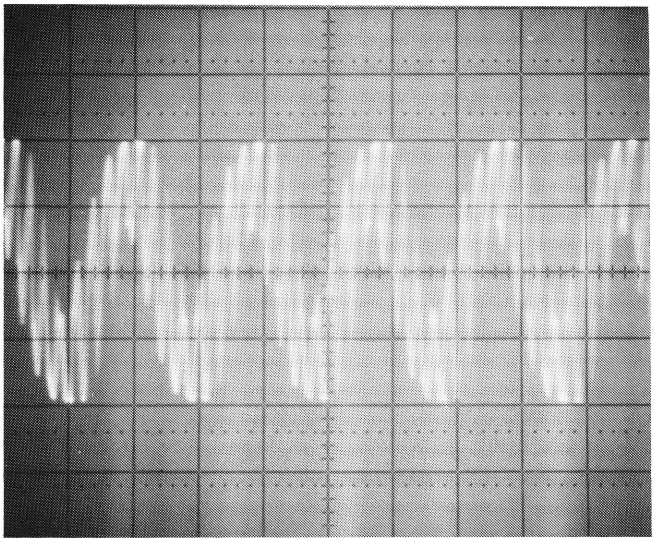

Vert: 1 V/div
Horiz: depends on frequency

Figure Mode 15-1

Figure 8-10. Mode 15 Waveforms

8-36. MODE 16: IMD Filter Calibration (A3)

This mode tests the gain constant of the three bandpass filters used in IMD. There is actually only one bandpass filter which is preceded by the A3 mixer. The mixer can generate a 520 Hz component from a 1900 or 2240 Hz signal. The resultant 520 Hz component has an amplitude proportional to the 1900 or 2240 Hz signal (depending on the mixing signal). Thus, there are three different gain constants for the same filter.

The transmit signal is sent from A17 to the A2 input multiplexer, through A2 on the IMDI line to A3. The signal level is measured with the wideband autorange and the rms detector. All level measurements are made relative to the level measured when the appropriate frequency tone is sent from A2 directly to the wideband autorange (bypassing A3).

This mode, like Mode 11, is for calibration only and provides the same information given by Mode 15, data segments 6, 9 and 11.

Following is a summary of the Mode 16 tests.

Data Segment	Results Displayed	Test	Filter	Path
1	5.4 +-1.0 dB	520 Hz, 0.0 dBm(600)	520 Hz BPF	1
2	1.7 +-1.0 dB	1900 Hz, 0.0 dBm(600)	1900 Hz BPF	2
3	3.1 +-1.0 dB	2240 Hz, 0.0 dBm(600)	2240 Hz BPF	3

4 thru 16 not used

Following is a description of the Mode 16 paths.

Path 1

The level of the reference 520 Hz signal is subtracted from the level of the 520 Hz signal passed through the 520 Hz bandpass filter on A3 with the mixer frequency set to 0 Hz.

Check A4 TP5 for a 520 Hz sine wave, 4.3 volts p-p (1.1 Vrms).

8-39. MODE 19: Envelope Delay Hardware Check (A7)

This mode attempts to verify the A7 hardware and its accuracy. A transmit signal from A17 is sent to the A4 input multiplexer. The signal is sent through the A4 wideband amplifier to A7 where it goes through the HI-Q filter and then to the A5 FWA wideband detector.

Be sure to run Mode 2 (detector calibration) before running this mode.

If inconsistent calibration data is used (e.g., default calibration constants), this mode is sensitive enough to have errors occur. This sensitivity is due to the fact that the A7 output signals route directly to A5 with no autoranging done.

Following is a summary of the Mode 19 tests.

Data Segment	Results Displayed	Transmit Signal	Test	Path
1	7.9 +- 2.0 dB	EDD CAL, 9 dBm(600)	HI-Q/CAL	1
2	11.1 +- 2.0 dB	41.75 Hz, 0 dBm(600)	HI-Q/AGC	2
3	0.0 +-0.5 dB	41.75 Hz, 5 dBm(600)	HI-Q/AGC	3
4	-7.0 +-1.0 dB	41.0 Hz, 0 dBm(600)	HI-Q	4
5	-6.0 +-1.0 dB	42.25 Hz, 0 dBm(600)	HI-Q	5
6	-14.5 +-1.5 dB	40.75 Hz, 0 dBm(600)	TUNING	6
7	not used			
8	1.3 +-2.0 dB	2000 Hz, -34 dBm(600)	FSK BPF	7
9	-3.5 +-1.0 dB	1845 Hz, -34 dBm(600)	FSK BPF	8
10	-3.5 +-1.0 dB	2166 Hz, -34 dBm(600)	FSK BPF	9
11	not used			
12	0 +12000/-0 usec	ED/1 kHz, 0 dBm(600)	Delay	10
13	3000 +-30 usec	ED/1 kHz 0 dBm(600)	Delay	10
14	3000 +-30 usec	ED/1 kHz 0 dBm(600)	Delay	10
15	3000 +-30 usec	ED/1 kHz 0 dBm(600)	Delay	10
16	3000 +-30 usec	ED/1 kHz 0 dBm(600)	Delay	10

General Mode 19 Troubleshooting

The filter sweeps for the A7 board are not like any other mode. The HI-Q filter tunes itself to any signal within +-5 Hz of 83 1/3 Hz. To measure the frequency response, the self tuning feature must be disabled. However, disabling the self tuning does not lock the filter in a stable configuration.

When the full mode is being run, the filter first tunes itself then paths 2 through 6 are performed.

When only one segment is being run, the filter goes through a 5 second tuning period followed by a 5 second test period to keep the filter from drifting.

In the first four paths, the test is attempting to establish the same path as when the jumper at the top of the board is placed in the CAL position.

The 2 kHz BPF is a special case because it preceeds the AGC in the filter path. A signal level that is too low for the AGC to amplify correctly must be applied to insure a constant gain through the AGC. An envelope delay signal is used because only the amplitude of the modulation is measured. The change in modulation level does not correspond directly to the filter attenuation of the different carrier frequencies because the modulation sidebands have different weightings depending on where it falls on the filter characteristic.

If paths 2 through 6 fail, suspect filter misadjustment, bad tuning FET, slow optoisolator, filter component failures, bad integrator and misplaced jumpers.

Following is a description of the Mode 19 paths.

Path 1 (Data Segment 1)

The EDD calibration signal from A14 is sent to the HI-Q input via the analog switch on A7. The HI-Q output is connected to the FWA wideband detector. This checks the modulation level and the HI-Q center frequency gain. The cal signal is attenuated 12.5 dB on A7.

Check the following points on A7 for an 83.3 Hz sine wave.

Check A7 JU10 for 1.46 volts p-p (0.5 Vrms).

Check A7 TP207 for 2.9 volts p-p (1 Vrms).

Check A7 TP106 for 5.9 volts p-p (2 Vrms).

Check A7 TP1 for 2.85 volts p-p (1 Vrms).

Check A7 TP2 for 5.4 volts p-p (1.87 Vrms).
(Occasional blinking of signal)

Check A7 TP100 for a tuning voltage of 4.08 volts dc.

Converter Read

The contents of the converter circuit can be read while the counters are in operation. The state of the comparator in the converter circuit can also be read by the processor. This comparator output is the most significant bit of the converter output. This bit indicates that the input signal is greater than the DAC output.

During a convertor read, the U505 bits have the following meaning.

Bit 8 is high if the input signal is greater than the signal level programmed into the DAC.

Bit 7 is the Up/Down bit to programmable counter. This output is high if the counter is counting up.

Bit 6 is the Enable count bit to programmable counter. This output is low if the counter is enabled.

Bit 5 is the board presence bit and is grounded.

Bits 4-1 are the most significant bits of converter circuit output.

U405 holds the eight least significant bits of converter circuit output.

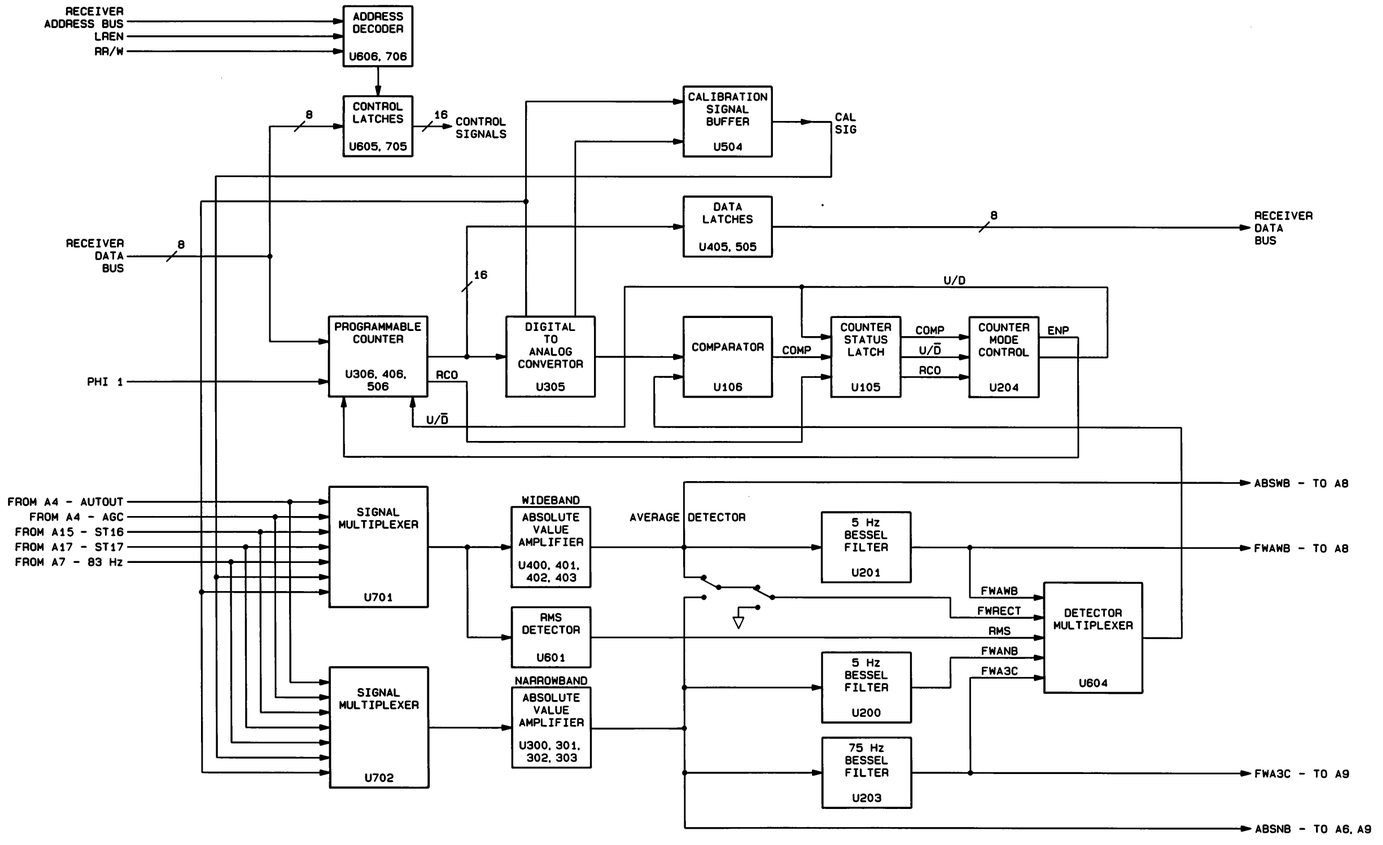

Figure 8-32. A5 Detector Block Diagram

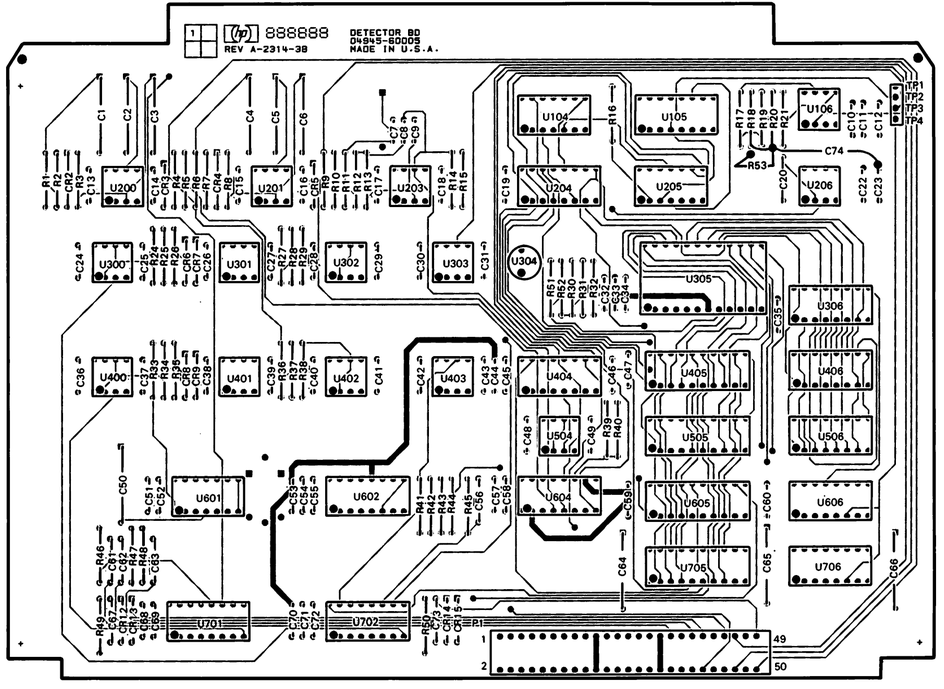

04945-60005 O-9/83 REV. A-2314

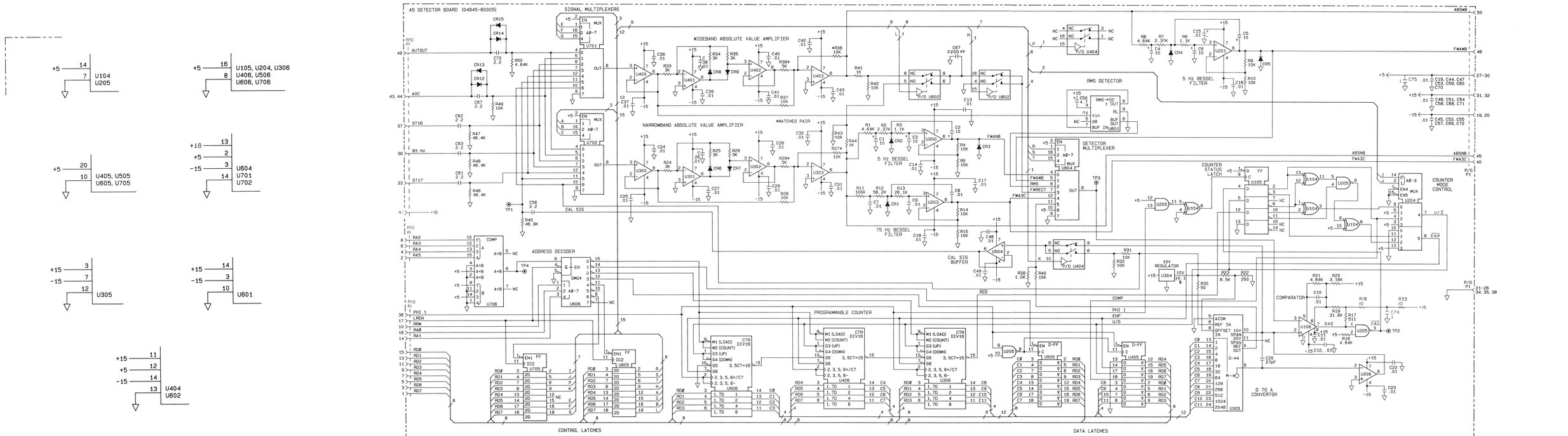

Figure 8-33. A5 Detector Schematic Diagram

8-62. Jitter (A6)

The Jitter board is used to make amplitude and phase jitter measurements. Amplitude jitter is unwanted amplitude modulation and phase jitter is unwanted phase modulation. Jitter measurements are made by sending a pure 1004 Hz signal over a communications channel and measuring the modulation accompanying the tone as it is received. The 1004 Hz tone is generated by the Transmitter board (A18). The Jitter board is used to recover the modulation from the received signal.

Interfering signals on a telephone line most likely to cause amplitude or phase jitter are the 20 Hz ringing tone with its harmonics and the 60 Hz power line with its harmonics. Modulation components at frequencies above 300 Hz are rare, and when they do occur, they are normally accompanied by components at lower frequencies. In an effort to reduce the effects of "out-of-band" noise on the measurement accuracy, the received signal is first passed through a 600 Hz to 1400 Hz band pass filter on the A2 board before reaching A6.

Amplitude and phase jitter are measured in three frequency bands: 4 to 20 Hz, 20 to 300 Hz and 4 to 300 Hz. Amplitude and phase measurements can be made separately or simultaneously in any one or in all three frequency bands. Phase jitter is expressed in degrees and amplitude jitter is expressed in percent.

Phase jitter is measured by first passing the received signal through a sine-to-square wave convertor (zero-crossing detector). The output is a TTL compatible square wave which is sent to a phase demodulator. The output of the phase demodulator goes through a low pass filter and an analog-to-digital converter where it is converted to digital form to be read and interpreted by the receiver microprocessor (A10).

Amplitude jitter is measured by feeding a full-wave rectified version of the input signal to an amplitude demodulator on A6. The amplitude demodulator consists of a high pass filter. To measure the demodulated AM level relative to the carrier, the carrier level is always adjusted to beat a set level before the demodulated AM is measured. The carrier level is set by using the fine attenuator on A4.

Sine-to-Square Wave Converter

U708, U606 and their associated discrete parts make up the sine-to -square wave converter. The auto-ranged input signal is input on pins 43 and 44 of P1. Any dc component is removed by the high pass filter C58, C59 and R78. CR9 and CR10 provide overvoltage protection for U708. After auto ranging, the signal level at the input to U708 is .75 to 2.50 volts rms. The input signal is applied to U708, a two stage differential amplifier, and then to U606, a high-gain comparator. The comparator output is a TTL compatible square wave. The square wave level transitions coincide with the zero crossings of the sine wave input.

When a rapid gain hit occurs, one of the thresholds is exceeded because the RC network slows the reference voltage generator's response to the change. This causes the comparator output to go low and the transients processor to detect the hit at the buffer output. Once the hit has been detected, switch U705 opens so that the reference voltage stays fixed at its old level until the hit qualifies. When the hit either qualifies or fails to qualify, both of the U705 switches are closed to quickly re-establish reference with the new level. After the appropriate blanking interval, the second switch is reopened and the cycle begins again. The long RC time constant is specified by the dynamic response characteristic outlined by the IEEE specifications and the short RC time constant (with both switches closed) must be less than 6 ms in order to count gain hits at 100 counts per second.

Phase Hit Detector

Phase hits are detected by a digital pulse width measuring circuit coupled with an analog phase-locked loop. The .775 V rms sine wave input (AGC) is squared (U405), shifted to TTL levels and then divided by two (U505) before application to the phase detector (U704). The divide by two is essential in keeping the loop stable over a full 360 degree phase range. The phase detector is an exclusive OR gate that compares the input signal to a loop feedback signal. The phase detector output is a pulse that goes to a data selector (U406). In normal operation, the divided input signal from U704 is selected. The second U406 input is selected to see if a phase hit qualifies. This signal is the undivided loop feedback signal. The TTL signal from U406 is level shifted to equal + and - levels which are applied to a loop lowpass filter U606. The low-pass filter gives a loop bandwidth of 100 radians per second. The filter output drives the voltage-controlled oscillator U605. Q8 and Q9 linearize the VCO's response to phase. The VCO operates at four times the input frequency. The VCO output goes to a divide by two circuit (U506) which changes the VCO output to a square wave. This is also where the loop feedback signal comes from. Q5 is used to correct the VCO output signal.

The output of U506 goes to another phase detector (U704) where it is compared with the undivided input signal from U305. The resulting pulse (phase difference) goes through a limiting circuit (Q1, Q2 and Q3) to limit large phase hits. The signal goes through a low pass filter which passes the dc value of the phase detector. This dc value is proportional to the phase offset. The phase detector phase offset goes to comparator U104. Here it is compared to a dc reference that is set by the transients processor. This dc reference is the phase limit set from the front panel.

Phase hit outputs from U104 are sent on bit 7 of the transients data bus.

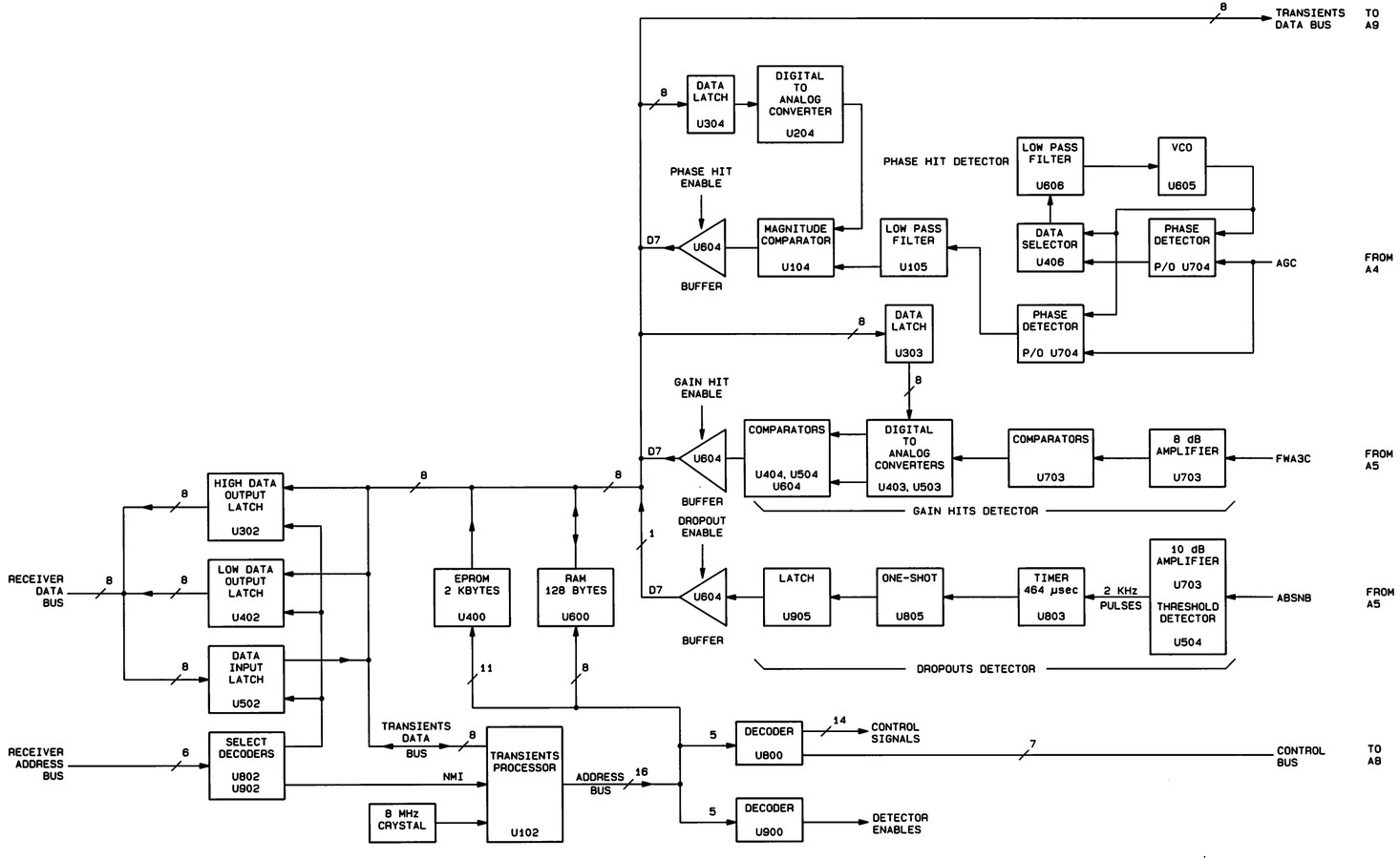

Figure 8-40. A9 Transients Detector Block Diagram

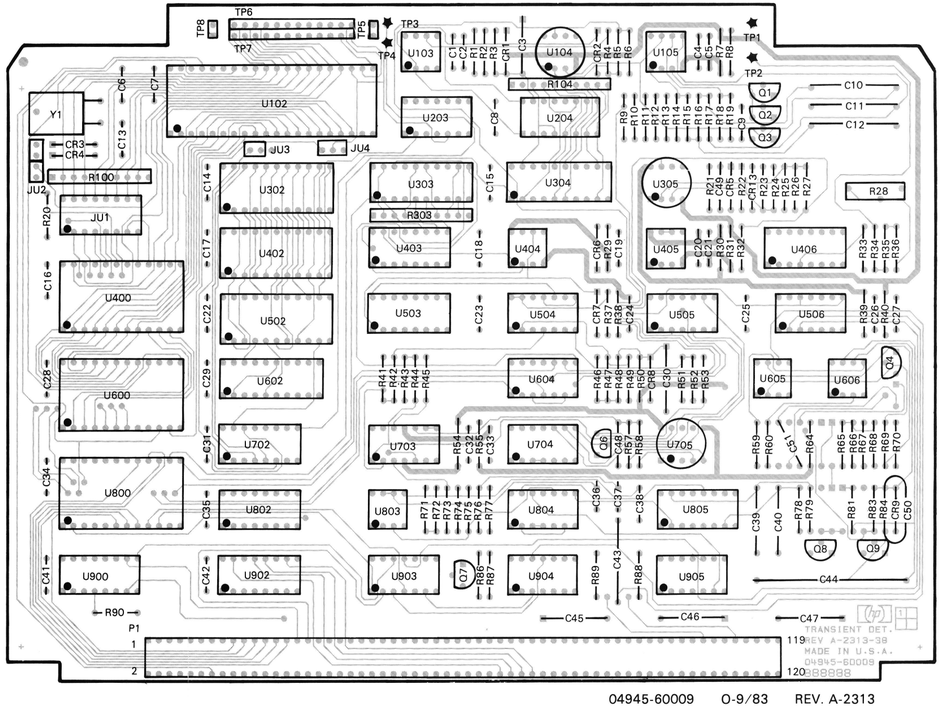

04945-60009 O-9/83 REV. A-2313

8-70. Active Output (A17)

Control signals on the system data bus from the system processor are latched by U608. These signals control the analog switches. The switches control the attenuation, the talk battery and quiet termination. There is 80 dB of attenuation available in 10 dB steps.

The Talk Battery is a 15V supply which is routed to the user's handset through the switching on A18. For Quiet Termination, the transmission path is opened after the attenuators and the tip and ring are also grounded.

After the attenuator (U409), the signal goes to a buffer, U407. U309 and U310 convert the single ended signal into a balanced differential signal. It also provides a large impedance to ground both differentially and in common mode.

The differential voltage from U309 and U310 is applied to a voltage to current converter (Q1, Q2, Q4, Q11, Q14 and Q15). This is an isolation stage and it creates the differential floating output. The bias for this stage is created by Q10 and CR3. At near dc levels, the output of the convertor looks like low impedance. At high frequencies the converter feedback loop (U306) is non-functional and the converter looks like high impedance. Over the instrument's frequency range, the output impedance of the converter varies with the frequency. The current output from this stage is converted back to a voltage by amplifiers U405 and U406.

The amplifiers are powered by an isolated, floating power supply. The transmitter output is floating within this +-15 volt window. Protection diodes on the transmitter output lines (AOT, AOR) protect the transmitter circuits against transient voltages more than +-100 volts.

Floating Supply

The +- 15 volt floating supply inputs come from the +- 40 volt supply on the A21 board.

This supply provides clean, isolated voltages to the transmitter output stage. Q8 acts as a current source and Q9 acts as a current sync. CR12 ensures that there is always a 30 volt differential at the output, even though the actual voltages may be +-15 volts.

Q5, Q6, Q12 and Q13 provide feedback to keep the +-15 volt outputs (30 volt differential) within the limits of the +-40 volt input.

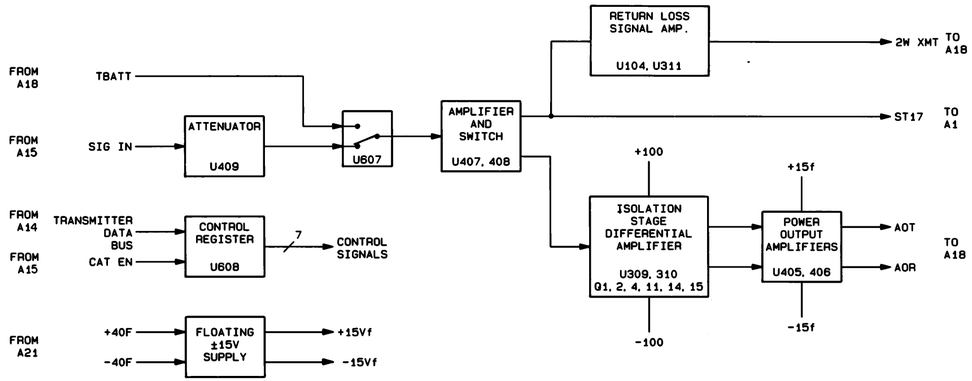

Figure 8-46. A17 Active Output Block Diagram

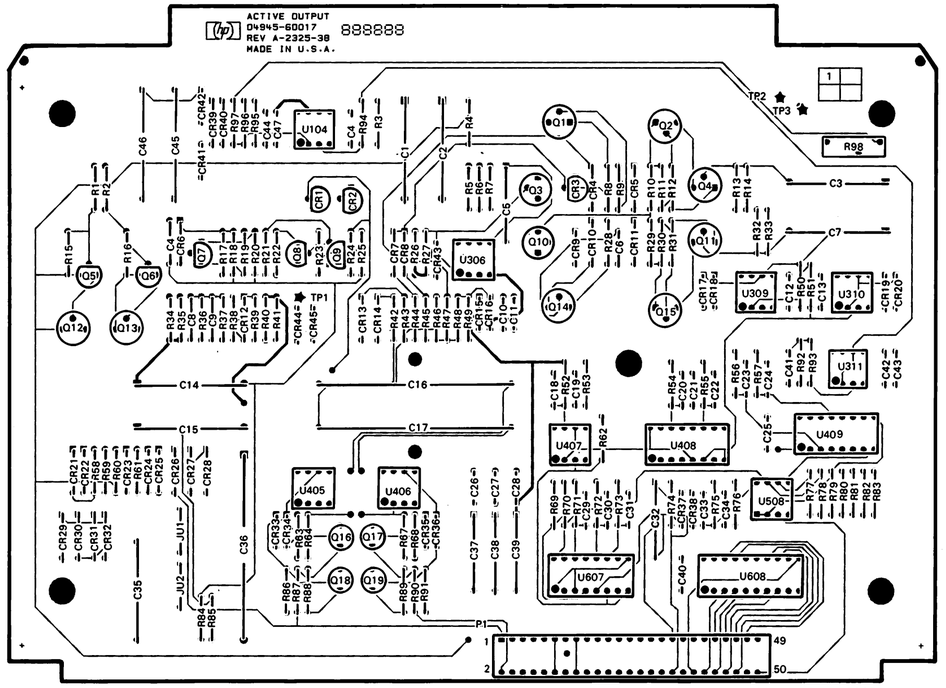

04945-60017 O-9/83 REV. A-2325

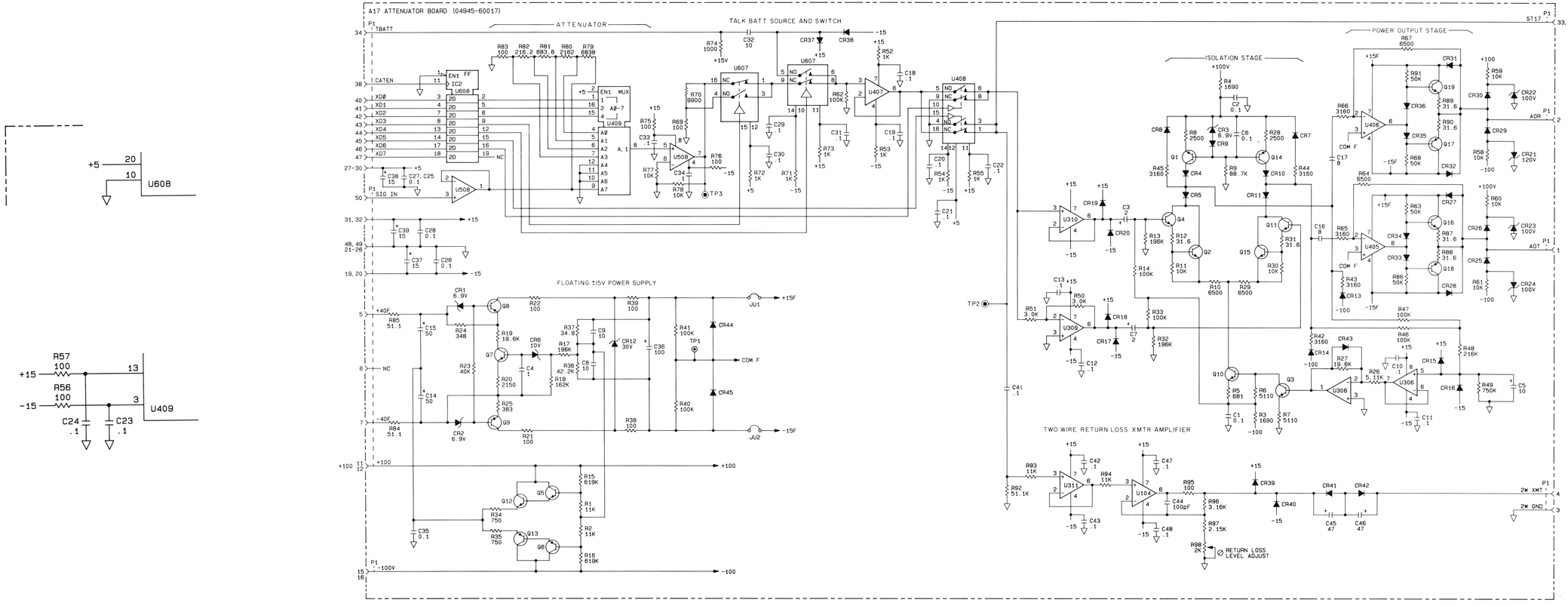

Figure 8-47. A17 Active Output Schematic Diagram

8-71. Transmitter Output (A18)

Line terminations of 135, 600, 900 and 1200 ohms can be selected for the transmitter output.

The AOT and AOR inputs are from the current booster stages on A17 which have an extremely low output impedance (approximately 0 ohms). Therefore AOT and AOR look like a short circuit.

For a 1200 ohm impedance, relay K304 is closed and K305 is opened putting R11 and R15 in series (600 ohms each). For 600 ohms, K304 is opened which puts R13 and R17 in parallel with R11 and R15 For 900 ohms, K305 is closed to put 3.6 K ohms (R14, R18) in parallel with 1.2 K ohms. For 135 ohms, K304 and K305 are closed to put 151 ohms in parallel with 1.2 K ohms.

K306 is used to put either the return loss bridge or the termination impedances onto the tip and ring connectors.

K302 shorts the tip and ring for return loss calibration. This produces a 0 dB return loss. The return loss is read by the 4945A receiver and any deviation is calibrated out by software.

K303 selects one of the standard return loss impedances (600 or 900 ohm) in series with a 2.16 UF capacitor.

K301 controls whether the return loss bridge is using one of the standard impedances or the external reference impedance.

K307 switches in the dc blocking capacitors when one of the internal references are used.

Dial talk and talk battery options are controlled by K308 and K309. When dial talk is used, voice is connected directly to the 4945A front panel jacks. The voice signal comes in to A18. K308 and K309 are set up so that the voice goes directly out on the tip and ring. When using the talk battery option, the handset is energized with 15 Vdc which is generated on A17 (TBATT). The voice signals now take a more indirect route before going out on the tip and ring.

The transmit hold coil circuit is switched in by K310.

The relay switching is controlled by control information coming to the A18 board on the transmit data bus (XD0 thru XD7). The transmit data bus is buffered by U504. The bus information is decoded by U501, U502 and U503. The decoder outputs are sent to the bases of driver transistors which are turned on to either set or reset a relay. The relays are the type that require a set or reset signal to change states. The relay stays in the position that the last drive signal set it to.

The two I/O connectors are also part of A18. This part of A18 is discussed in the I/O section.

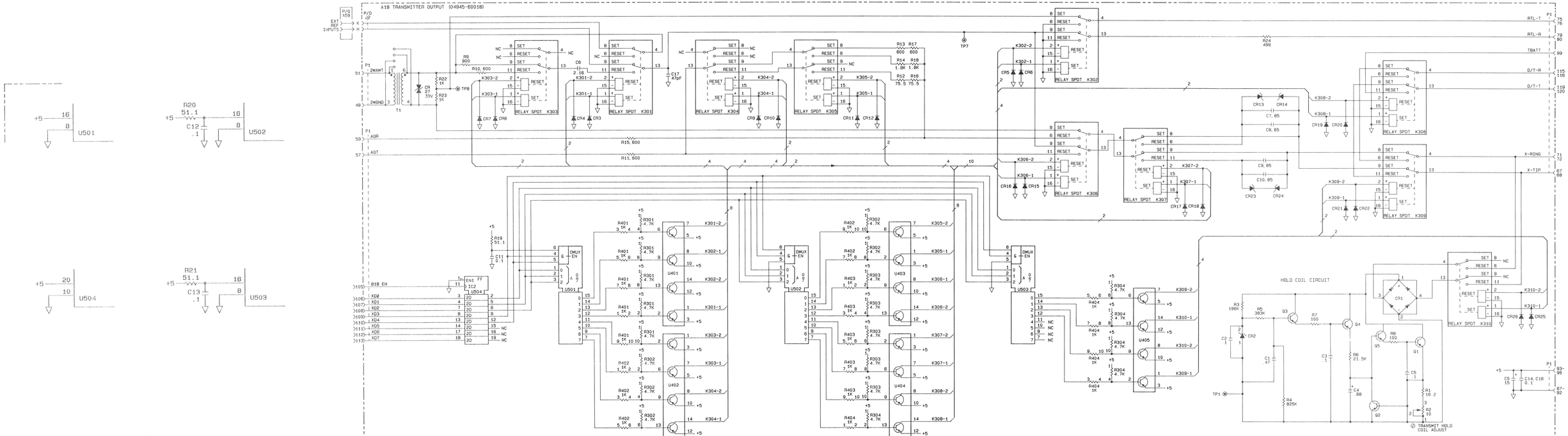

Figure 8-49. A1B Transmitter Output Schematic Diagram

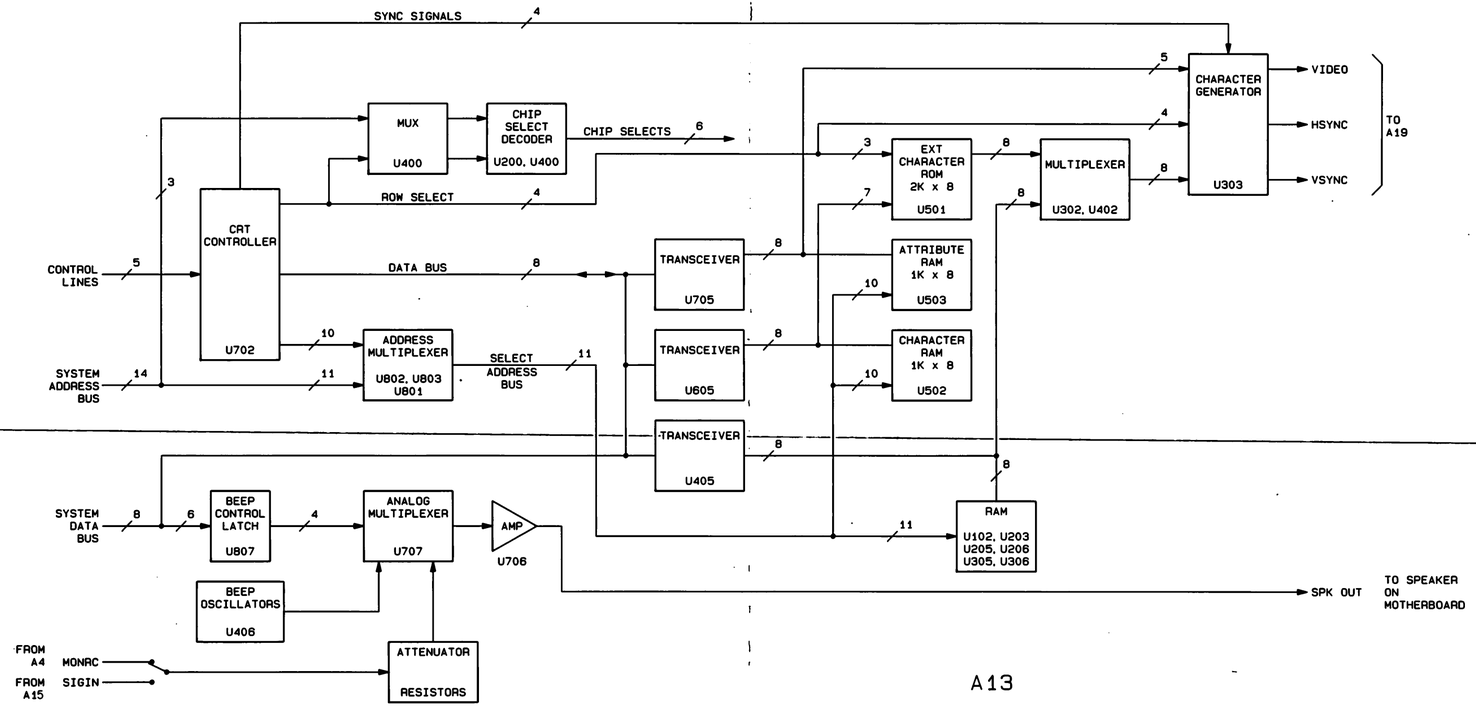

A13

Figure 8-50. A13 Video Generator Block Diagram

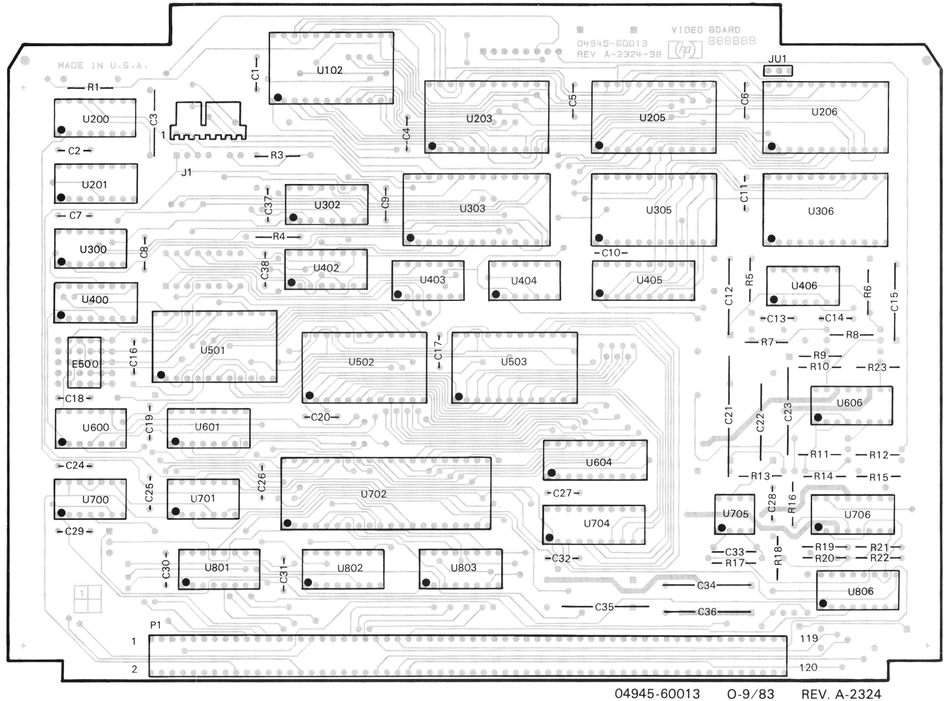

04945-60013 O-9/83 REV. A-2324

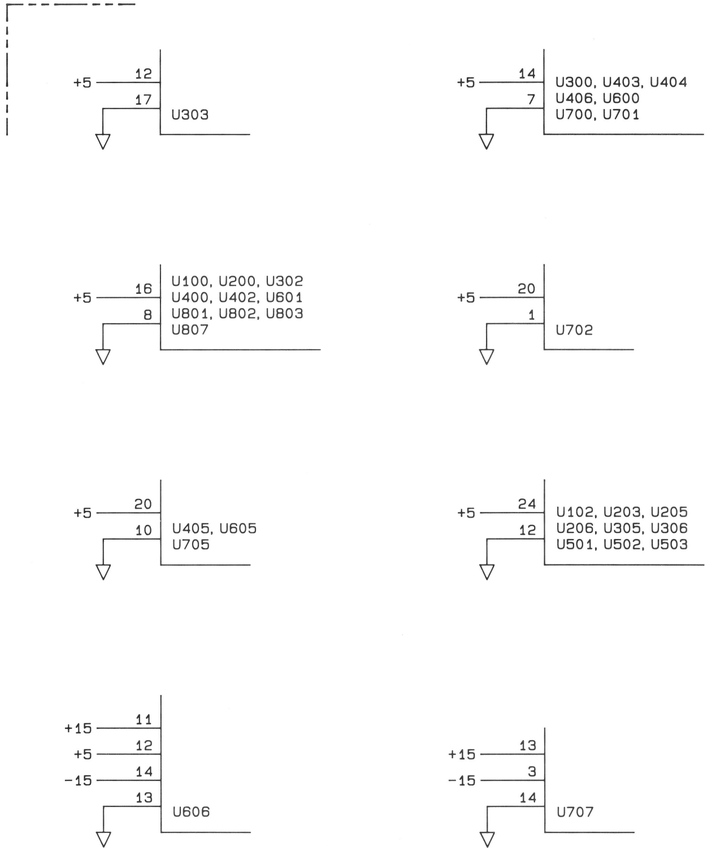

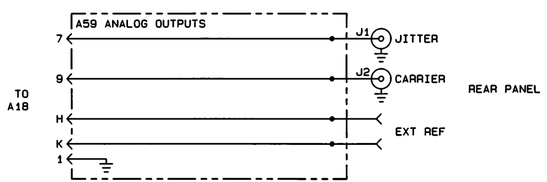

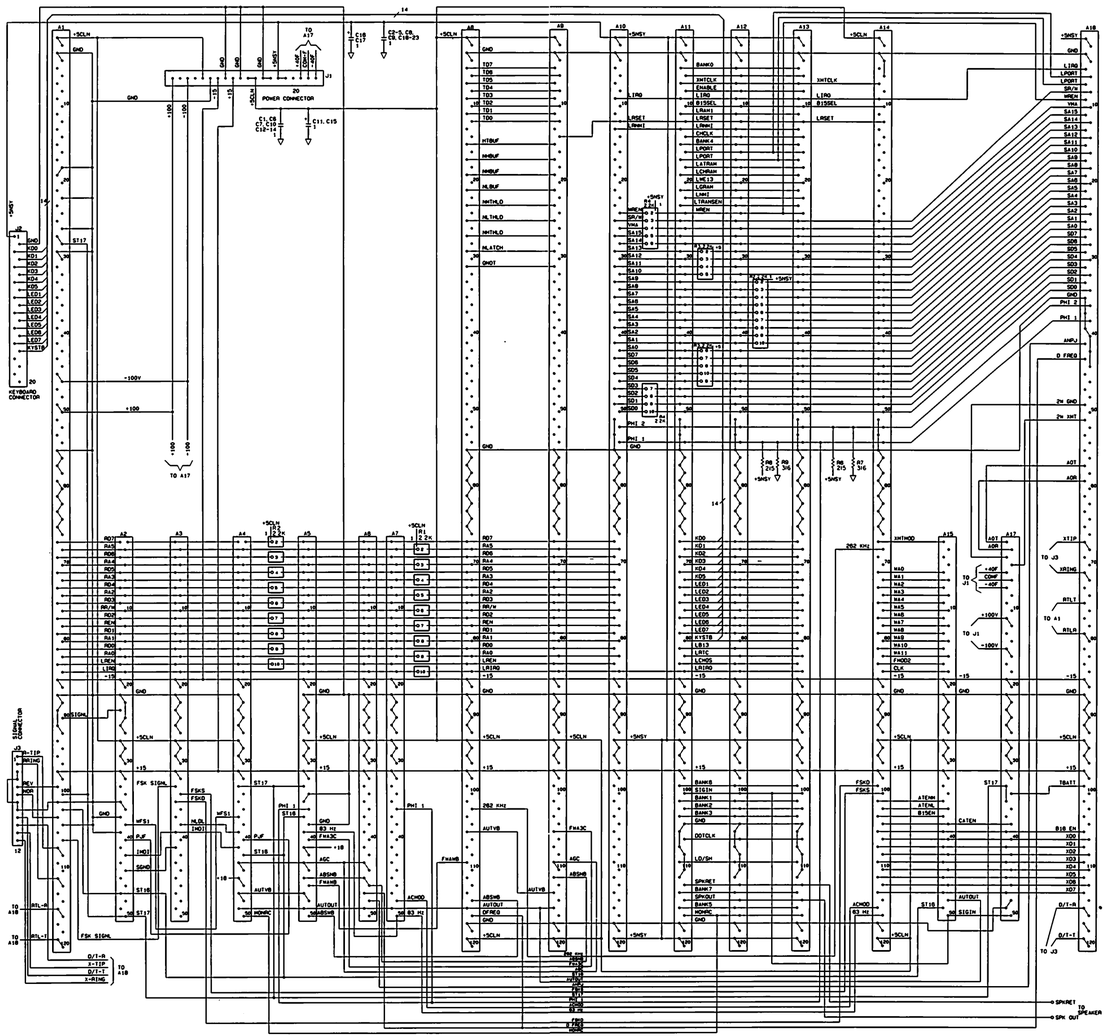

Figure 8-57. A22 Motherboard Schematic Diagram

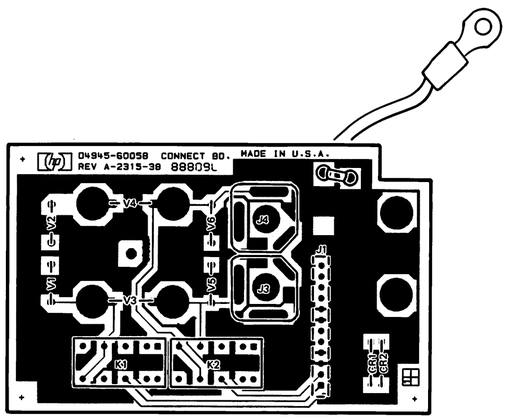

04945-60058 O-9/83 REV. A-2315

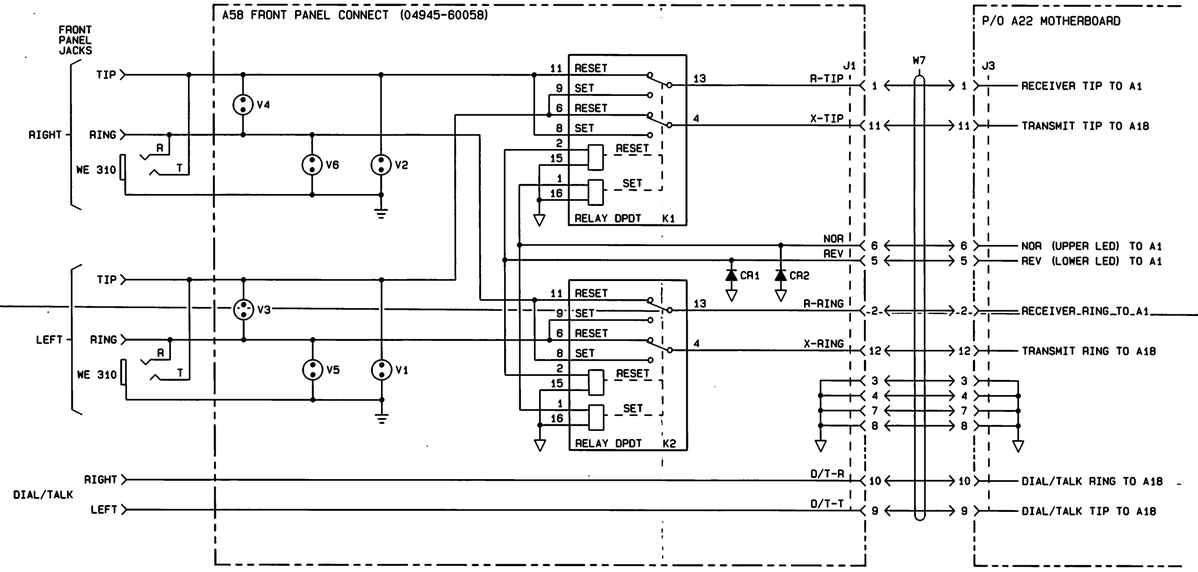

Figure 8-58. A58 Front Panel Connect Schematic Diagram

8-79. Power Supply Test Fixtures

There are two test fixtures that can be used to isolate power supply problems. Both of these items are in the 04945-62607 Service Kit.

- Passive Loading Board (04945-60062)
- Power Supply Test Fixture (04945-62608)

Passive Loading Board

The passive loading board can be plugged into any card cage slot to simulate the power supply load. The load presented by this board is the minimum required for the power supplies to operate properly.

Refer to Figure 8-59 for the passive loading board schematic diagram and parts list.

Power Supply Test Fixture

The power supply test fixture lets you test the power supply boards isolated from the rest of the instrument.

The test fixture provides the proper ac input voltages and the proper loads for the power supply voltages.

Refer to Figure 8-60 for the power supply test fixture schematic diagram and parts list.